PL #10

Playing with PWM

Series and parallel resistor circuits

Using PWM

Pulse Width Modulation

- Pulse Width Modulation, or *PWM*, is a technique for getting analog results with digital means.

Pulse Width Modulation

- Digital control is used to create a square wave.

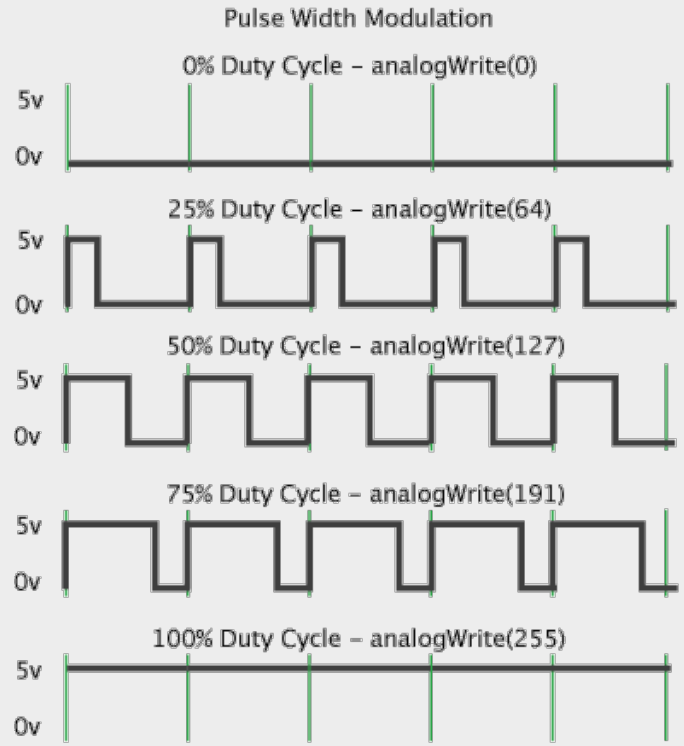

Pulse Width Modulation

- A signal is switched between on and off.

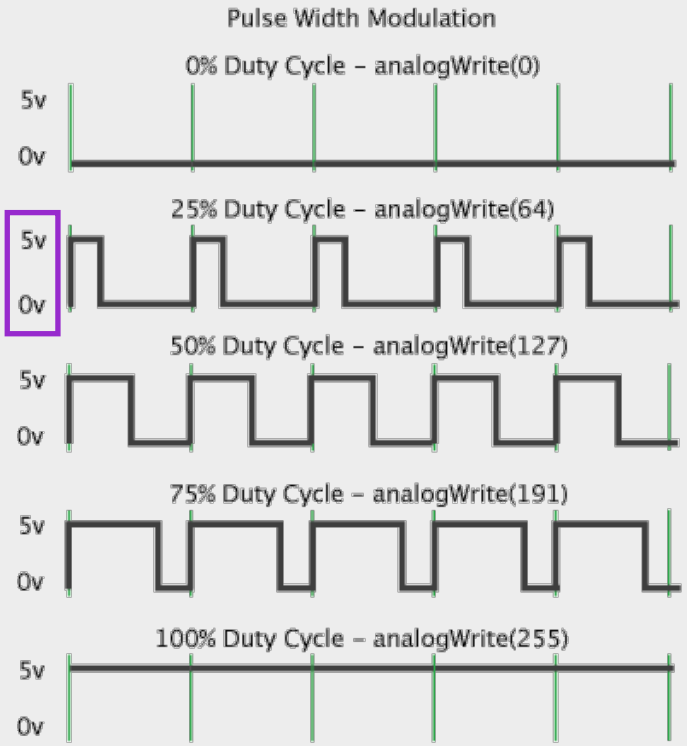

Pulse Width Modulation

- This on-off pattern can simulate voltages in between full on (5 Volts) and off (0 Volts)

By changing the portion of the time the signal spends on versus the time that the signal spends off.

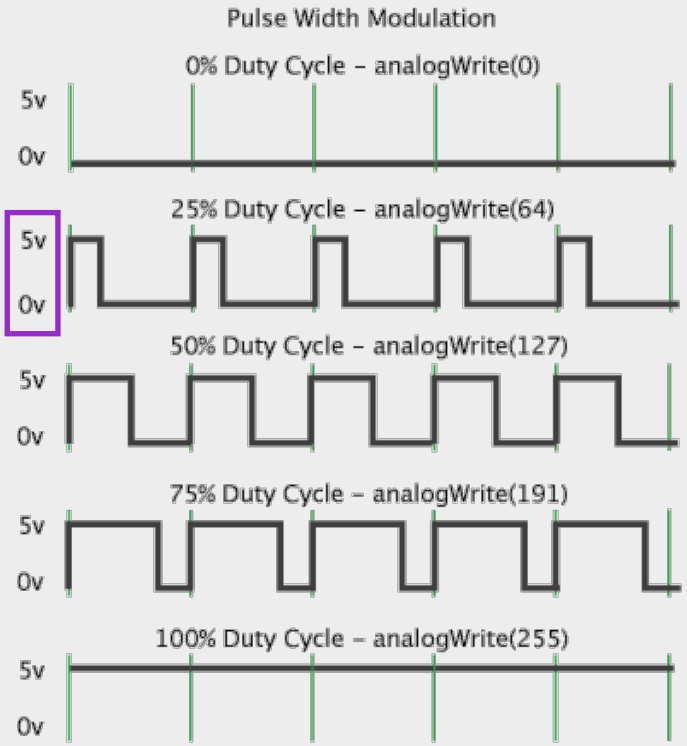

Pulse Width Modulation

- The duration of "on time" is called the *pulse width*.

  To get varying analog values, you change, or modulate, that pulse width.

pulse width

pulse width

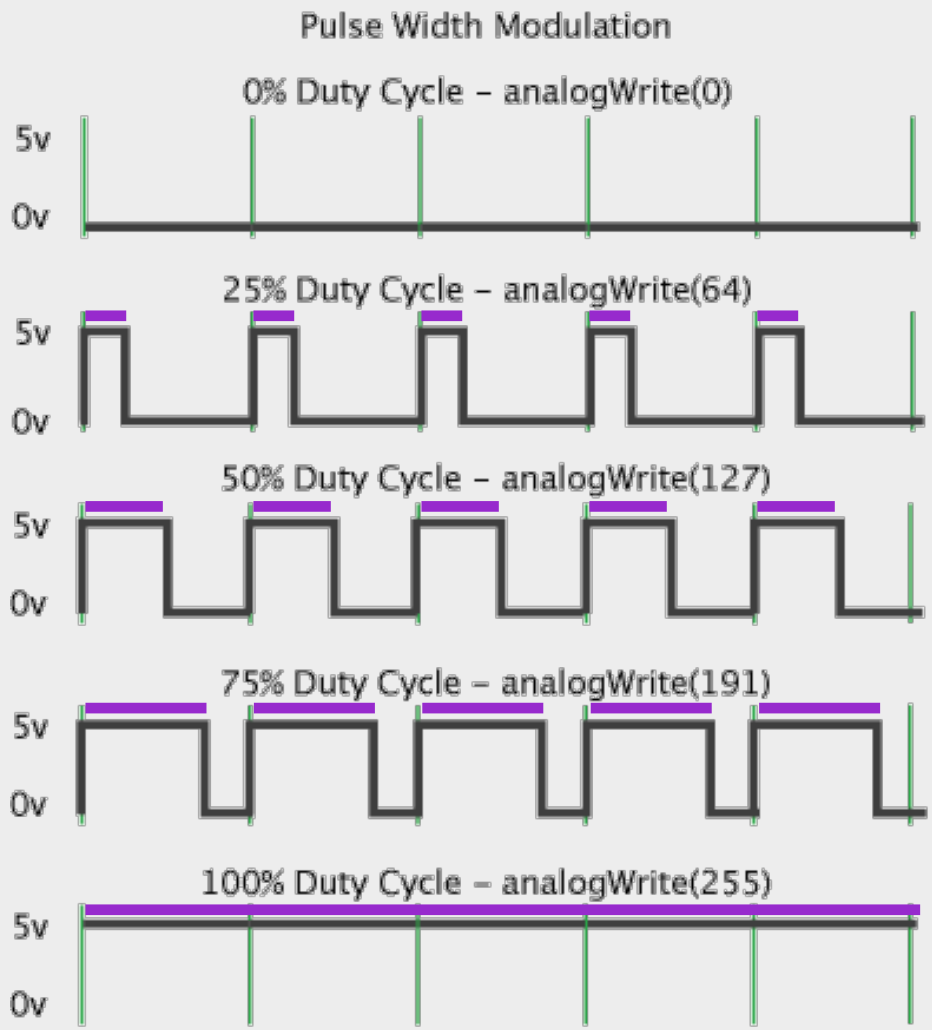
Pulse Width Modulation
0% Duty Cycle – analogWrite(0)
5v
0v
25% Duty Cycle – analogWrite(64)
5v
0v
50% Duty Cycle – analogWrite(127)
5v
0v
75% Duty Cycle – analogWrite(191)
5v
0v
100% Duty Cycle – analogWrite(255)
5v
0v

Pulse Width Modulation

- If you repeat this on-off pattern fast enough with an LED for example, the result is as if the signal is a steady voltage between 0 and 5v controlling the brightness of the LED.

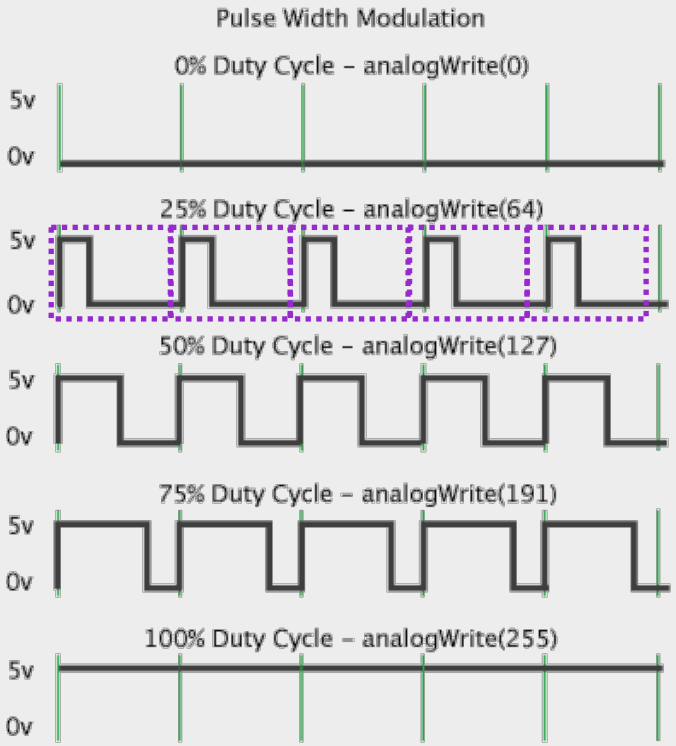

Pulse Width Modulation

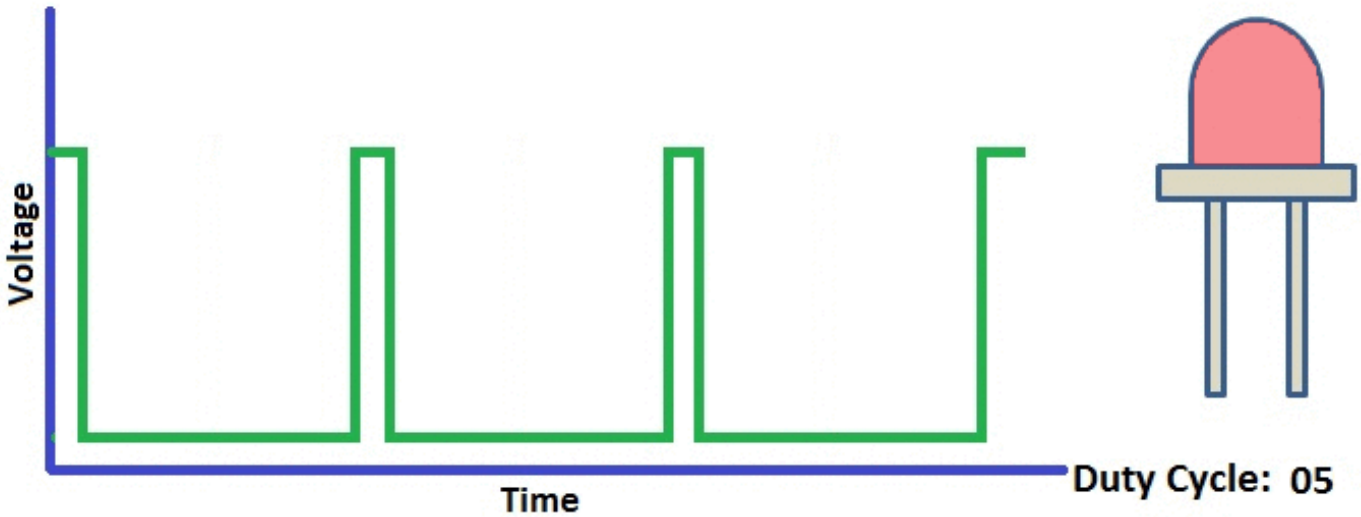

PWM - how it really works

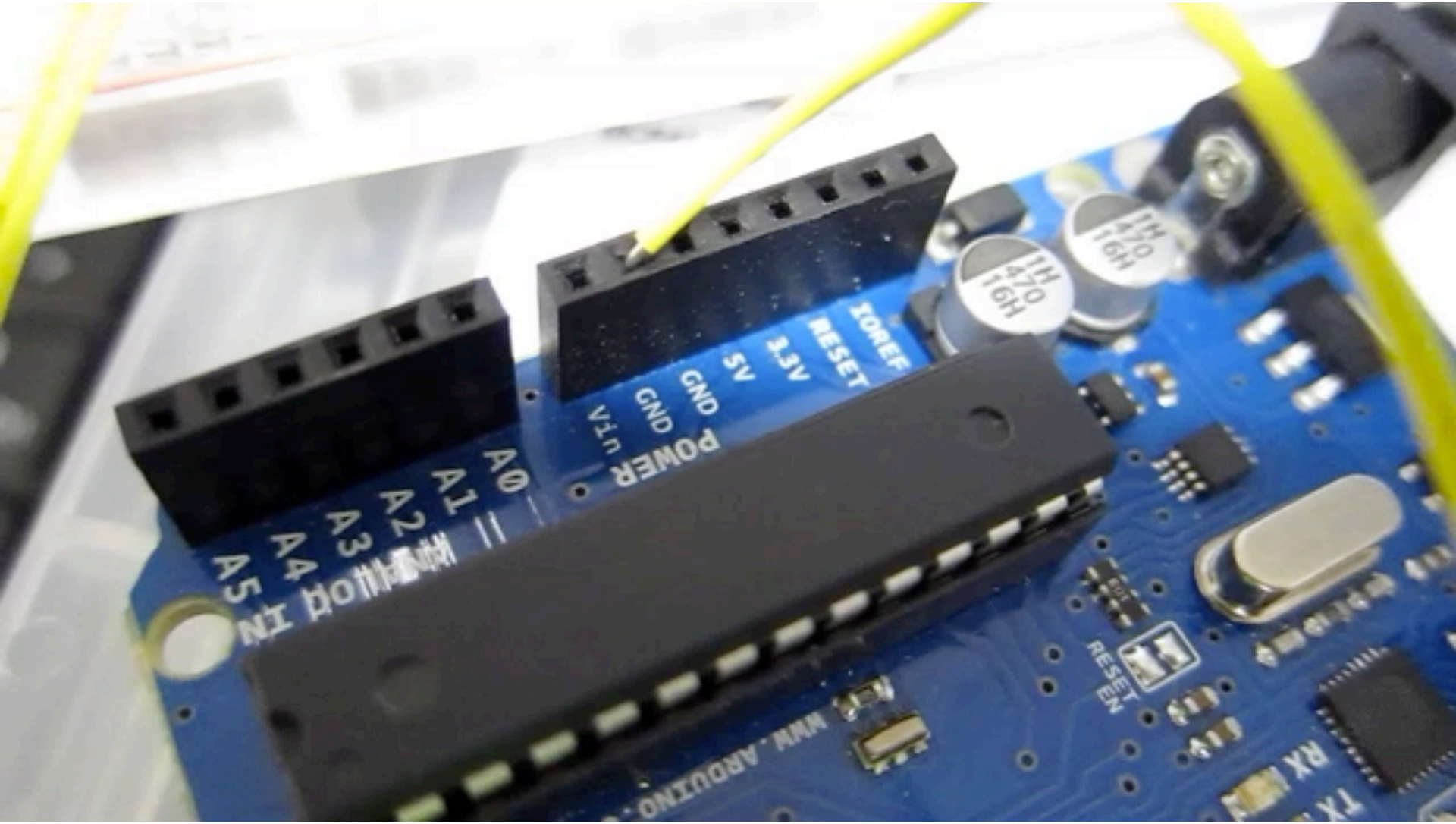

https://educast.fccn.pt/vod/clips/1a4x8vd01p/html5.html

Pulse Width Modulation

- This video shows a LED connected to Arduino digital pin 9, *operating in PWM mode*, showing how the voltage varies accordingly with PWM levels.
- The *oscilloscope*, connected between GND and the LED pin shows the *Arduino output, which is running the Fading example from the Analog example section*, which used the analogWrite function to generate a simulated analog value.

Pulse Width Modulation

- PWM provides a way to control the duty cycle, that is the percentage of time the output signal waveform (500Hz, square) is in HIGH or LOW state. This percentage translates to a proportional fraction of 5V.

Pulse Width Modulation

Now you can dim 3 leds (R,G,B) with different intensities…

…or an single RGB led, to generate 16M different colors !

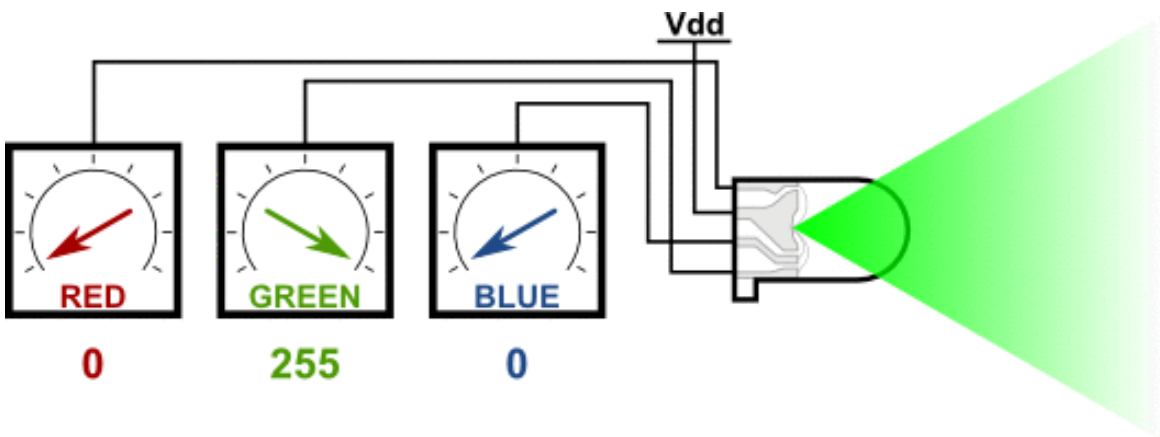

How to use PWM ?

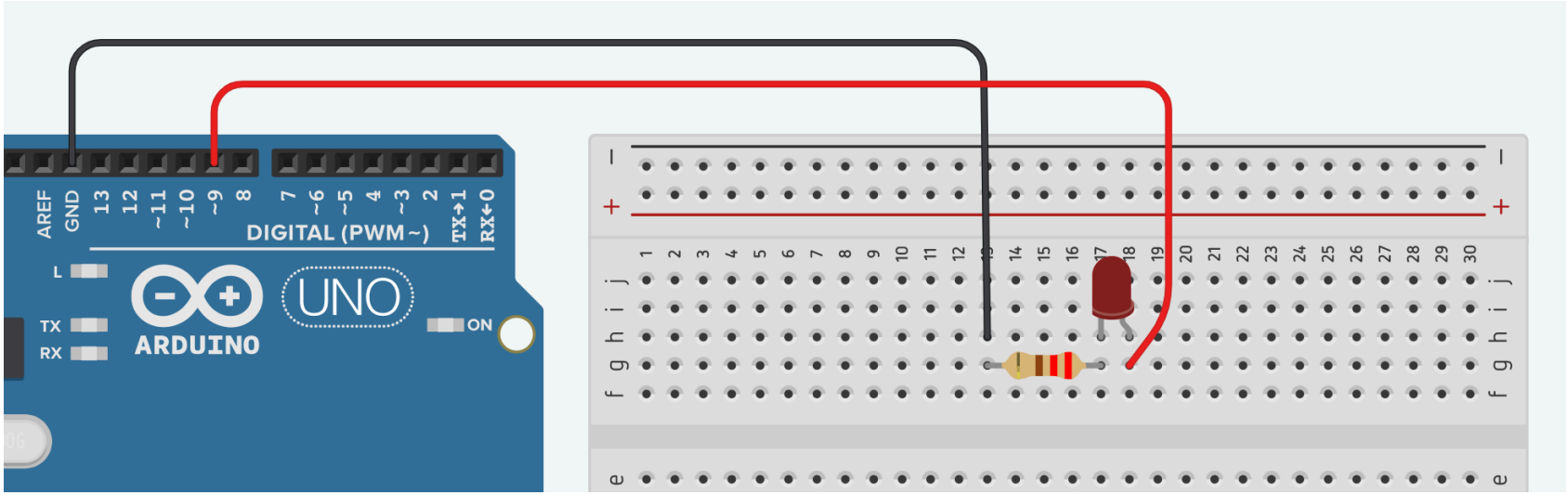

How to use PWM ?

The **analogWrite** function takes care of PWM control.

```
int ledPin = 9;       // LED connected to digital pin 9 (with PWM capabilities)
int i = 0;            // We will use this to count up and down

void setup() {
  pinMode(ledPin, OUTPUT);   // sets the pin as output
}

void loop() {
    for (i=0; i<255; i++){  // loop from 0 to 254 to fade in
       analogWrite(ledPin, i);  // set the led brightness
       delay(10); // wait 10ms because the analogWrite is instantaneous and we
would not see any change
    }
    for (i=255; i>0; i--){  // loop from 255 to 1 to fade out
       analogWrite(ledPin, i);  // set the led brightness
       delay(10); // wait 10ms
    }
}
```

Kit Challenge

1. Assemble a circuit of with one LED and one potentiometer
2. Use the potentiometer to dim the led using PWM

How to use PWM ?

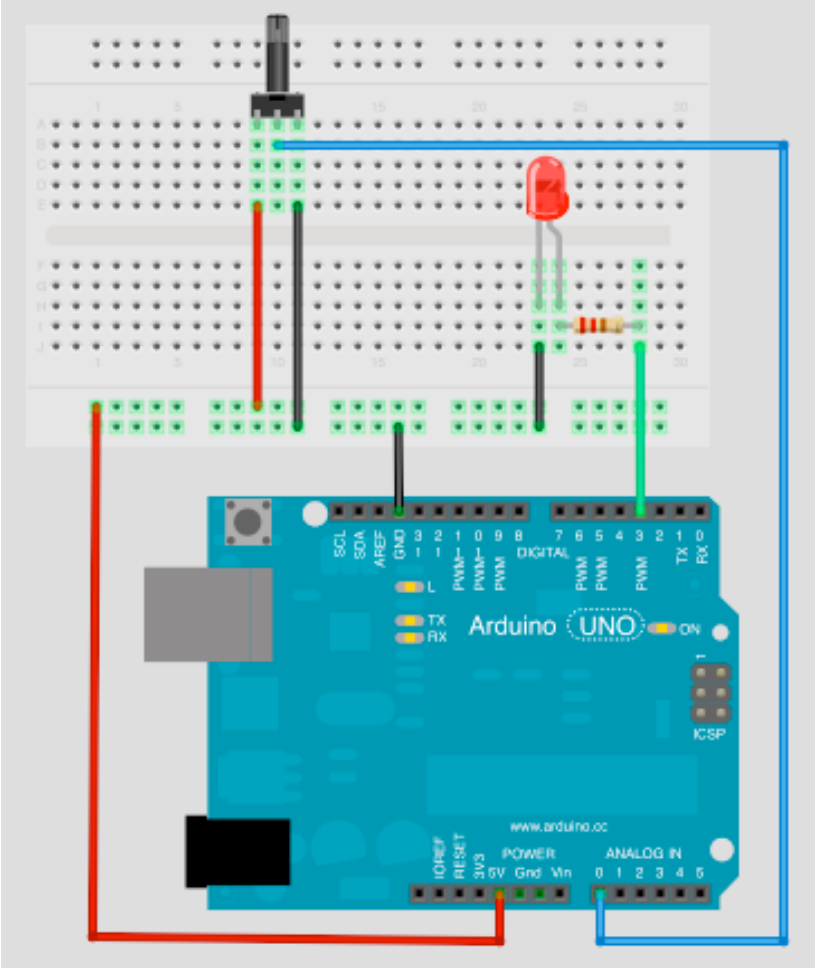

How to use PWM ?

This code snippet demonstrates how we can use a potentiometer to DIM a LED, using PWM.
The **analogWrite** function takes care of PWM control.

```
int ledPin = 3;       // LED connected to digital pin 9 (with PWM capabilities)
int analogPin = 0;    // potentiometer connected to analog pin 3
int val = 0;          // read value from the potentiometer

void setup() {
  pinMode(ledPin, OUTPUT);   // sets the pin as output
}

void loop() {
  val = analogRead(analogPin);   // read the input pin
  analogWrite(ledPin, val / 4);  // analogRead values go from 0 to 1023, analogWrite values from 0 to 255
}
```

Series Circuits

Series Circuits

There's only one way (or one path) for the current to flow in the circuit.

Series Circuits

All the components are in series.

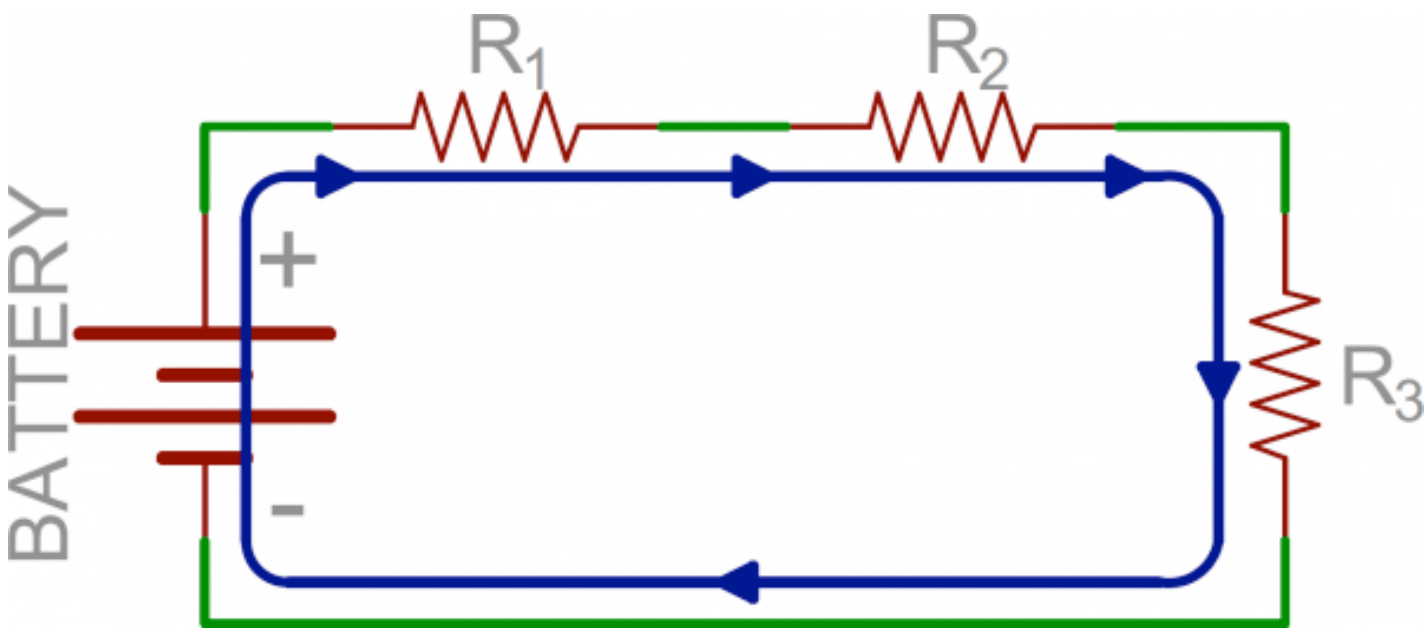

Image source: https://learn.sparkfun.com/tutorials/series-and-parallel-circuits

Series Circuits

$$R_{tot} = R_1$$

Series Circuits

$$R_{tot} = R_1 + R_2$$

Series Circuits

$$R_{tot} = R_1 + R_2 + ... + R_{N-1} + R_N$$

Series Circuits

When we put resistors together like this, in series and parallel, we change the way current flows through them.

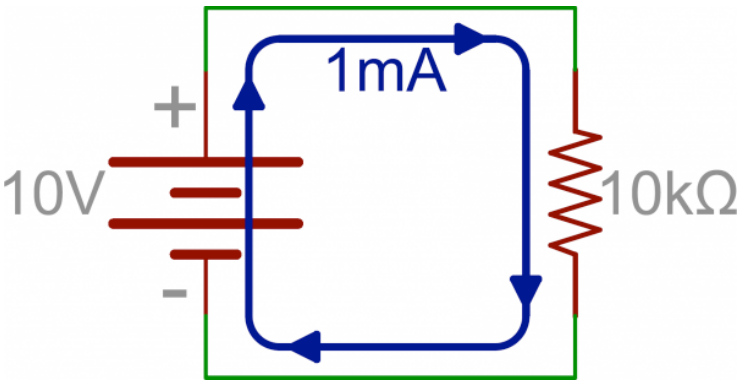

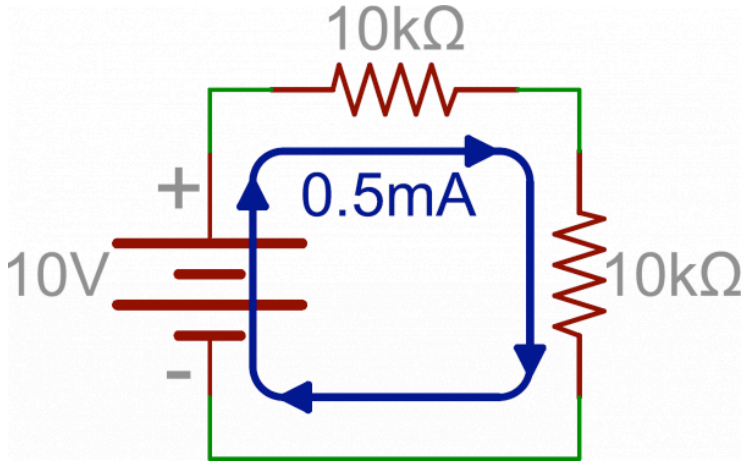

Series Circuits

For example, if we have a **10V supply** across a **10kΩ resistor**, Ohm's law says we got **1mA of current flowing**.

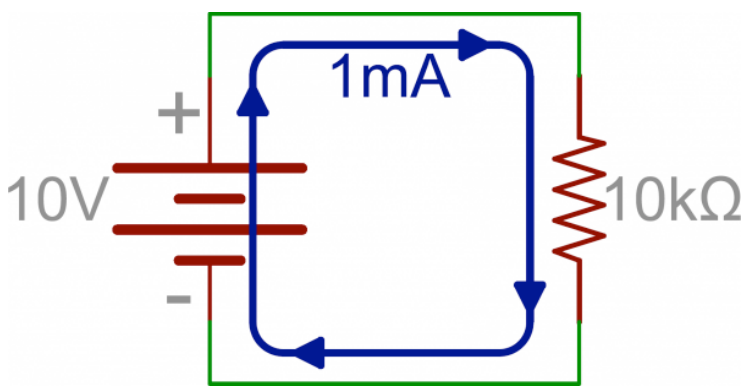

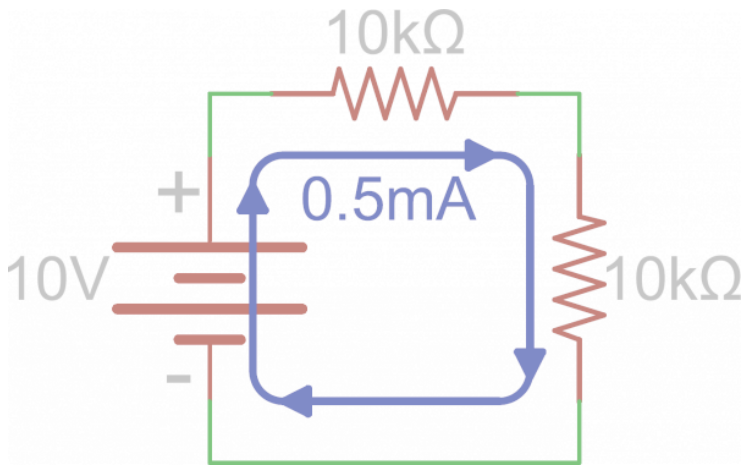

Series Circuits

For example, if we have a **10V supply** across two parallel **10kΩ resistor**, we got **0.5mA of current flowing**.

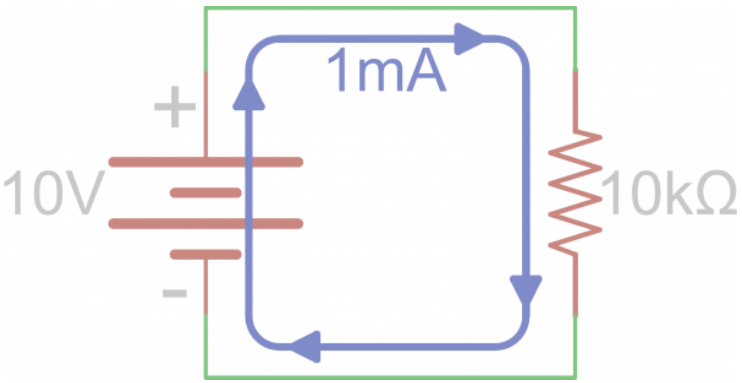

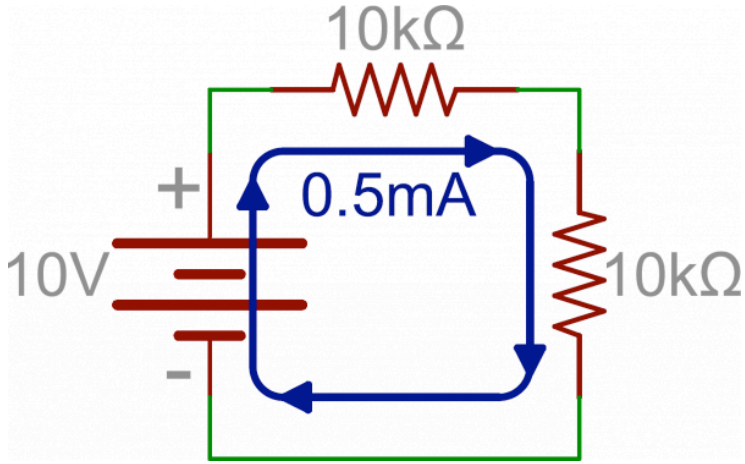

Parallell Circuits

Series Circuits

There is more than one path for the current to flow in the circuit.

Parallel Circuits

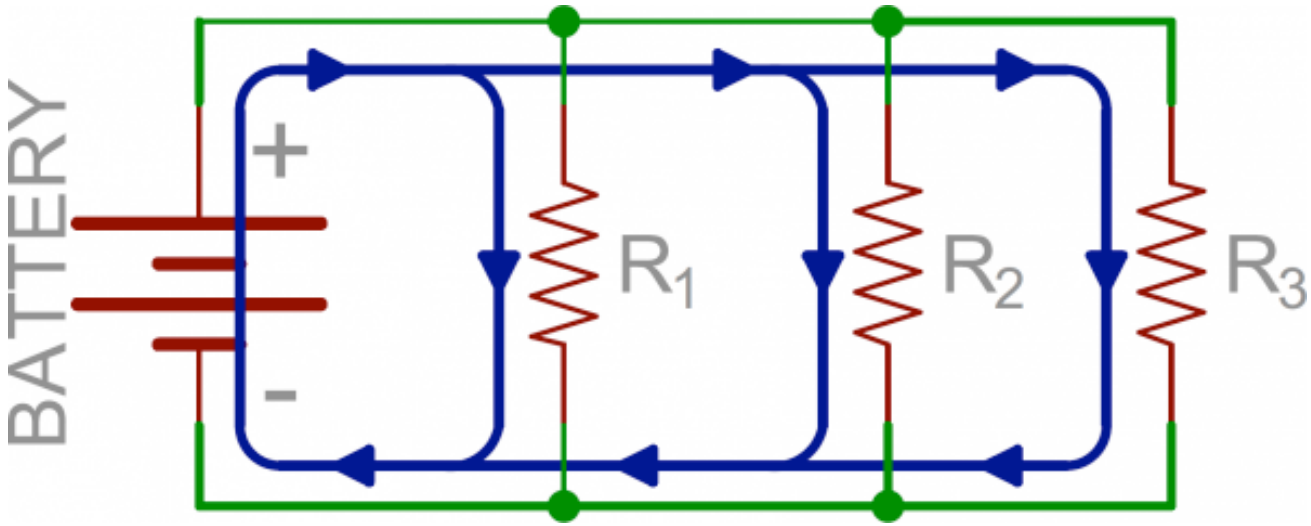

Image source: https://learn.sparkfun.com/tutorials/series-and-parallel-circuits

Parallel Circuits

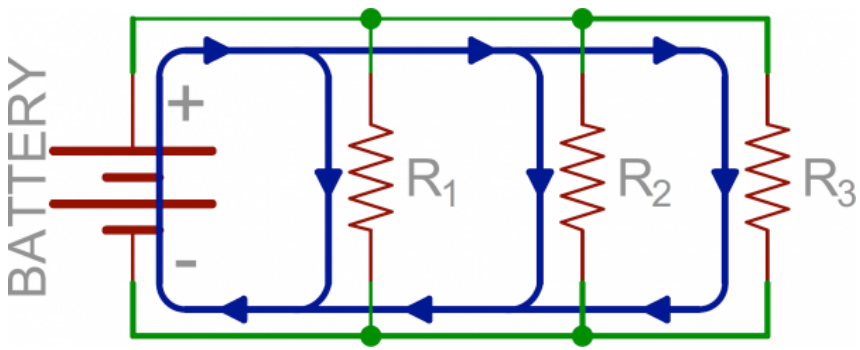

- From the positive battery terminal, current flows to R_1… and R_2, and R_3.
- They share the node that connects the battery to R_1 is also connected to the other resistors.
- The other ends of these resistors are similarly tied together, and then tied back to the negative terminal of the battery.

Parallel Circuits

While series components all have equal currents running through them,
parallel components all have the same voltage drop across them.

Image source: https://learn.sparkfun.com/tutorials/series-and-parallel-circuits

Parallel Circuits

Now there are two paths for current to take.

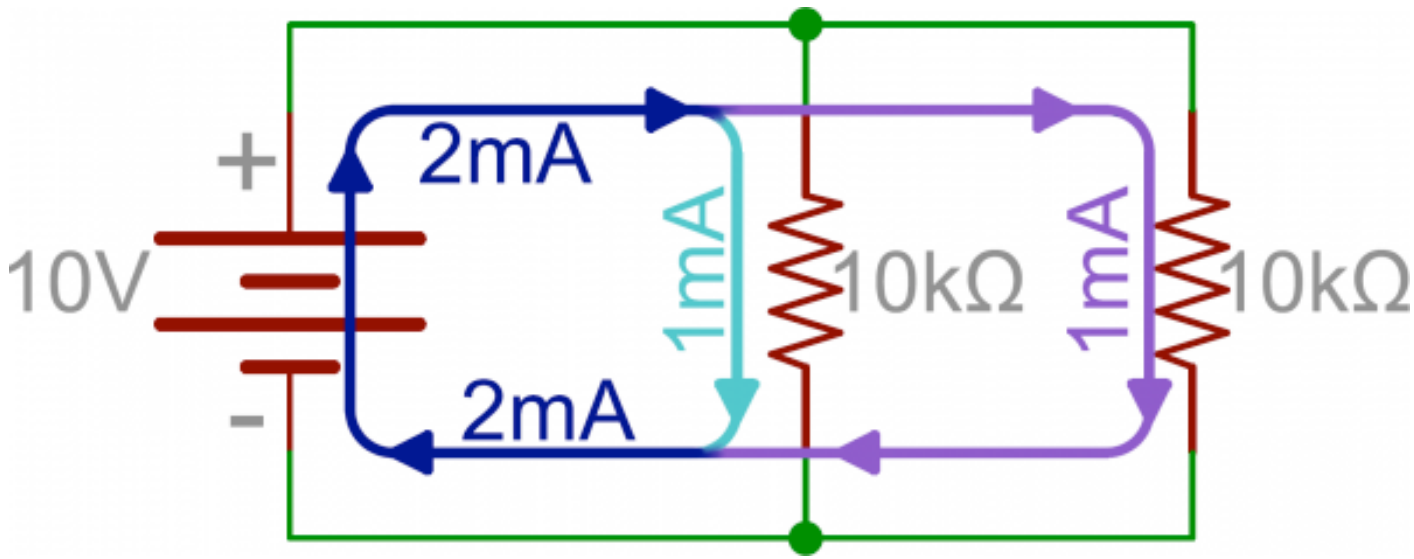

Image source: https://learn.sparkfun.com/tutorials/series-and-parallel-circuits

Parallel Circuits

Since the supply voltage didn't change, Ohm's Law says the first resistor is still going to draw 1mA. But, so is the second resistor, and we now have a total of 2mA coming from the supply.

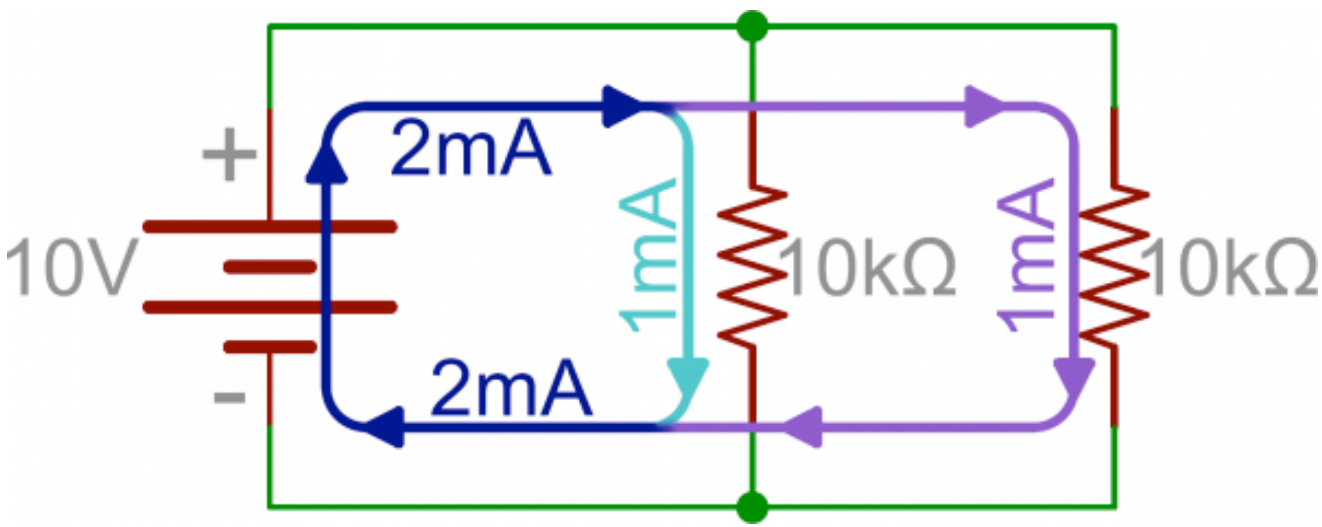

Image source: https://learn.sparkfun.com/tutorials/series-and-parallel-circuits

Parallel Circuits

This implies that we've cut the **total resistance in half** (because the two resistors are equal).

Parallel Circuits

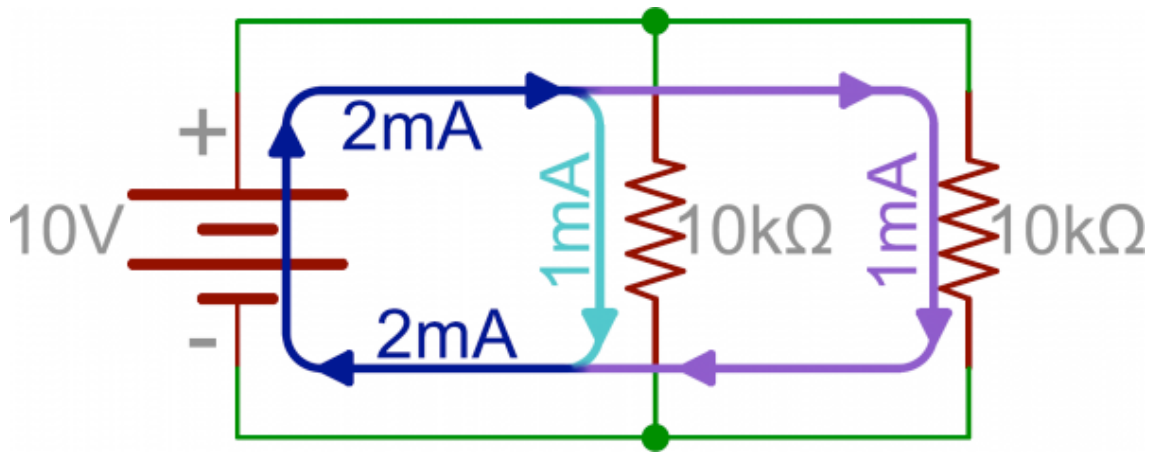

$$\frac{1}{R_{tot}} = \frac{1}{R_1} + \frac{1}{R_2} + \ldots + \frac{1}{R_{N-1}} + \frac{1}{R_N}$$

Mixed Circuits

Mixed Circuits

Here we have a circuit with mixed series and parallel elements.

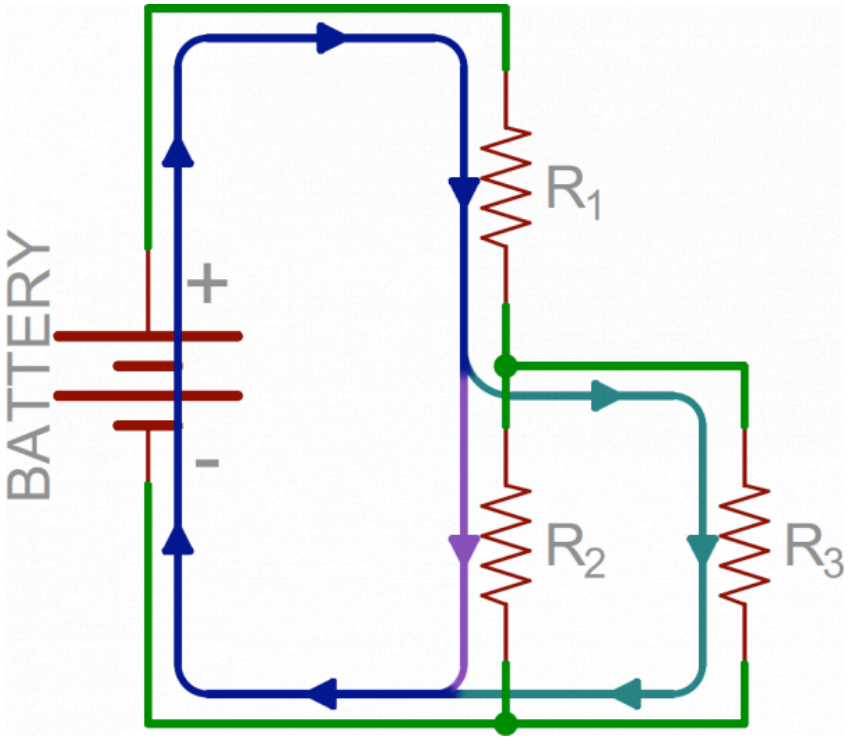

Mixed Circuits

In this example, **R_2** and **R_3** are in **parallel** with each other

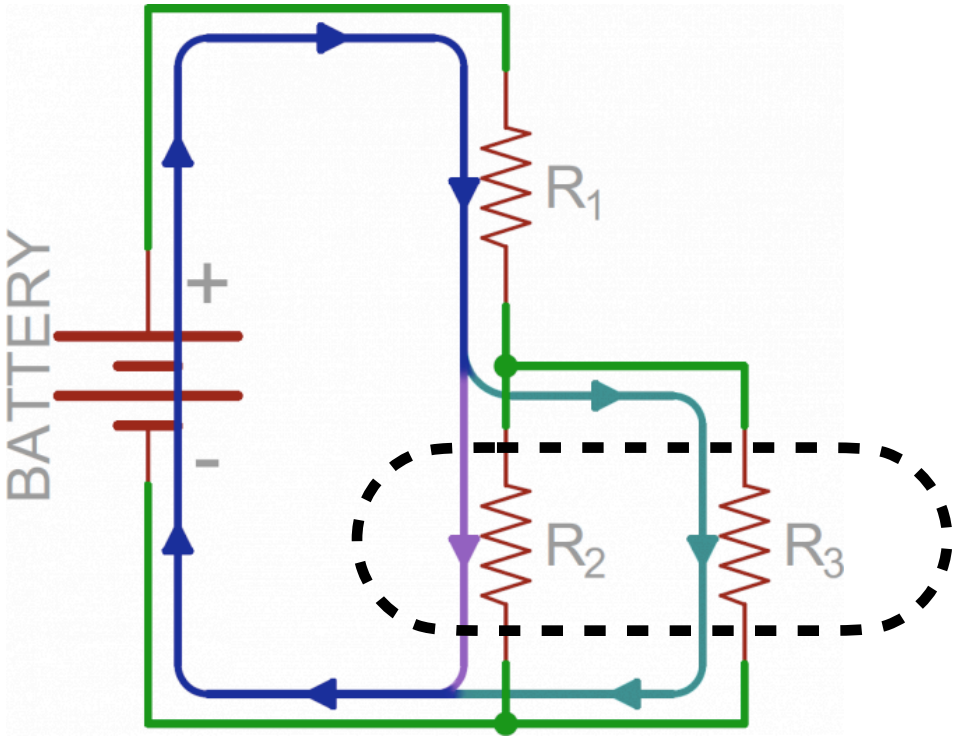

Mixed Circuits

R_1 is in **series** with the parallel combination of R_2 and R_3.

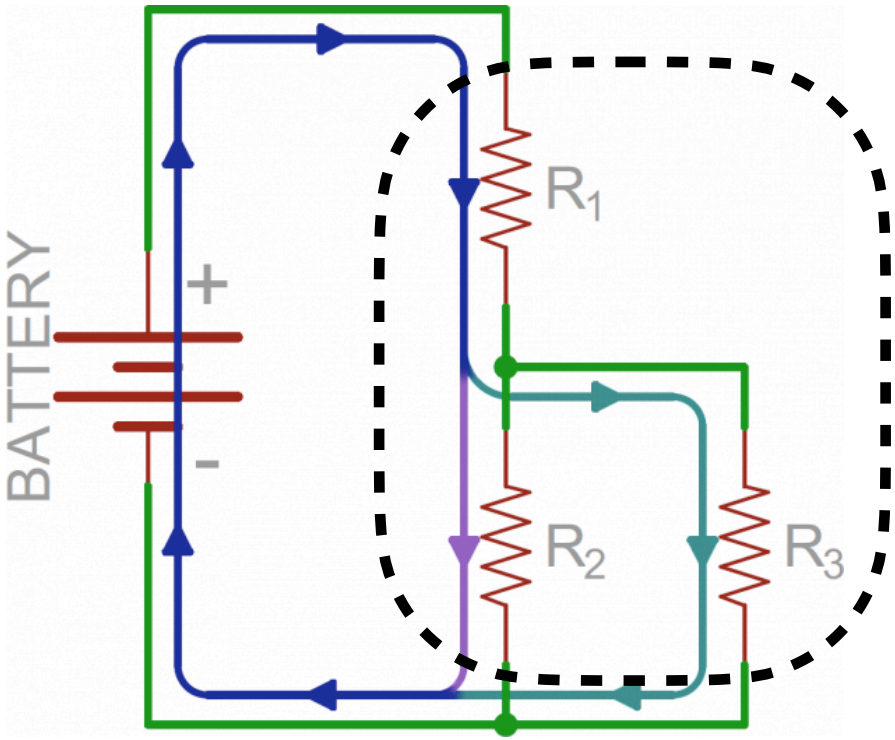

Mixed Circuits

From the positive battery terminal, current first encounters R_1. But, at the other side of R_1 the node splits, and current can go to both R_2 and R_3.

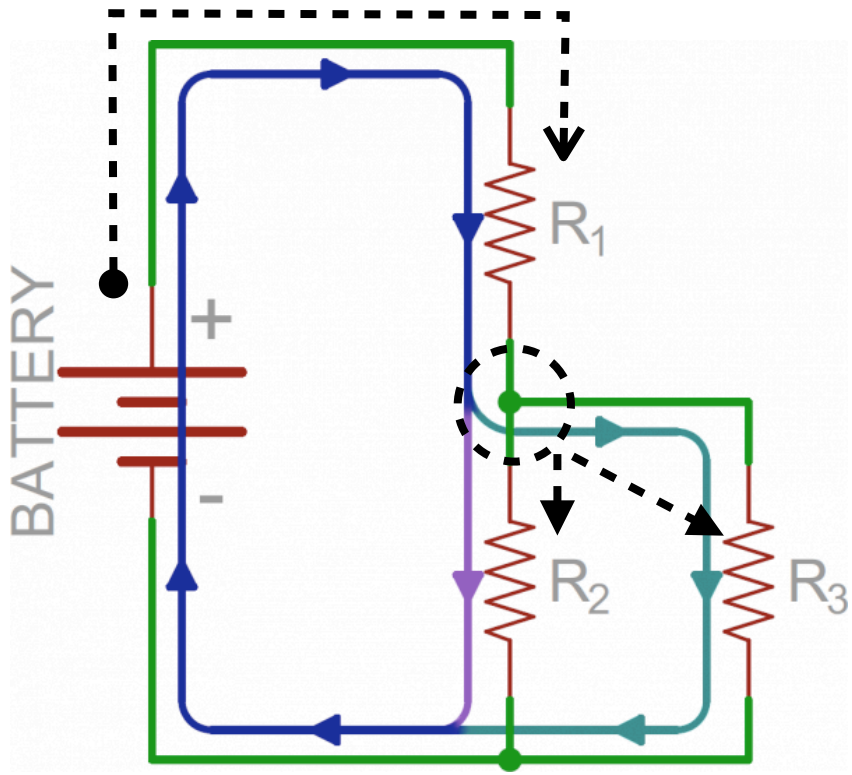

Mixed Circuits

The current paths through R_2 and R_3 are then tied together again, and current goes back to the negative terminal of the battery.

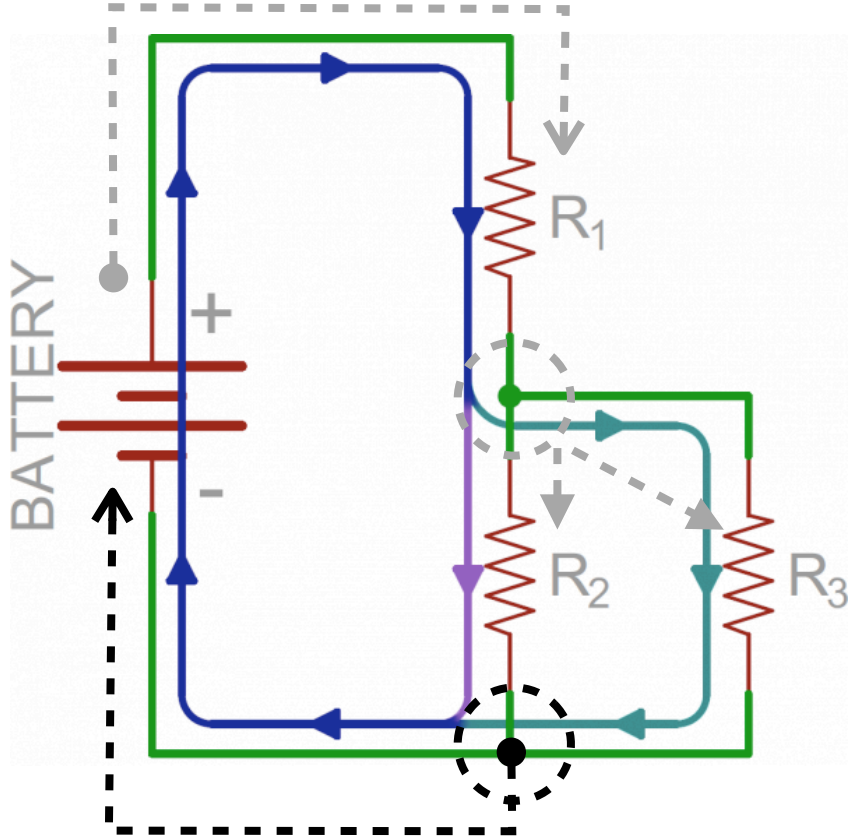

Some experiments

A possible experiment

- Connect 2 LEDs in parallel, using 2 220Ohm resistors (1 for each LED).
- Measure the voltage drop on each component (LED and resistor)
- Measure the current on each branch of the circuit

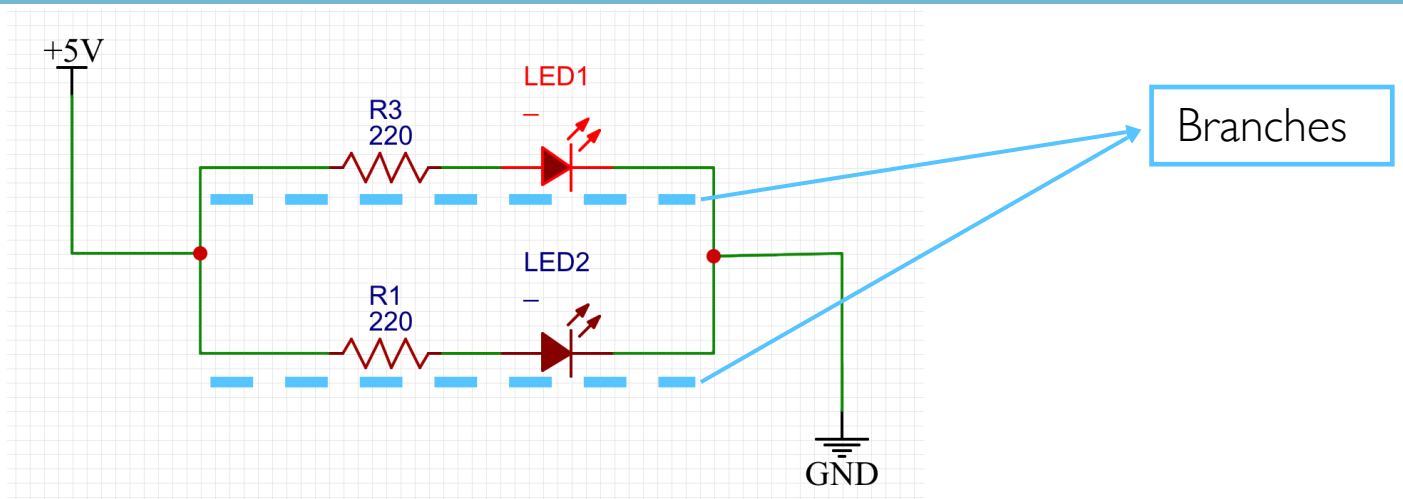

Let's do it !

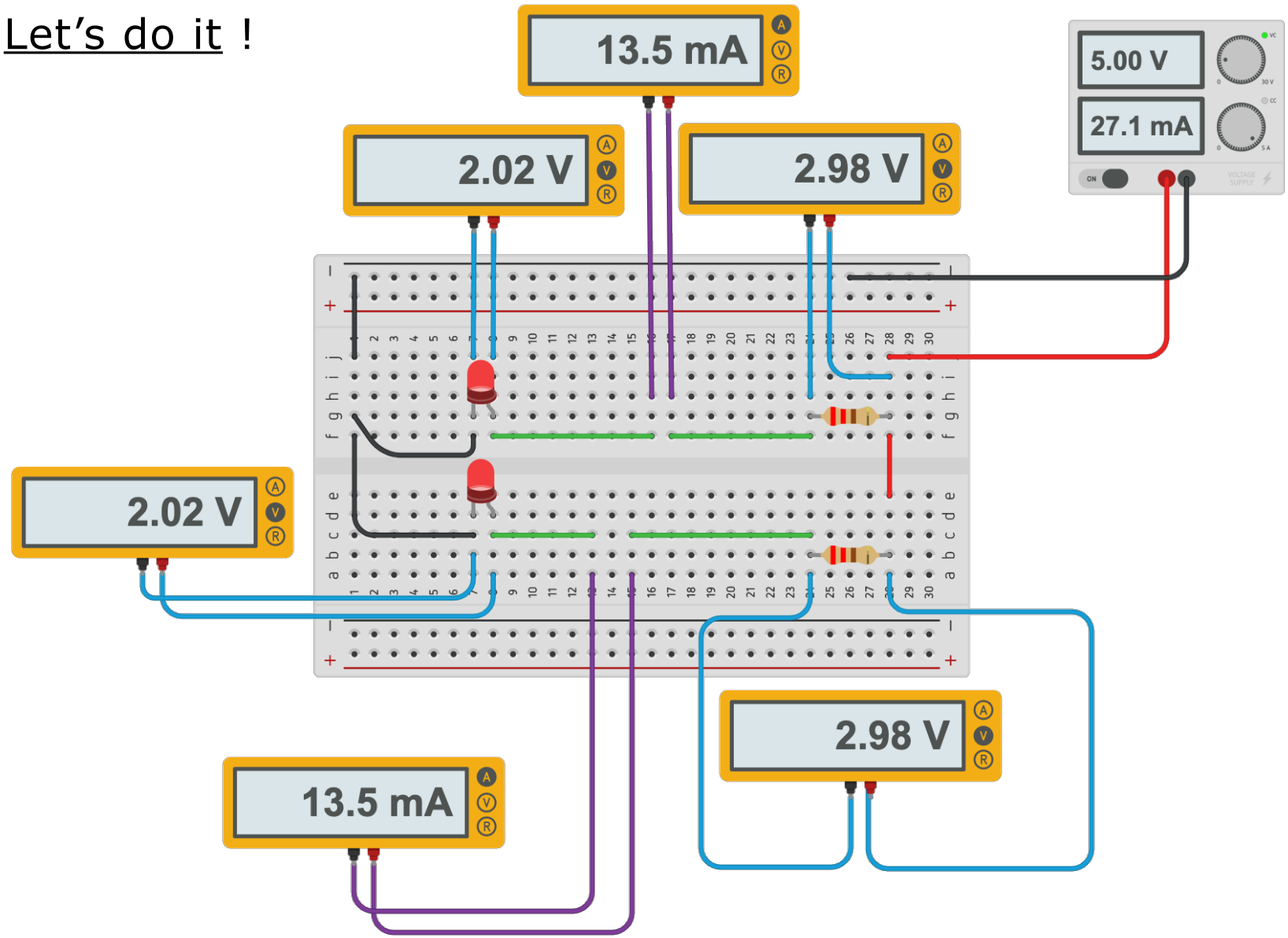

https://www.tinkercad.com/things/7xV18KNJsVp

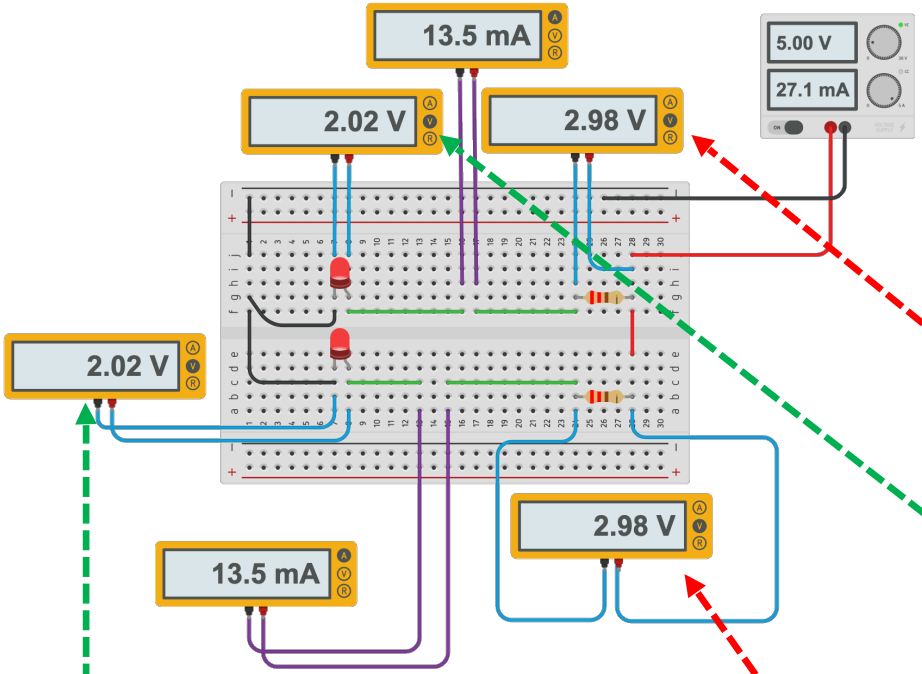

So…

Each branch is consuming **5V**, because they are in parallel.

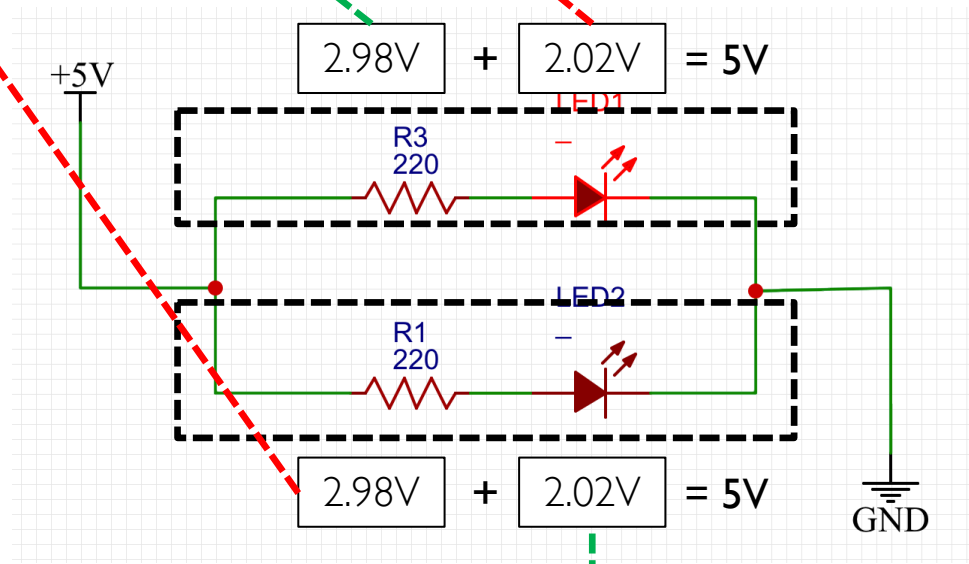

Also…

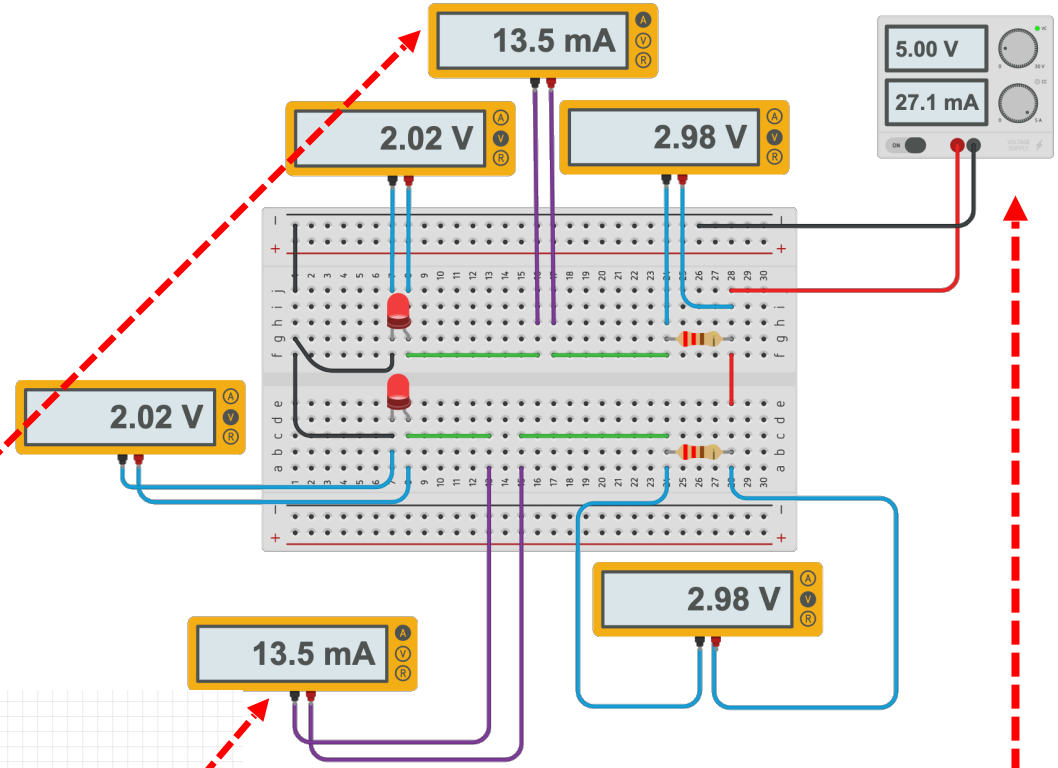

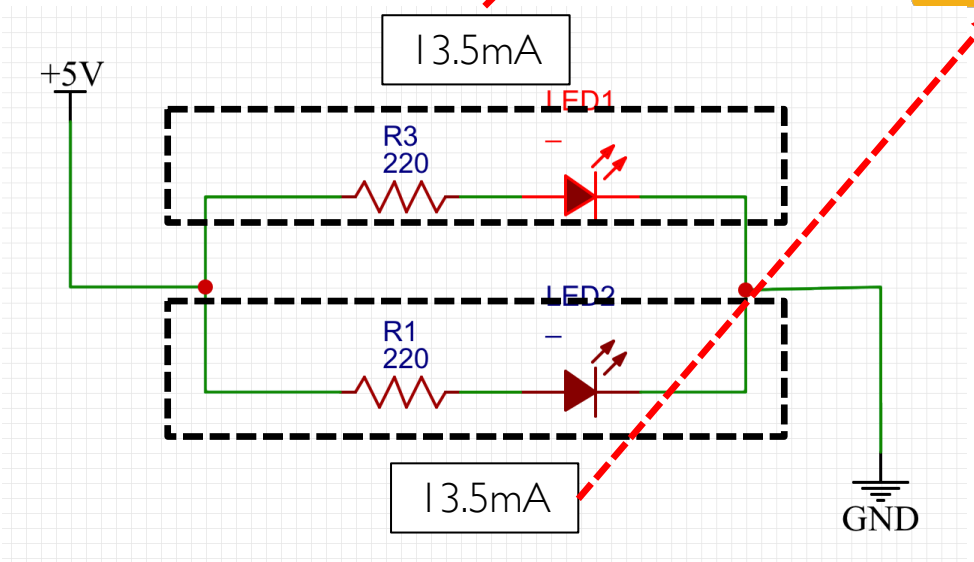

Adding the currents in each branch gives the **total amount of current** consumed by the circuit (**aprox 27.1mA**).

In a nutshell...

The sum of the currents in each branch is equal (or with a negligible error) to the current in the main circuit (similarly to the example that had been shown, reproduced below).

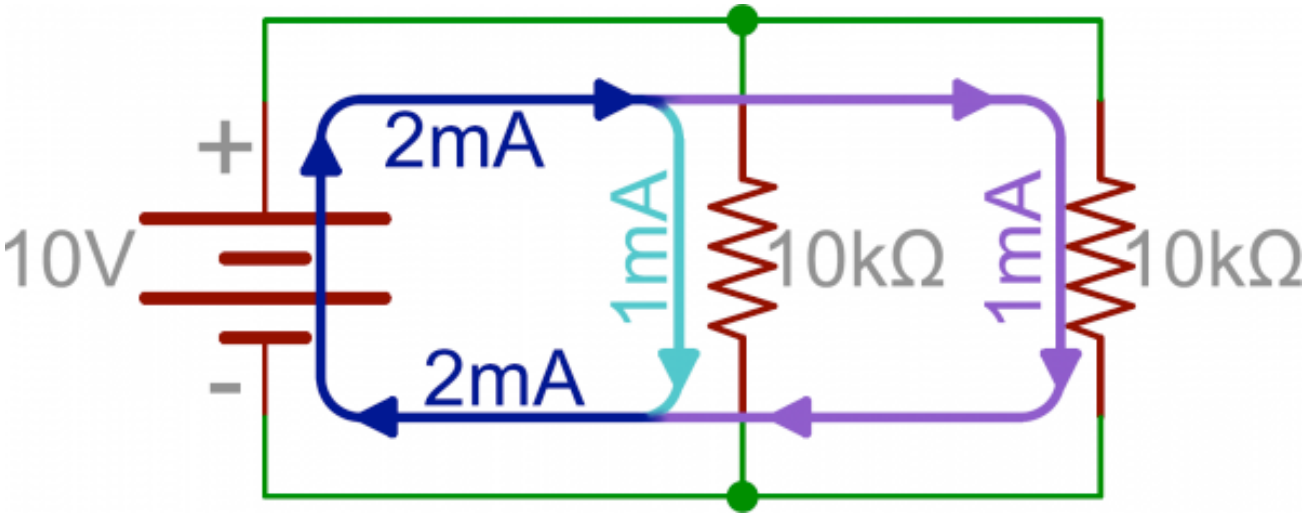

Applying your knowledge

Why not 2 LEDs with the same series resistor ?

- The main reason is because you can't safely connect diodes in parallel.
- When we use one resistor, we have a current limit for the whole diode section. After that it's up to each diode to control the current that goes through it.

Why not 2 LEDs with the same series resistor ?

- The problem is that real world diodes don't have same characteristics.
- The first problem has to do with the current-voltage curve: there's a danger that one diode will start conducting before the others, limiting their current.

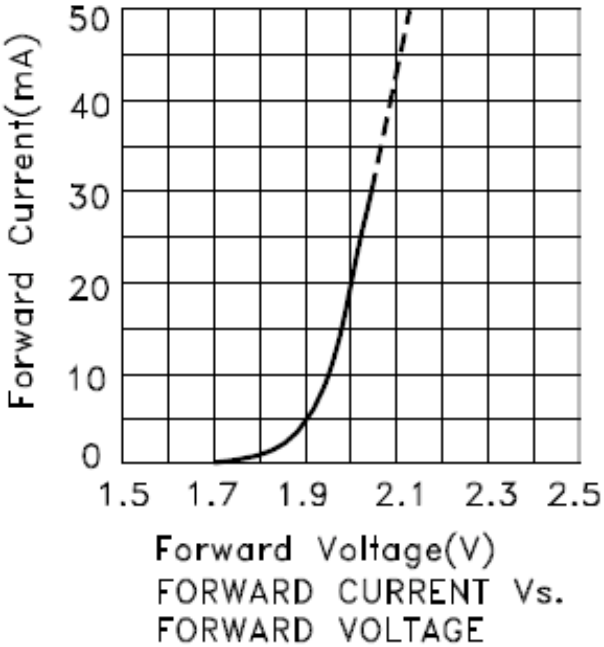

Source: Kingbright KP-2012EC LED data sheet.

Why not 2 LEDs with the same series resistor ?

- The problem is that real world diodes don't have same characteristics.
- The first problem has to do with the current-voltage curve: there's a danger that one diode will start conducting before the others, limiting their current.

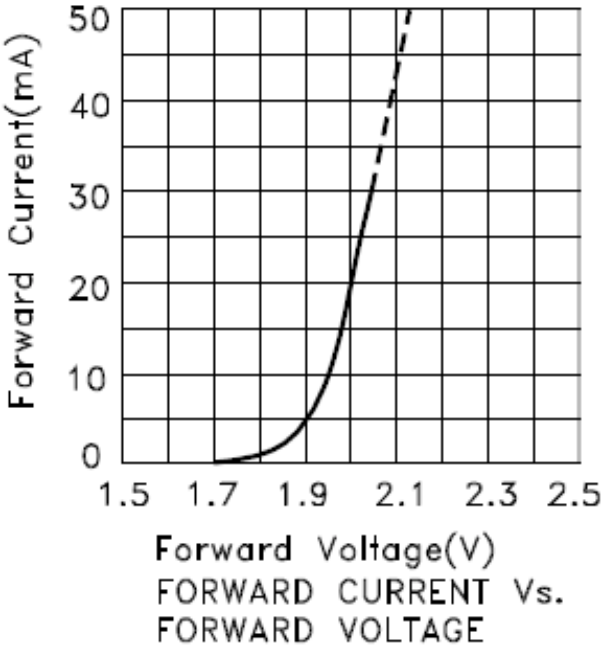

Source: Kingbright KP-2012EC LED data sheet.

Why not 2 LEDs with the same series resistor ?

- For currents higher than 10mA the curve is straight, and the slope is the internal resistance.
- At 20mA (recommended *If* forwarding current, per specs) the forward voltage is 2V, at 10mA this is 1.95V.

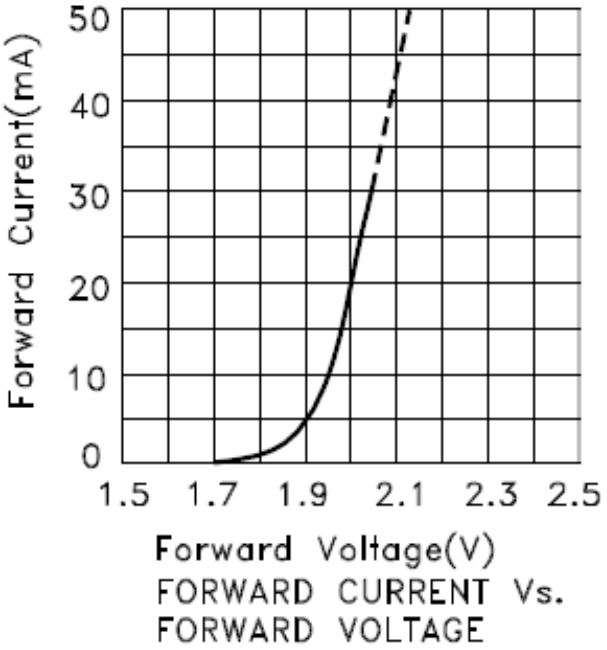

Source: Kingbright KP-2012EC LED data sheet.

Why not 2 LEDs with the same series resistor ?

- Then the internal resistance is:

  `RINT=(V1-V2)/(I1-I2)`

  `RINT=(2V-1.95V)/(20mA-10mA)=5Ω`

- The intrinsic LED (or minimum forward) voltage is 1.9V, so the LED voltage is:

  `1.9V + 5Ω.20mA=2V`

- The theoretical required single series resistor (for a 5V PS and 2 LED) would be:

  `R=(5V-2V)/(2·20mA)=75Ω`

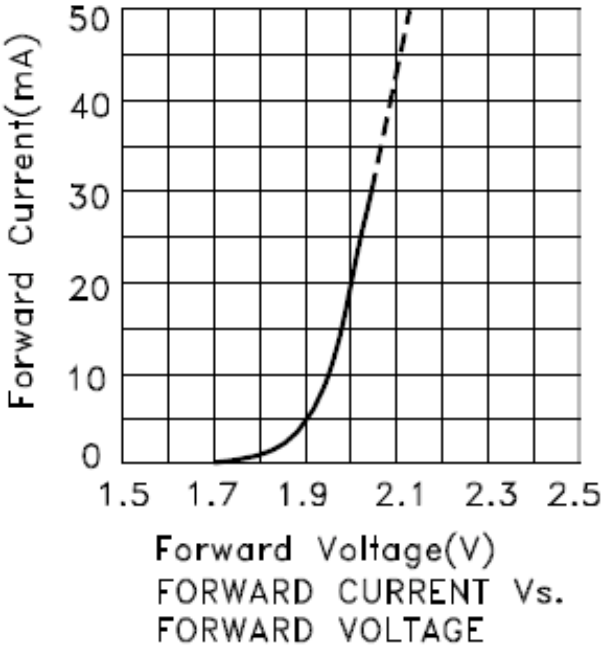

Source: Kingbright KP-2012EC LED data sheet.

<u>Why not 2 LEDs with the same series resistor</u> ?

- But LEDs are not equal. Suppose there is a 1% difference between them (1.9 vs 1.92).

<u>Why not 2 LEDs with the same series resistor</u> ?

Also consider *VL* to be the voltage in the parallel LED section:

1. Current for the resistor: `IR=(5-VL)/75Ω`
2. Current for the first LED: `I1=(VL-1.9)/5Ω`
3. Current for the second LED:
   `I2=(VL-1.92)/5Ω`
4. Now, `IR=I1+I2`, then:
   `(5-VL)/75Ω=(VL-1.9)/5Ω+(VL-1.92)/5Ω`
   `=> VL = 2.01 volt`
5. `I1=21.94mA and I2=17.94mA` !!!

<u>Why not 2 LEDs with the same series resistor</u> ?

Just the smallest discrepancy in LED voltage (~1%) already results in a 18% difference in LED current. So, current will be divided unequally due to spread in LED characteristics.

Those that draw more than their share will get hotter and draw even more.

Those that draw less than their share will get cooler and draw less.

<u>Why not 2 LEDs with the same series resistor</u> ?

In reality the difference may be larger and there may be a visible difference in brightness.
The effect will be worse for lower internal resistances.

Home Challenge

1. Assemble a circuit of with one LDR photoresistor and a LED.
2. Map the environmental light into the brightness of the LED with PWM (darker environment=brighter).