TECNOLOGIAS DE INTERFACE

ANO LETIVO 2022/2023

Aula prática 10

Arduino & Friends:
Capacitors

CAPACITORS

What is a capacitor?

A capacitor is a passive two-terminal electrical component used to store energy electrostatically in an electric field.

25 V
6800
25 V
6800
1000
25 V
10 10
200-J1
K1FA216

What is a capacitor?

The forms of practical capacitors vary widely, but all contain at least two electrical conductors (plates) separated by a dielectric (*i.e.* insulator).

What is a capacitor?

The forms of practical capacitors vary widely, but all contain at least two electrical conductors (plates) separated by a dielectric (*i.e.* insulator).

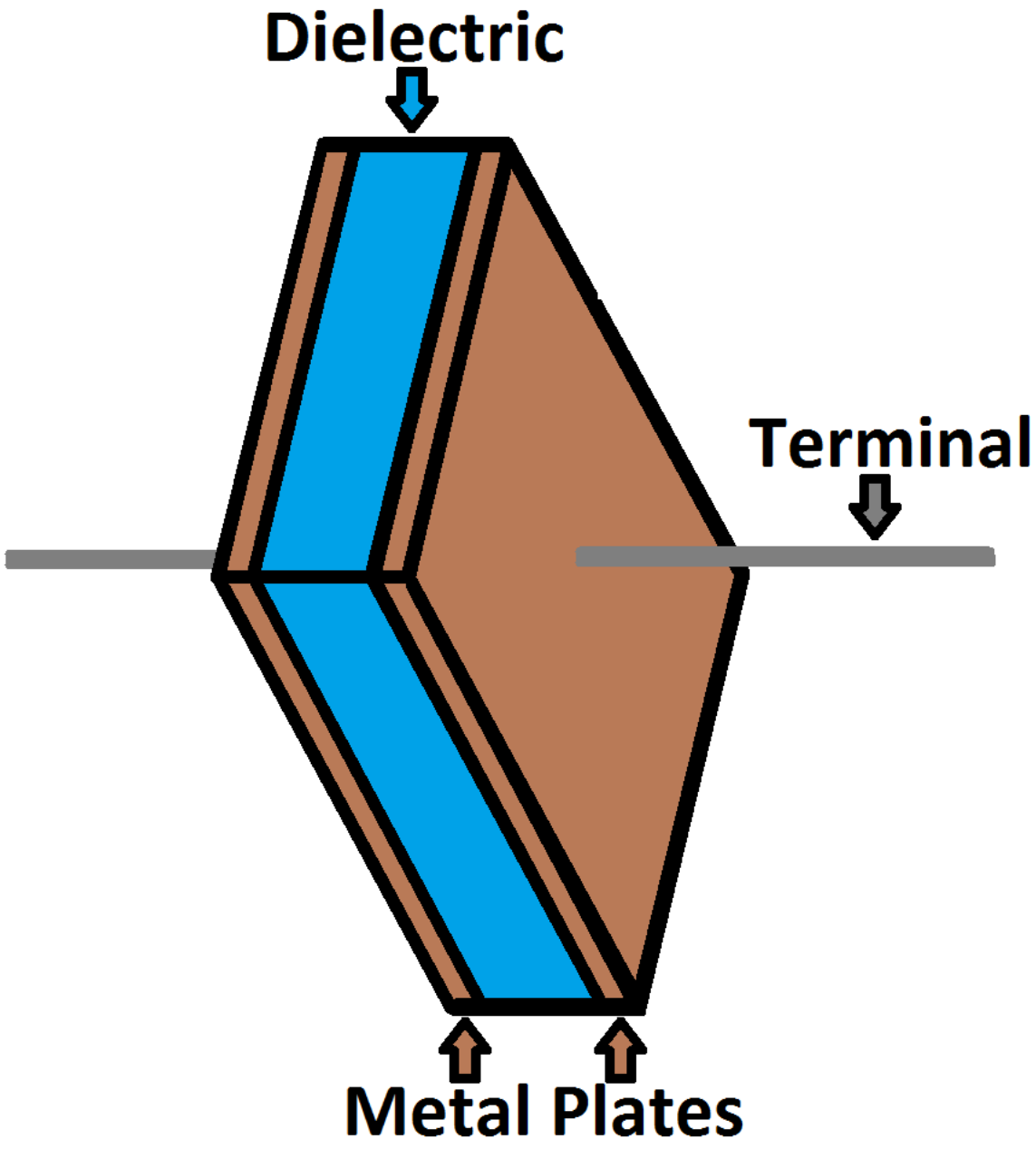
Dielectric
Terminal
Metal Plates

What is a capacitor ?

The **conductors** can be thin films of metal, aluminum foil or disks, etc.

The **'nonconducting'** dielectric acts to increase the capacitor's charge capacity. A dielectric can be glass, ceramic, plastic film, air, paper, mica.

What is a capacitor?

The amount of energy that a capacitor can hold —
its **capacitance**, is a unit of measure called the Farad.

The term farad is named after Michael Faraday, a genius chemist and physicist that discovered the concept of electromagnetic fields.

The most commonly found units of measurement:

- picofarads – pF – 10^-12 – 0.000 000 000 001 F
- nanofarads – nF – 10^-9 – 0.000 000 001 F
- microfarads – uF – 10^-6 – 0.000 001 F

What is a capacitor?

As well as the capacitance value, the other common parameters of a capacitor are:

What is a capacitor?

As well as the capacitance value, the other common parameters of a capacitor are:

→ **the voltage** (never exceed the voltage!)

What is a capacitor?

As well as the capacitance value, the other common parameters of a capacitor are:

→ **the voltage** (never exceed the voltage!)

→ **leakage current** – capacitors leak a very tiny amount of current, usually in the micro-ampere range

What is a capacitor?

As well as the capacitance value, the other common parameters of a capacitor are:

- → **the voltage** (never exceed the voltage!)
- → **leakage current** – capacitors leak a very tiny amount of current, usually in the micro-ampere range
- → **tolerance** – similar to resistors, actual versus manufactured values can vary – sometimes up to 20% either way

What is a capacitor?

As well as the capacitance value, the other common parameters of a capacitor are:

- **the voltage** (never exceed the voltage!)
- **leakage current** – capacitors leak a very tiny amount of current, usually in the micro-ampere range
- **tolerance** – similar to resistors, actual versus manufactured values can vary – sometimes up to 20% either way
- **working temperature** – always check this if your project involves extreme temperatures

Capacitors oppose a change in Voltage

Capacitors oppose a change in Voltage

What this means for circuits:

1. A capacitor will try to keep the voltage constant, when there are changing currents in a circuit (this is what is called a "Bypass Capacitor", because it conducts any changes in voltage to ground).

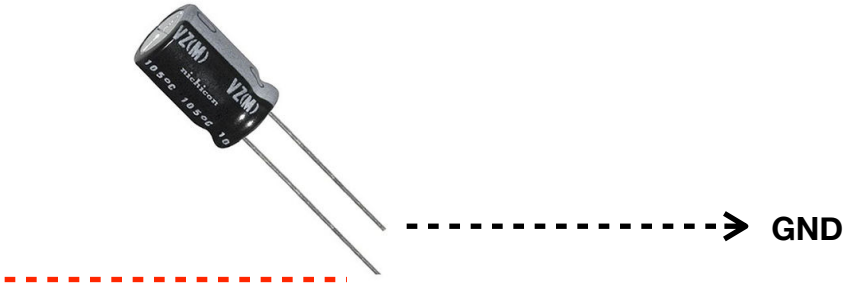

Capacitors oppose a change in Voltage

What this means for circuits:

2. Bypass capacitors DO conduct current when some circuit tries to make the voltage change, such as changing currents drawn by Arduino chips on their circuit board. That's why there are "Bypass Capacitors" on the Arduino boards.

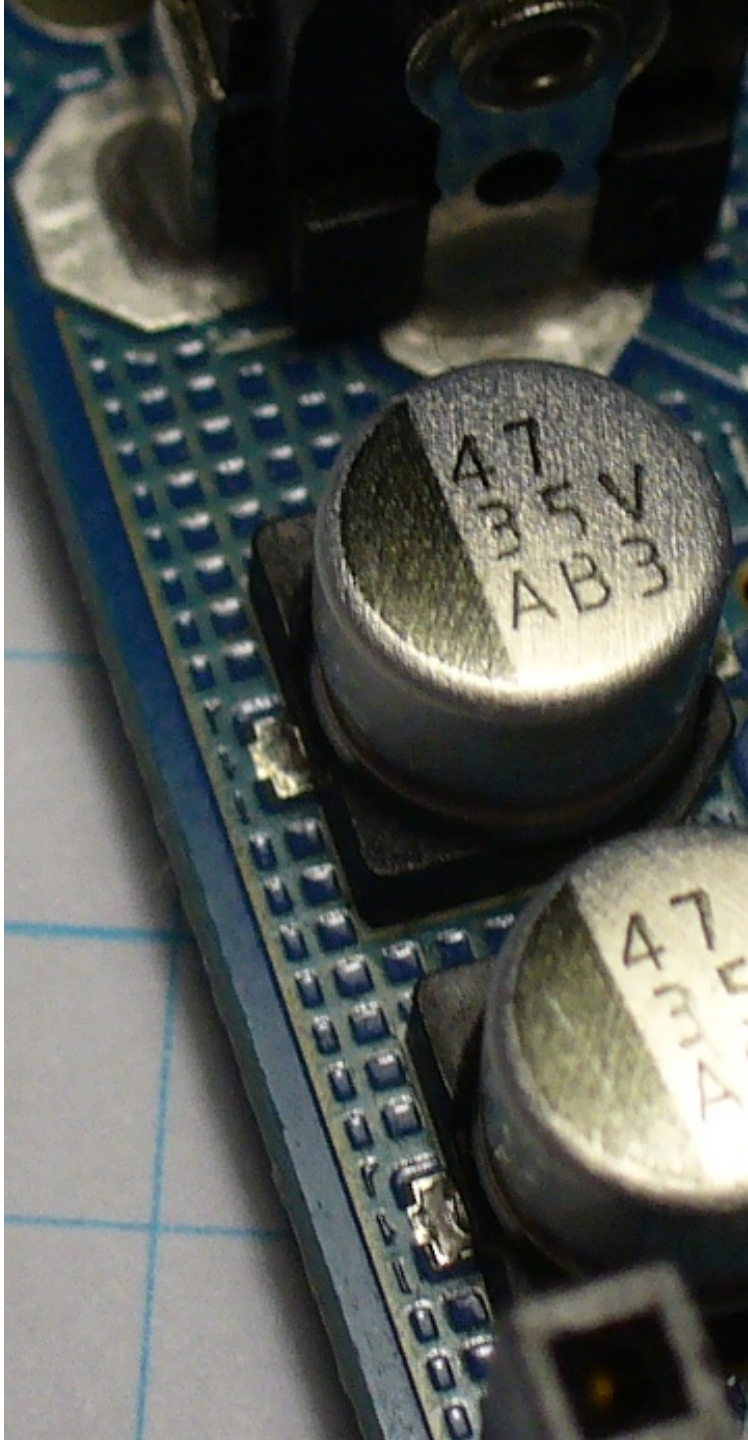

Capacitors oppose a change in Voltage

What this means for circuits:

3. If there is a constant changing AC signal "trying to change the voltage" like in a power supply, a capacitor can act as a "Filter Capacitor", "smoothing" the voltage so that it is more like pure DC.

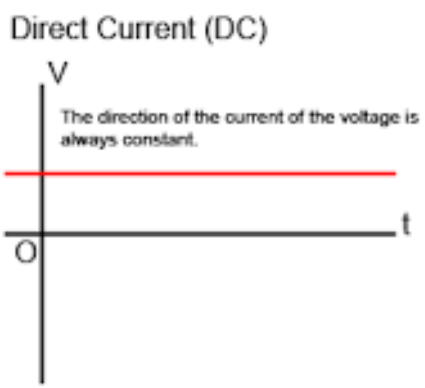

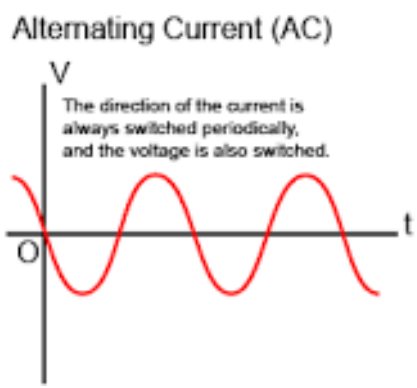

What are they good for?

What might you use Capacitors for with typical Arduino/ Microcomputer circuits?

→ Add "bypass capacitors" to smooth power supplied to external circuits. Locate them close to the circuit.

→ Same thing when putting IC Chips on a breadboard. Connect "Bypass Capacitors" from the Power/Vcc pin of the chip to the chip ground pin, very close to the chip.
A good value is .1uF

→ Timing capacitor for a 555 timer to set its frequency, along with a resistor. Maybe setting 38KHz to drive IR LEDs.

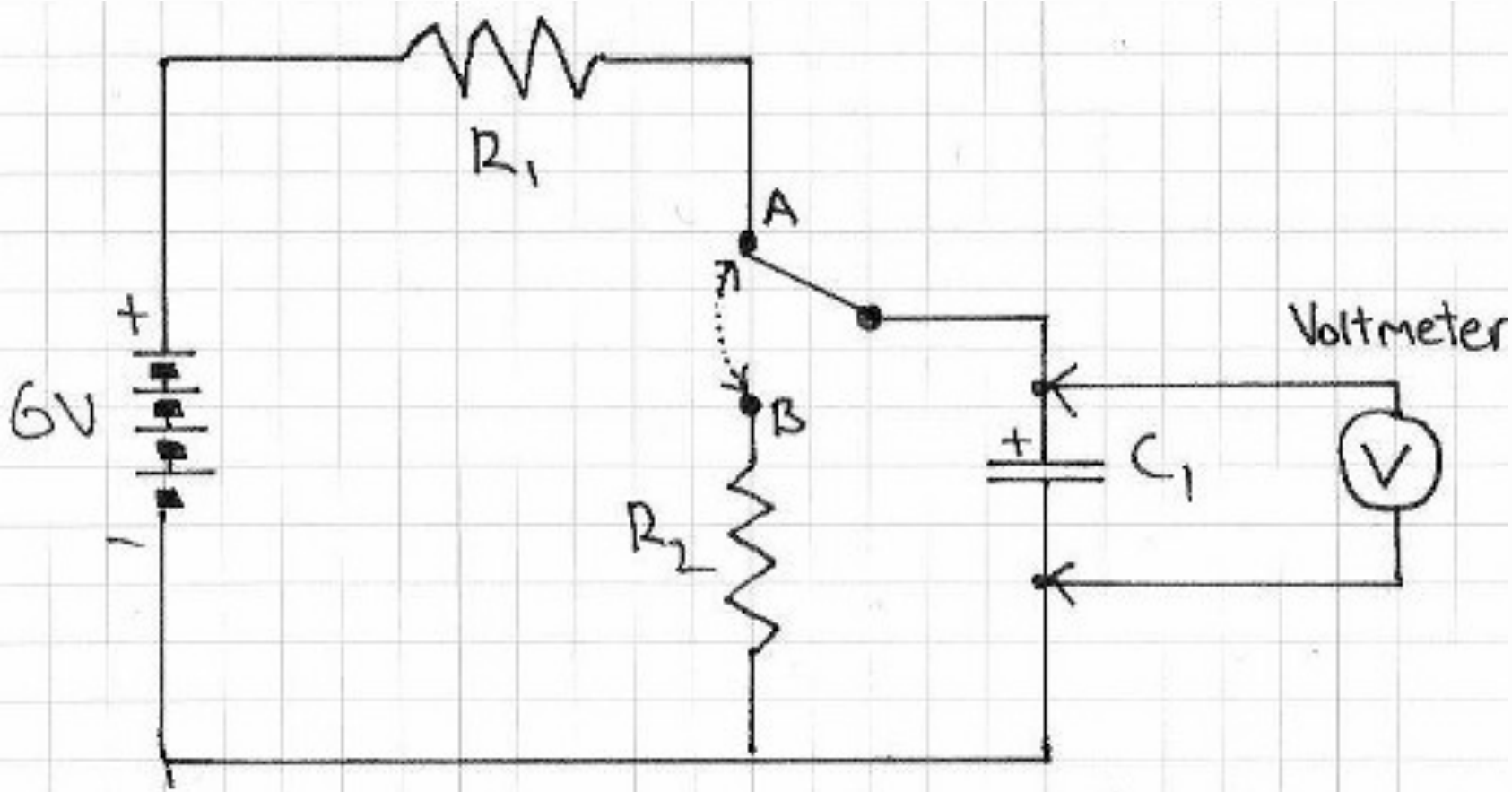
R1
A
B
+
6V
-
R2
+
C1
Voltmeter
V

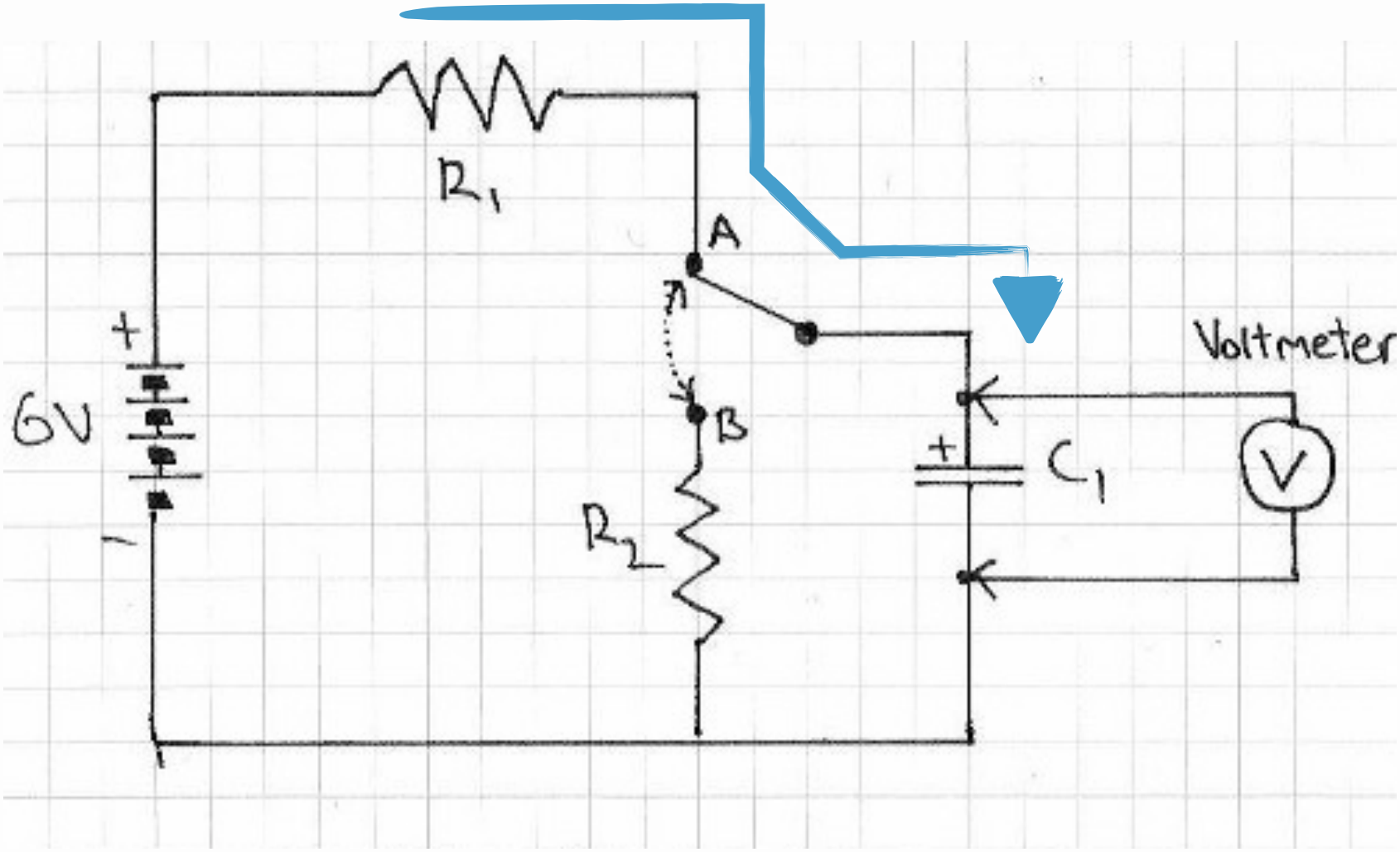
R1
A
B
6V
+
-
R2
+
C1
Voltmeter
V

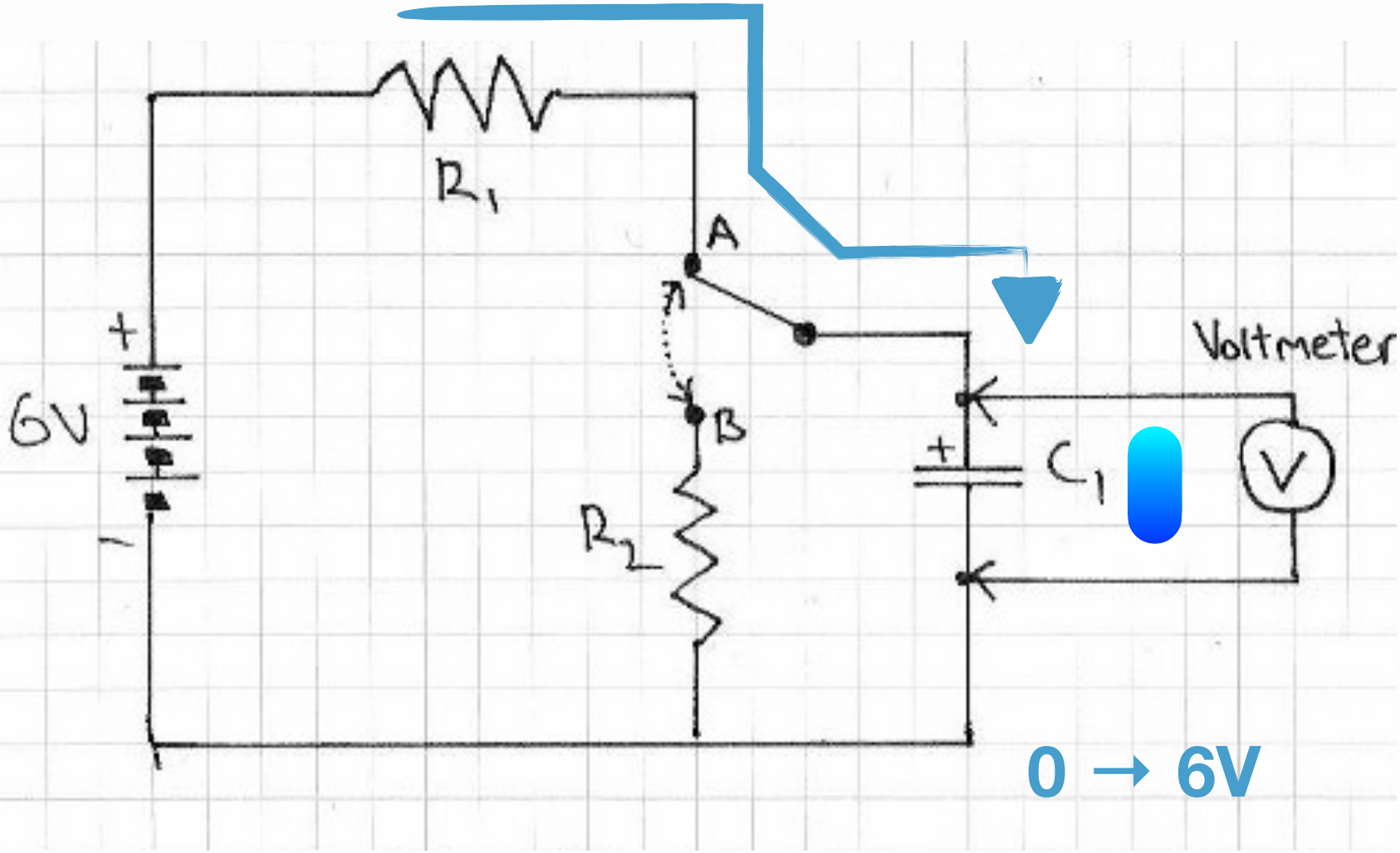
R1
A
B
6V
+
-
R2
+
C1
Voltmeter
V
0 → 6V

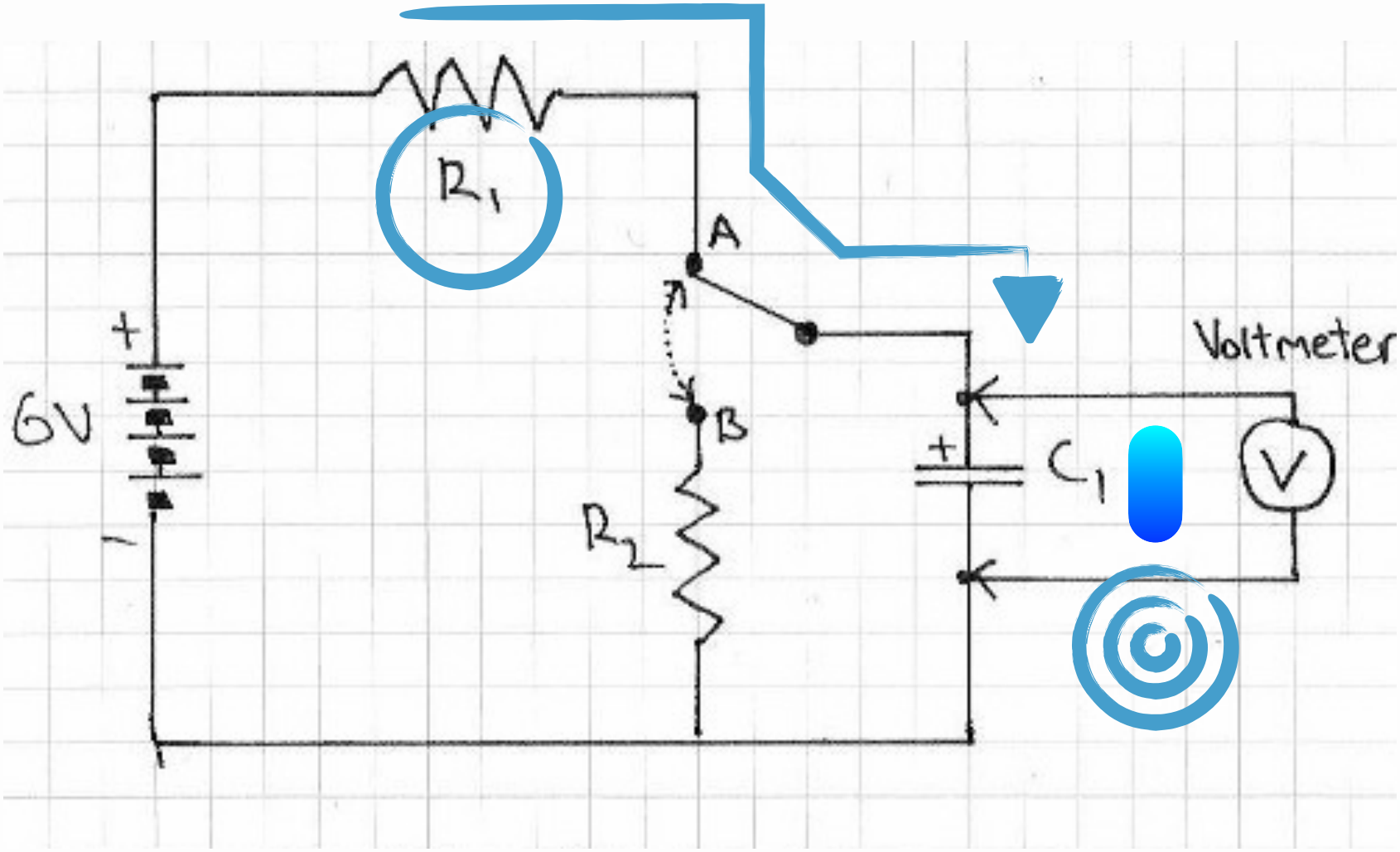
R1
A
B
6V
+
-
R2
+
C1
Voltmeter
V

What are they good for?

$$\zeta = R \, x \, C$$

The time constant is the time taken (in seconds) by the capacitor C that is fed from a resistor R to charge to a certain level.

The capacitor will charge to 63% of the final voltage in one time constant, 85% in two time constants, and 100% in five time constants.

If you graphed the % charge against time constant, the result is **exponential**. That is…

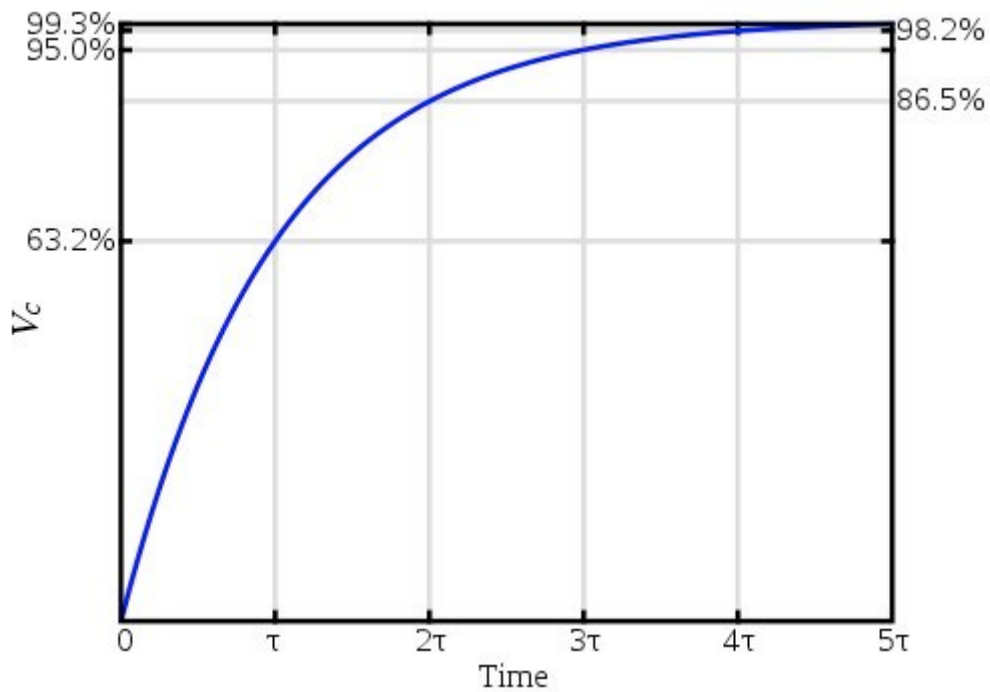

Voltage on a certain instant (t) is:

$$v(t) = V(1 - e^{\frac{-t}{RC}})$$

Exercise #7

Assemble this circuit, with a 47uf, 16V capacitor + a 10KOhm resistor (check polarity!).

Try the code from the “discharge” sketch

What do you can observe ? Besides the output of the “Serial Monitor”, also try the “Serial Graph” button.

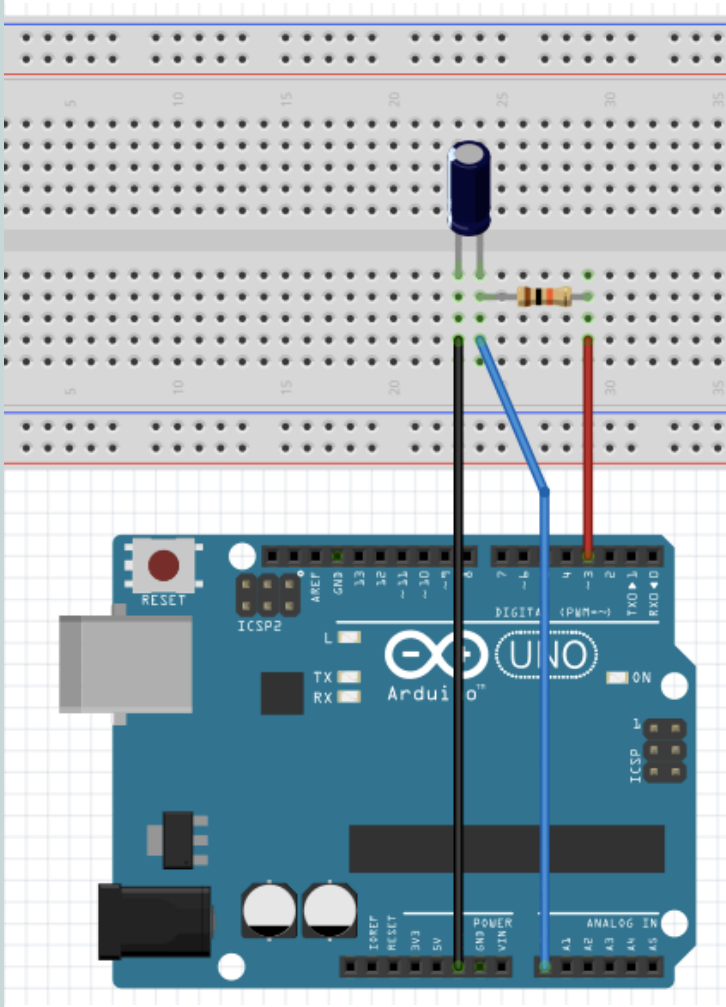

discard | Arduino IDE 2.0.4

Arduino Uno

discard.ino

```
#define analogPin 0
// capacitor charging pin
#define chargePin 3

unsigned long startTime;
unsigned int readVolt;

void  setup () {
  pinMode (chargePin, OUTPUT );
  digitalWrite (chargePin, LOW );
  Serial.begin (9600);              // initialize serial communication
  startTime = micros ();
}

void loop(){
  /* Discharge capacitor */
  // load set pin as output - low impedance
  pinMode (chargePin, OUTPUT );
  digitalWrite (chargePin, LOW );

  readVolt = analogRead (analogPin);   // read the value
  // wait until the capacitor is discharged
  while (readVolt> 0) {
    // print the analog value
    Serial.println ((readVolt*(5/1024.0)));
    readVolt = analogRead (analogPin);   // read voltage;
   }

  digitalWrite (chargePin, HIGH );   // charge the capacitor
  readVolt = analogRead (analogPin);   // read sensor
  while (readVolt <1017) {    // 1016 is the expected value at 5 TC
    Serial.println ((readVolt*(5/1024.0)));
    readVolt = analogRead (analogPin);   // read voltage
  }
}
```

Output

```
Sketch uses 3764 bytes (11%) of program storage space. Maximum is 32256 bytes.
Global variables use 202 bytes (9%) of dynamic memory, leaving 1846 bytes for local variables. Maximum is 2048 bytes.
```

Toggle Bottom Panel

Ln 14, Col 1 Arduino Uno [not connected] 2

Code: https://github.com/sergiomrebelo/fctuc-mdm-ti/tree/main/PL9%E2%80%93Capacitors/discard

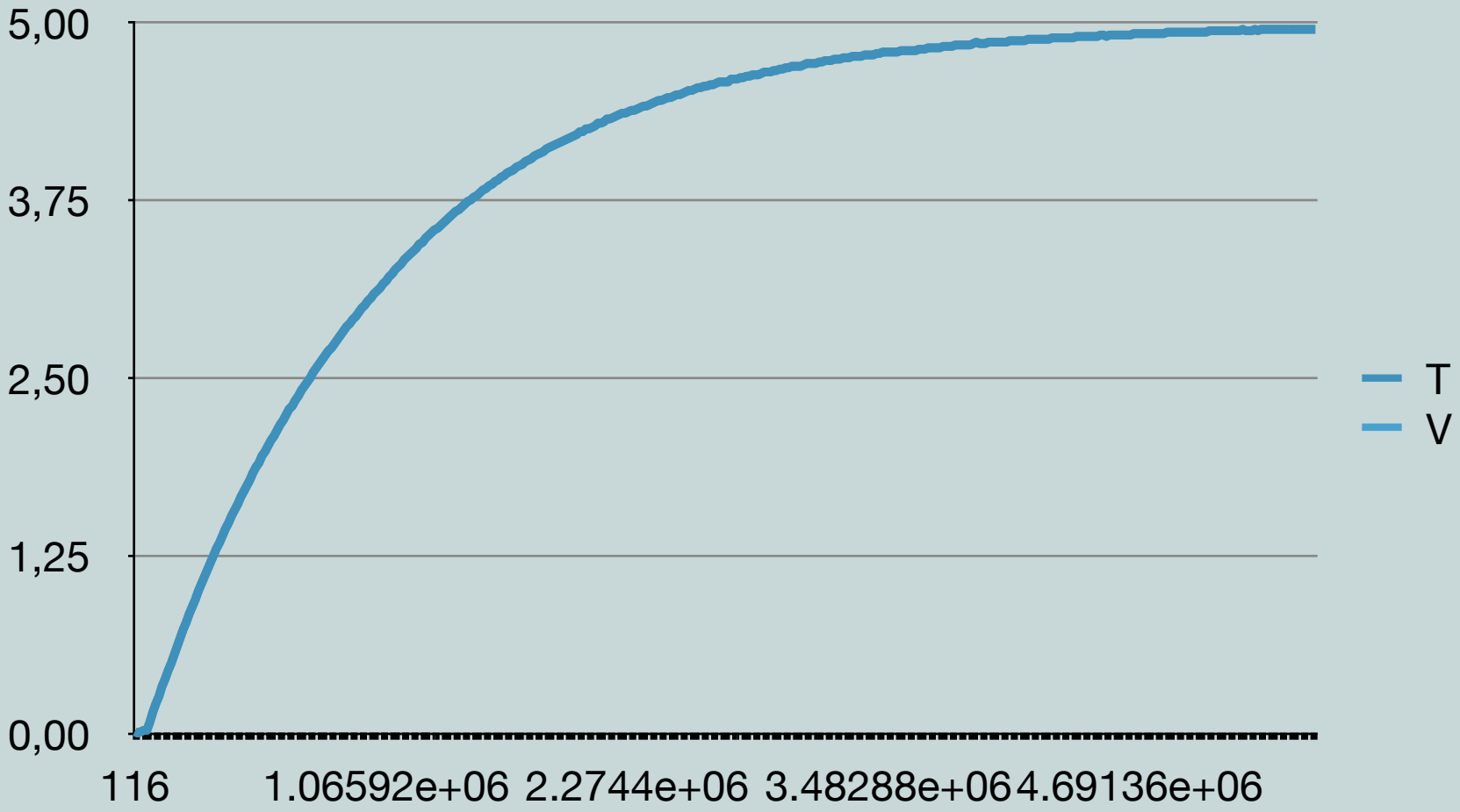
5,00
3,75
2,50
1,25
0,00
116
1.06592e+06
2.2744e+06
3.48288e+06
4.69136e+06
T
V

Low-pass filter

The capacitor is a reactive component who opposes almost no impedance to high-frequency signals...

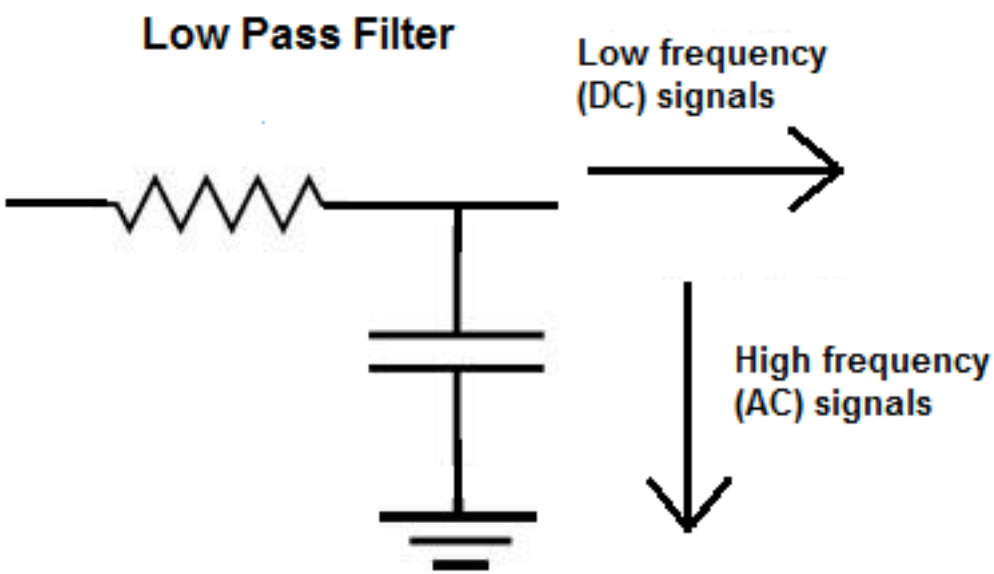

High-pass filter

The capacitor is a reactive component who opposes almost no impedance to high-frequency signals...

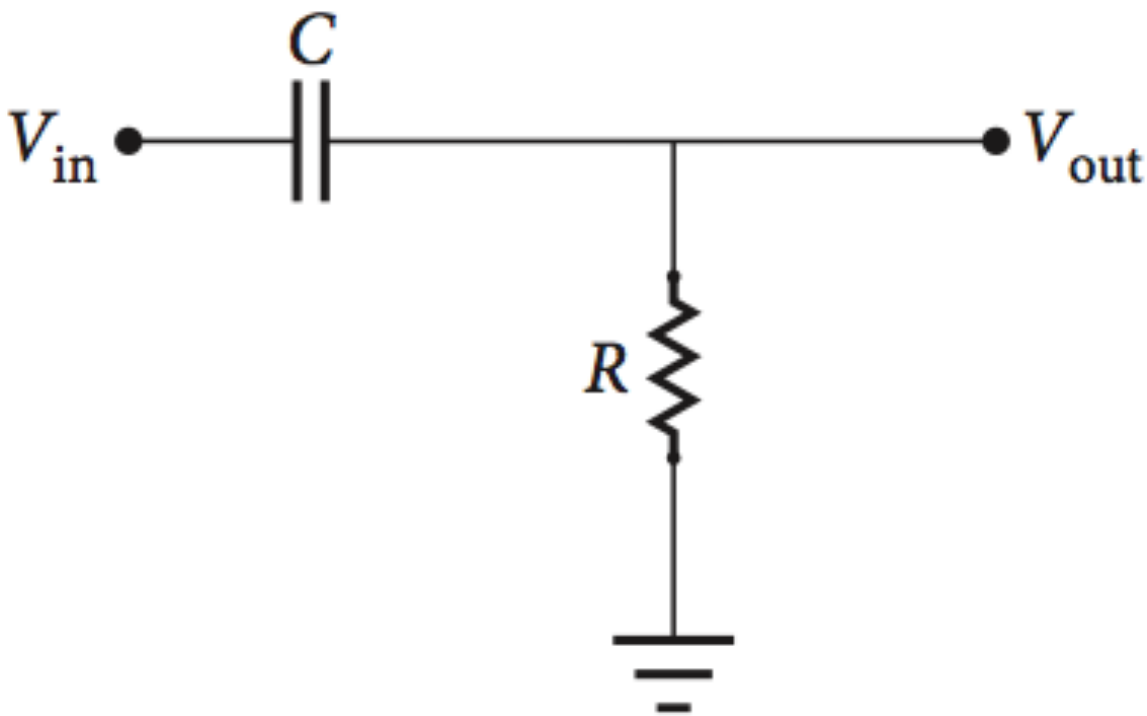

Capacitive touch

You can implement a capacitive touch sensor, with almost no extra hardware.

The user's body, together with the plate (foil) forms a capacitor (dielectric=air).. The trick works as such:

→ the **send** pin provides a current that will charge the capacitor (the speed/sensitivity depends on the resistor value)

→ once the capacitor charges, the **receive** pin will toggle to the same state as the **send** pin

Capacitive touch

The user’s body, together with the plate (foil) forms a capacitor (dielectric=air).. The trick works as such:

→ the **send** pin provides a current that will charge the capacitor (the speed/sensitivity depends on the resistor value)

→ once the capacitor charges, the **receive** pin will toggle to the same state as the **send** pin

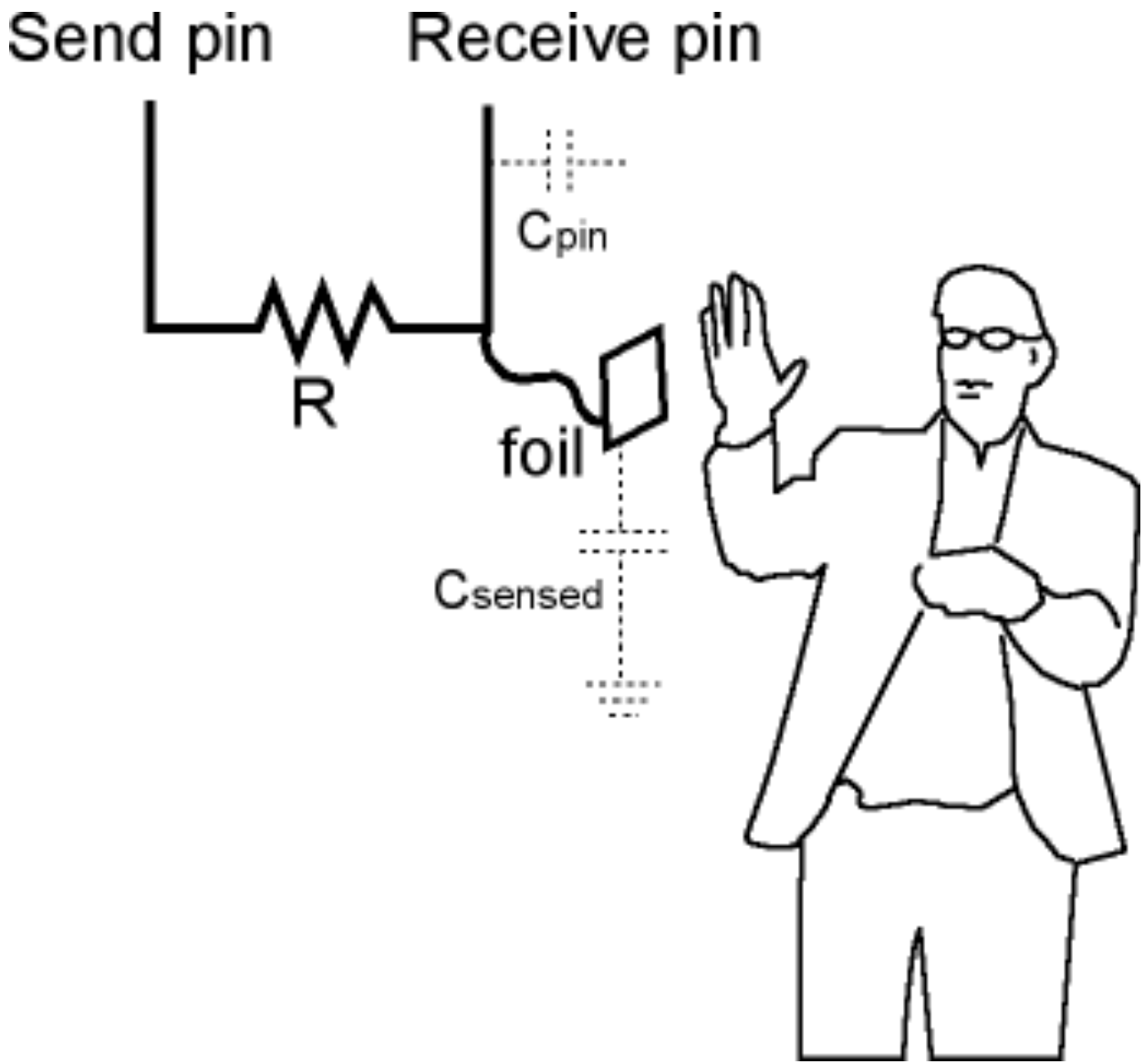
Send pin
Receive pin
Cpin
R
foil
Csensed

Exercise #8 / Capacitive touch

Exercise #8 / Capacitive touch

Step 1: install the **CapacitiveSensor** library:

→ Get the zip from (or use the Arduino library manager):
https://github.com/PaulStoffregen/CapacitiveSensor

→ Unzip, and copy it to Arduino/hardware/libraries

→ To add the library to your sketch select
Sketch → Import Library → CapacitiveSensor

discard | Arduino IDE 2.0.4

Arduino Uno

CapacitiveSensor

Type: All

Topic: All

CapacitiveSensor by **Paul Bagder, Paul Stoffregen**
The capacitiveSensor library turns two or more Arduino pins into a capacitive sensor, which can sense the electrical capacitance of the human body. All the sensor setup requires is a medium to high value resistor and a piece of wire and a small (to large) piece of aluminum foil on the end. At its most sensitive, the sensor will start to sense a hand or body inches away from the sensor.
Create capacitive sensors that can detect touch or proximity.
More info
0.5.1 INSTALL

FastCapacitiveSensor by **Nyanyan**
It can get values from
A library to use capacitive sensors quickly
More info
1.0.6 INSTALL

r89m CapacitiveButton by **Richard Miles <arduino@fast-chat.co.uk>**
An extension to Buttons, providing support for Capacitive Buttons. Handle CapacitiveButtons, powered by the CapacitiveSensor library
More info
1.0.0 INSTALL

discard.ino

```
 *
 * Week 9
 * Exercice 7
 * analog pin used to measure the voltage of the capacitor
 *
 * @authors: Sérgio M. Rebelo, Ana Cláudia Rodrigues, and Tiago Cruz
 * @since:   16-03-2023
 */


#define analogPin 0
// capacitor charging pin
#define chargePin 3

unsigned long startTime;
unsigned int readVolt;

void setup () {
  pinMode (chargePin, OUTPUT );
  digitalWrite (chargePin, LOW );
  Serial.begin (9600);              // initialize serial communication
  startTime = micros ();
}

void loop(){
  /* Discharge capacitor */
  // load set pin as output - low impedance
  pinMode (chargePin, OUTPUT );
  digitalWrite (chargePin, LOW );

  readVolt = analogRead (analogPin);   // read the value
  // wait until the capacitor is discharged
  while (readVolt> 0) {
    // print the analog value
    Serial.println ((readVolt*(5/1024.0)));
    readVolt = analogRead (analogPin);   // read voltage;
```

Output

```
Sketch uses 3764 bytes (11%) of program storage space. Maximum is 32256 bytes.
Global variables use 202 bytes (9%) of dynamic memory, leaving 1846 bytes for local variables. Maximum is 2048 bytes.
```

Ln 38, Col 22 Arduino Uno [not connected] 2

Exercise #8 / Capacitive touch

Step 2: Assemble the following circuit:
(note: it's a 1MOhm resistor)

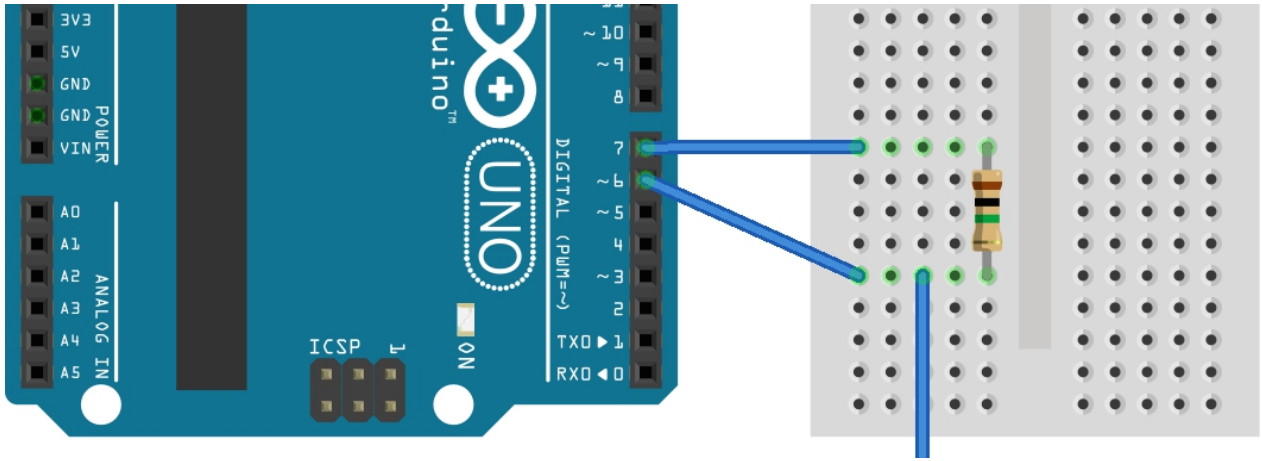

Exercise #8 / Capacitive touch

Step 3: Place a square of aluminium foil on the loose blue wire. Make some experiments, covering the foil with paper or plastic.

capacitive | Arduino IDE 2.0.4

Arduino Uno

capacitive.ino

```
 * @since:   16-03-2023
 * @based:   CapacitiveSensor library examples
 */

#include <CapacitiveSensor.h>

/*
 * CapitiveSense Library Demo Sketch, Paul Badger 2008
 * Uses a high value resistor e.g. 10M between
 * send pin and receive pin
 * Receive pin is the sensor pin - try different
 * amounts of foil/metal on this pin
 */

// 10M resistor between pins 7 & 6, // pin 6 is sensor pin, add a wire and or foil if desired
CapacitiveSensor   cs_7_6 = CapacitiveSensor(7,6);

void setup() {
 // turn off autocalibrate on channel 1 - just as an example
   cs_7_6.set_CS_AutocaL_Millis(0xFFFFFFFF);
   Serial.begin(9600);
}

void loop() {
    long start = millis();
    long total1 =  cs_7_6.capacitiveSensor(30);

    // Uncomment the next lines to check the sensor output values
    //Serial.print(millis() - start); // check performance in ms
    //Serial.print("\t");             // tab character spacing
    // Serial.println(total1);         // print sensor output 1

    if (total1>450) Serial.println("touch");
    // arbitrary delay to limit data to serial port
    delay(10);
}
```

Output Serial Monitor

Message (Enter to send message to 'Arduino Uno' on '/dev/cu.usbmodem1101') New Line 9600 baud

Ln 42, Col 66 Arduino Uno on /dev/cu.usbmodem1101

Code: https://github.com/sergiomrebelo/fctuc-mdm-ti/tree/main/PL9%E2%80%93Capacitors/capacitive-sensor

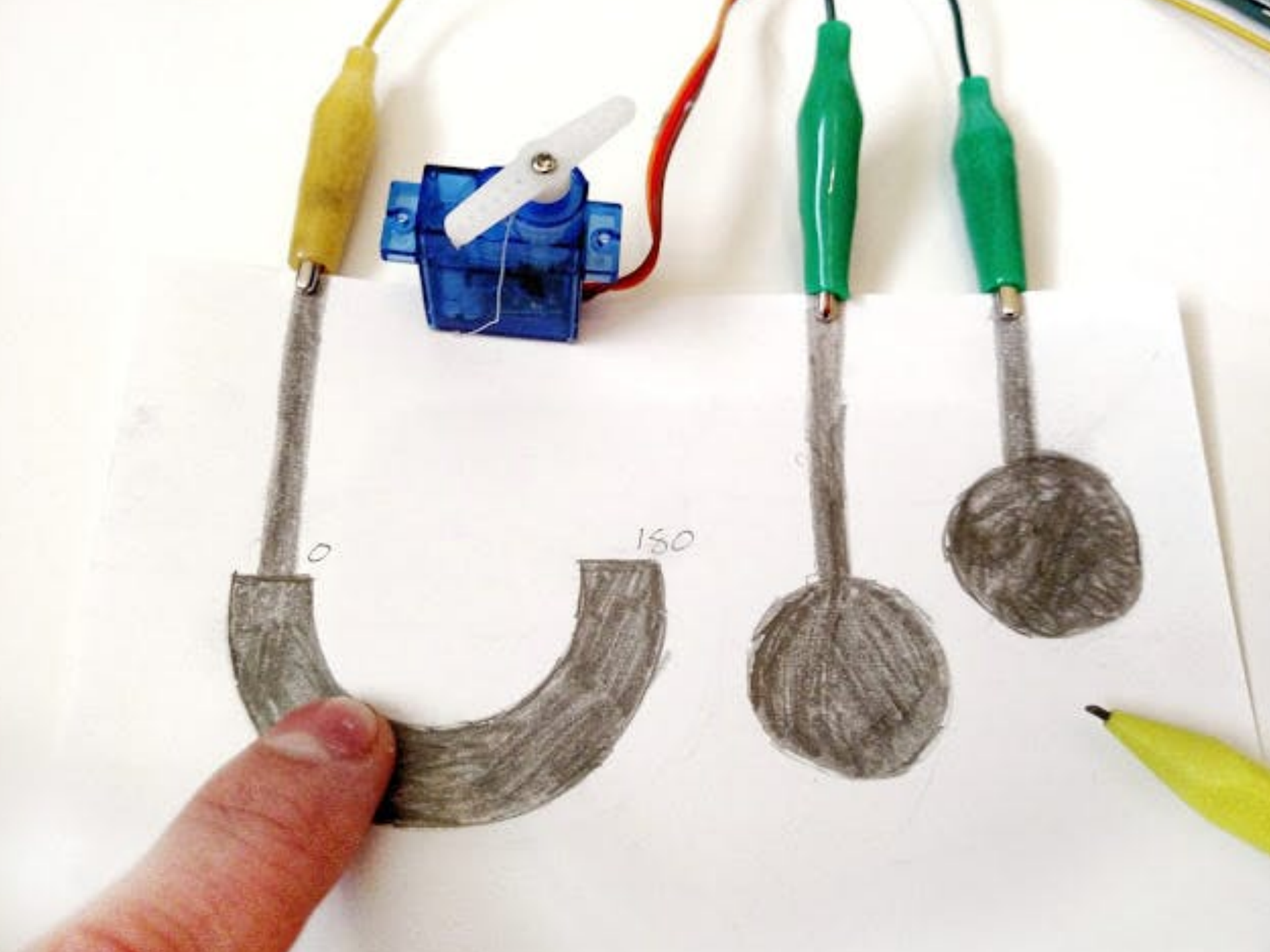
0
180