PL 11
Interface Technologies

2022/2023

Special Digital Sensors

PIR sensor

PIR sensor

They are often referred to as PIR, "Passive Infrared", "Pyroelectric", or "IR motion" sensors.

PIR sensor

PIR sensor

PIR sensors allow you to sense motion, almost always used to detect whether a human has moved in or out of the sensors range.

PIR sensor

They are small, inexpensive, low-power, easy to use and don't wear out with time. For that reason they are commonly found in appliances and gadgets used in homes or businesses.

PIR sensor

Everything emits some low level radiation, and the hotter something is, the more radiation is emitted.

PIR sensor

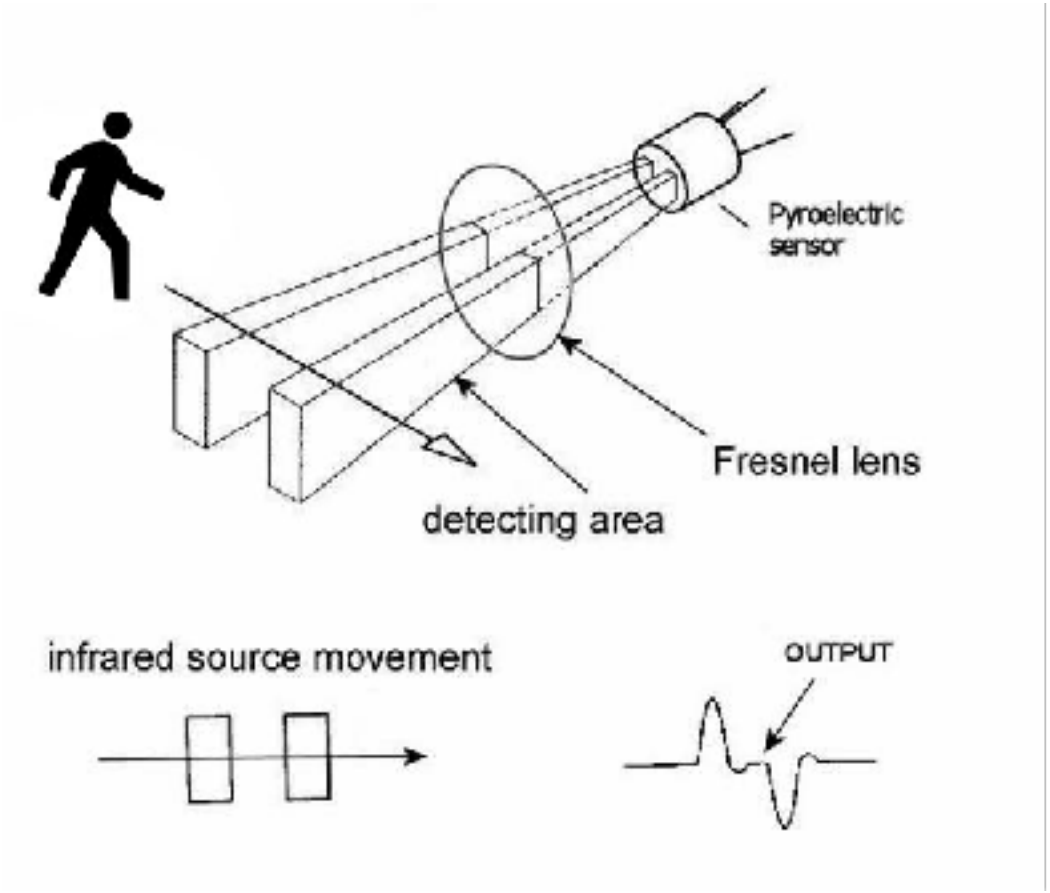
Pyroelectric sensor
Fresnel lens
detecting area
infrared source movement
OUTPUT

PIR sensor

How does it work?

1. When the sensor is idle, both slots detect the same amount of IR, the ambient amount radiated from the room or walls or outdoors.

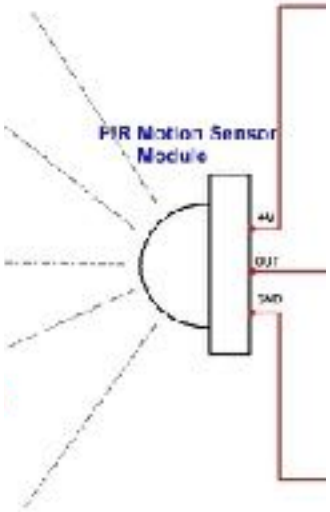

PIR sensor

How does it work?

2. Inside, it calculates the difference between the two receptors of infrared.

PIR sensor

How does it work?

3. When a warm body like a human or animal passes by, it first intercepts one half of the PIR sensor, which causes a ***positive*** *differential* change between the two halves.

PIR sensor

How does it work?

4. When the warm body leaves the sensing area, the reverse happens, whereby the sensor generates a **negative** differential change. These change pulses are what is detected.

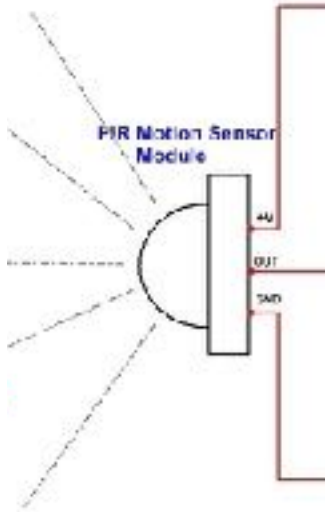

PIR sensor

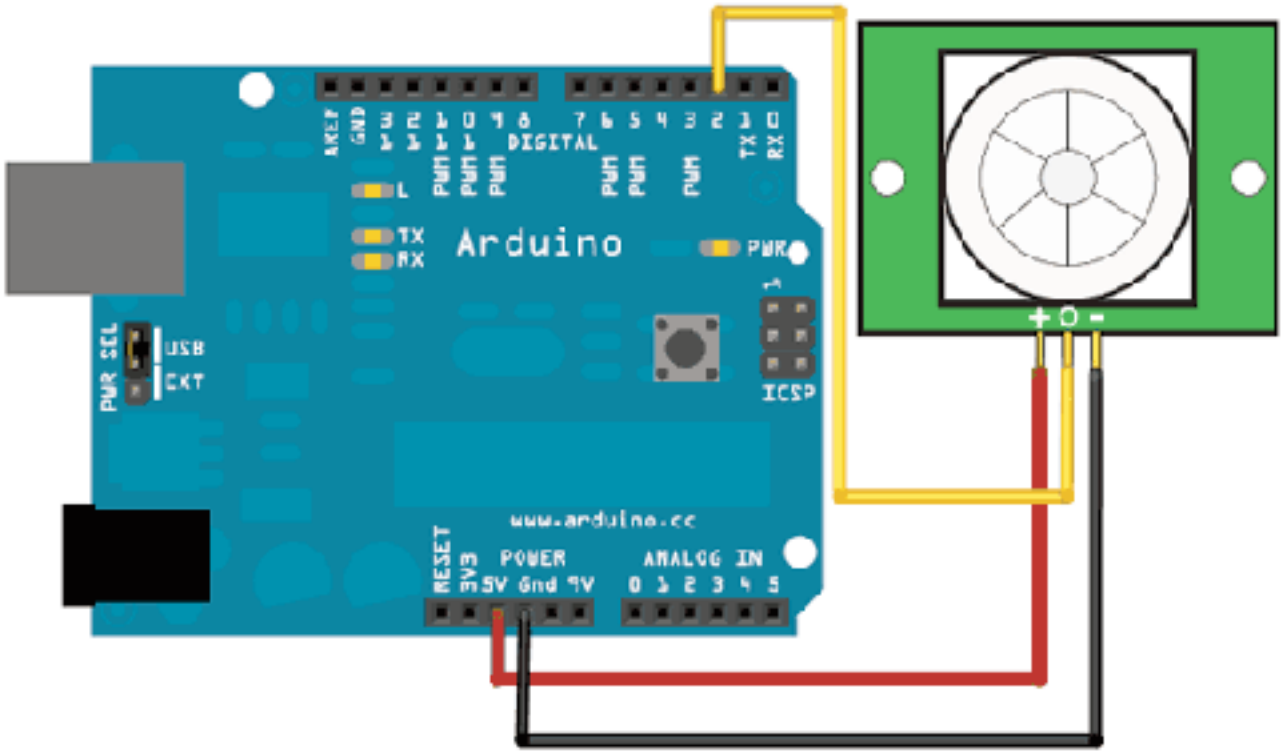
AREF
GND
13 12 11 10 9 8
7 6 5 4 3 2 1 0
DIGITAL
PWM
PWM
PWM
PWM
PWM
PWM
TX
RX
L
TX
RX
Arduino
PWR
PWR SEL
USB
EXT
ICSP
www.arduino.cc
RESET
3V3
5V
POWER
Gnd
Gnd
9V
ANALOG IN
0 1 2 3 4 5
+ O -

PIR sensor

```
int ledPin = 13;    // choose the pin for the LED
int inputPin = 2;   // choose the input pin (for PIR
sensor)
int pirState = LOW; // we start, assuming no motion
detected
int val = 0;        // variable for reading the pin
status

void setup() {
  pinMode(ledPin, OUTPUT);   // declare LED as output
  pinMode(inputPin, INPUT);  // declare sensor as input

  Serial.begin(9600);
}
```

PIR sensor

```
void loop(){
  val = digitalRead(inputPin);  // read input value
  if (val == HIGH) {            // check if the
input is HIGH
    digitalWrite(ledPin, HIGH);  // turn LED ON
    if (pirState == LOW) {
      // we have just turned on
      Serial.println("Motion detected!");
      // We only want to print on the output change,
not state
      pirState = HIGH;
    }
  } else {
    digitalWrite(ledPin, LOW); // turn LED OFF
    if (pirState == HIGH){
      // we have just turned of
      Serial.println("Motion ended!");
      // We only want to print on the output change,
not state
      pirState = LOW;
    }
  }
}
```

Semiconductors

How Semiconductors Work

- It is thanks to them that we have transistors and microprocessors.

How Semiconductors Work

- Doping: adding small amounts of other elements to create additional protons or electrons

How Semiconductors Work

- Doping: adding small amounts of other elements to create additional protons or electrons
- P-Type: dopants lack a fourth valence (4th) electron (Boron, Aluminum)

How Semiconductors Work

- Doping: adding small amounts of other elements to create additional protons or electrons
- P-Type: dopants lack a fourth valence electron (Boron, Aluminum)
- N-Type: dopants have an additional (5th) valence electron (Phosphorus, Arsenic)

How Semiconductors Work

- Doping: adding small amounts of other elements to create additional protons or electrons
- P-Type: dopants lack a fourth valence electron (Boron, Aluminum)
- N-Type: dopants have an additional (5th) valence electron (Phosphorus, Arsenic)
- Importance: Current only flows from P to N

Diodes

Diodes and Bias

- Diode: simple P-N junction.

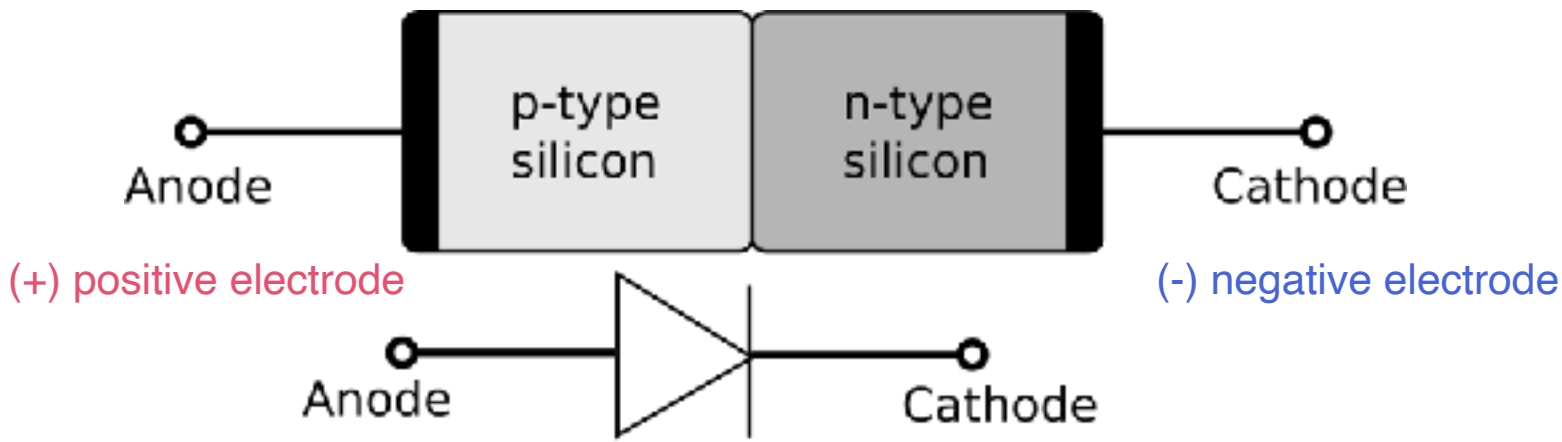

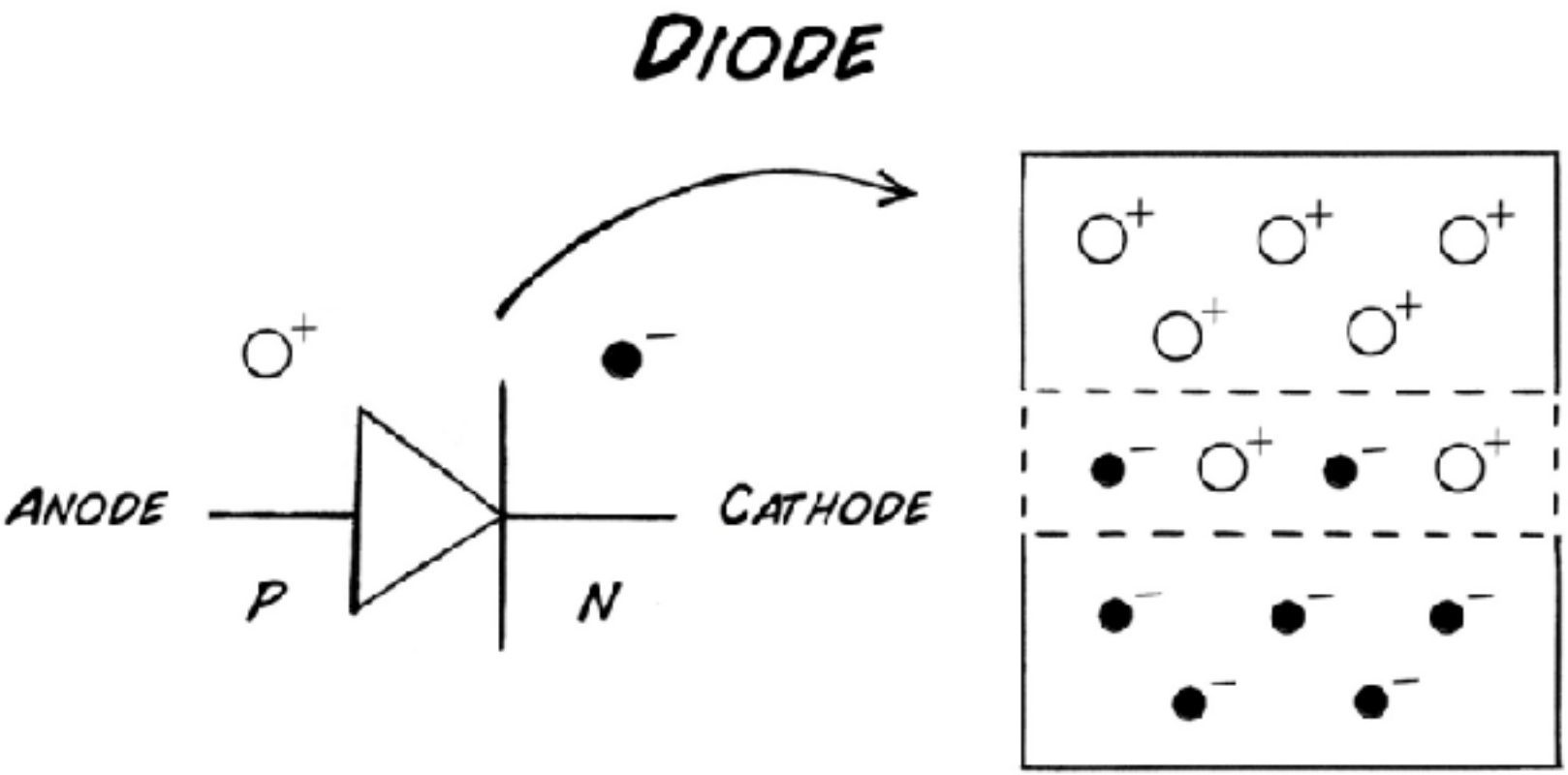

Source: http://wiki.backyardbrains.com/Experiment:_Transistors!

Diodes and Bias

<u>Forward Bias</u>: allows current to flow from P to N.

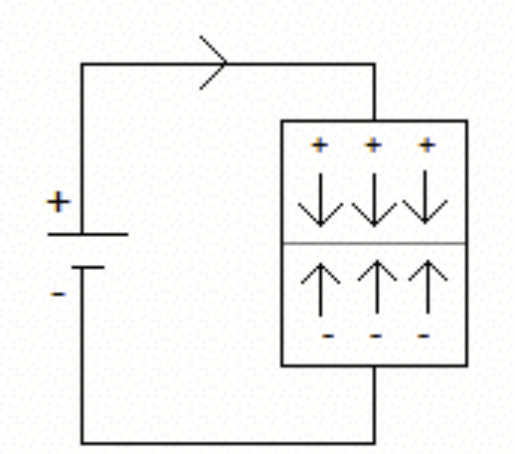

<u>Reverse Bias</u>: no current allowed to flow from N to P.

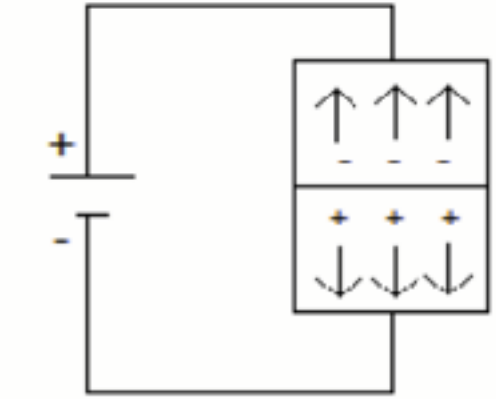

Diodes and Bias

Breakdown Voltage: sufficient N to P voltage of a Zener Diode will allow for current to flow in this direction.

Diodes and Bias

<u>Breakdown Voltage</u>

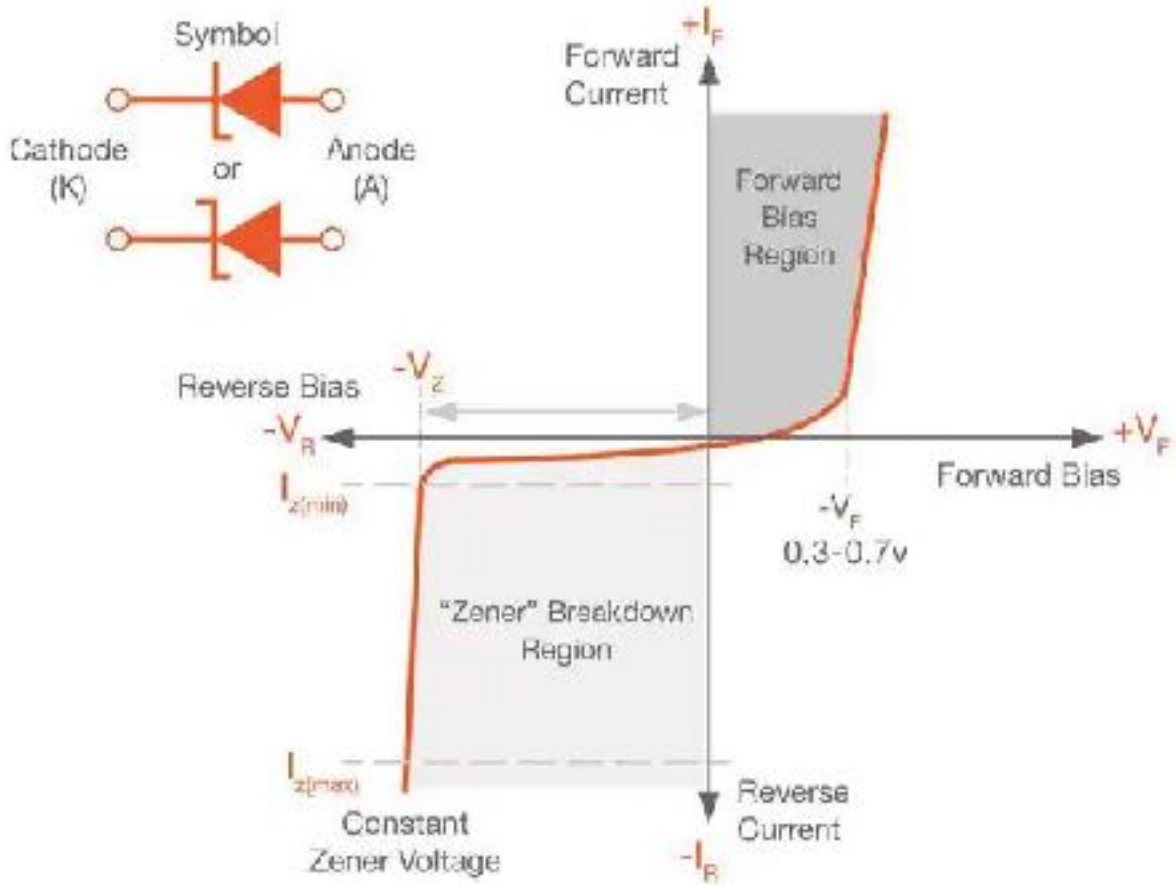

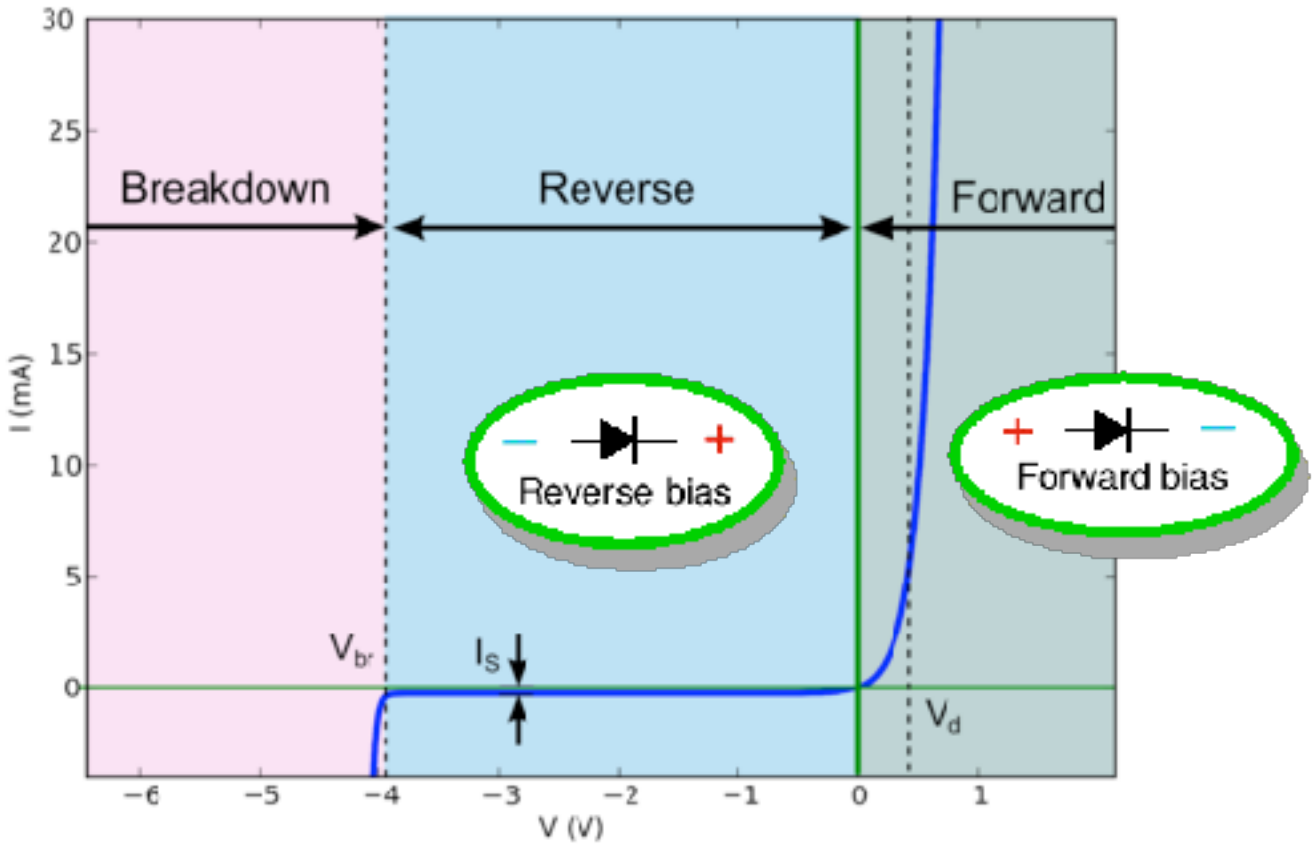

Source: https://www.digikey.com.au/en/articles/techzone/2012/apr/structural-defects-undermine-led-luminosity

Diodes and Bias

They allow us to rectify oscillating current

They are very important in the conversion of AC to DC - as it can cut the negative values

Diodes

Translucid (e.g. leds)and Crystal Diodes

Crystal Diodes have a black ring indicating the current direction (black - negative)

A (rather) dumb experiment…

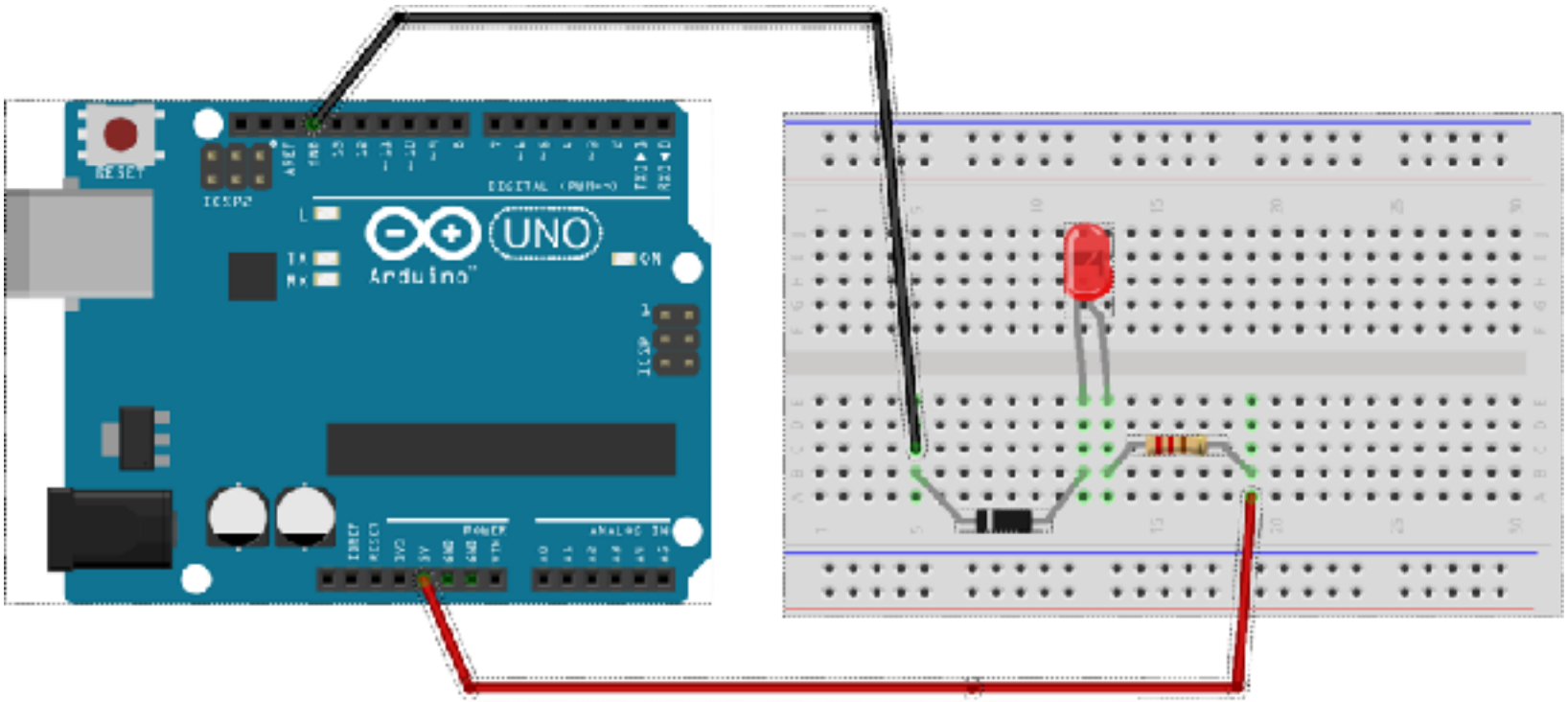

Now reverse the diode. What happens ?

https://www.tinkercad.com/things/byKiDazj54Y

Transistors

What is a transistor ?

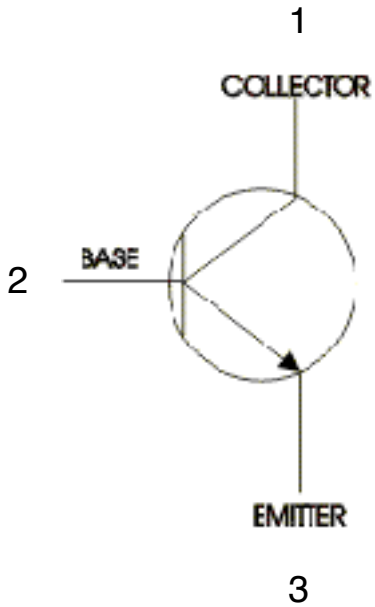

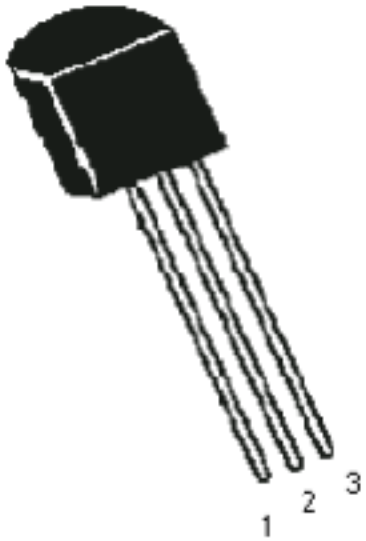

BC547 NPN pinout

Pin Configuration:
1. Collector
2. Base
3. Emitter

Source: BC547 data sheet @ https://www.farnell.com/datasheets/410427.pdf

What is a Transistor?

In simple terms - it is as if we had two diodes encapsulated.

What is a Transistor?

Semiconductors: ability to change from conductor to insulator

What is a Transistor?

Semiconductors: ability to change from conductor to insulator

Can either allow current or prohibit current to flow

What is a Transistor?

Semiconductors: ability to change from conductor to insulator

Can either allow current or prohibit current to flow

Useful as a switch, but also as an amplifier

What is a Transistor?

Semiconductors: ability to change from conductor to insulator

Can either allow current or prohibit current to flow

Useful as a switch, but also as an amplifier

Essential part of many technological advances

The Transistor is Born

Bell Labs (1947): Bardeen, Brattain, and Shockley

Originally made of germanium

Current transistors made of doped silicon

Source: https://www.extremetech.com/extreme/175004-the-genesis-of-the-transistor-the-single-greatest-discovery-in-the-last-100-years

Bipolar Junction Transistor (BJT)

<u>3 adjacent regions</u> of doped Si

- Base (thin layer, less doped)
- Collector
- Emitter

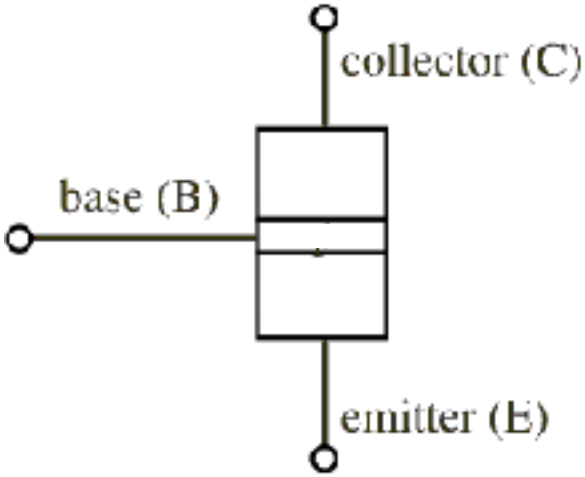

Developed by Shockley (1949)

Bipolar Junction Transistor (BJT)

They have polarity:

- Emitter (E): negative side ,
- Collector (C): positive side

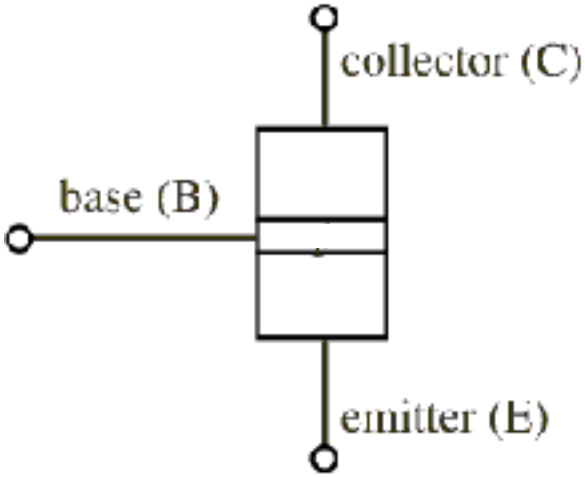

Developed by Shockley (1949)

Bipolar Junction Transistor (BJT)

<u>2 types</u> of BJT: (1) npn. (2) pnp.

<u>Most common</u>: npn (focus on it).

(1) npn bipolar
junction transistor

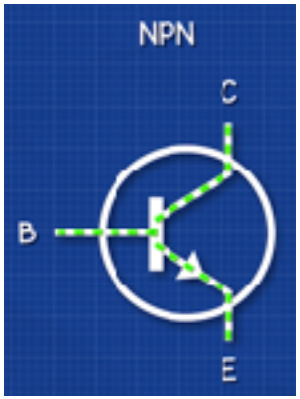

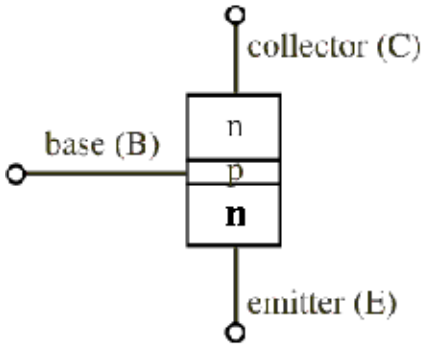

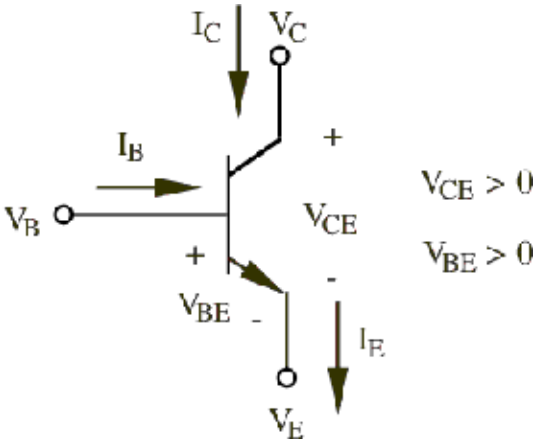

Operation region summary

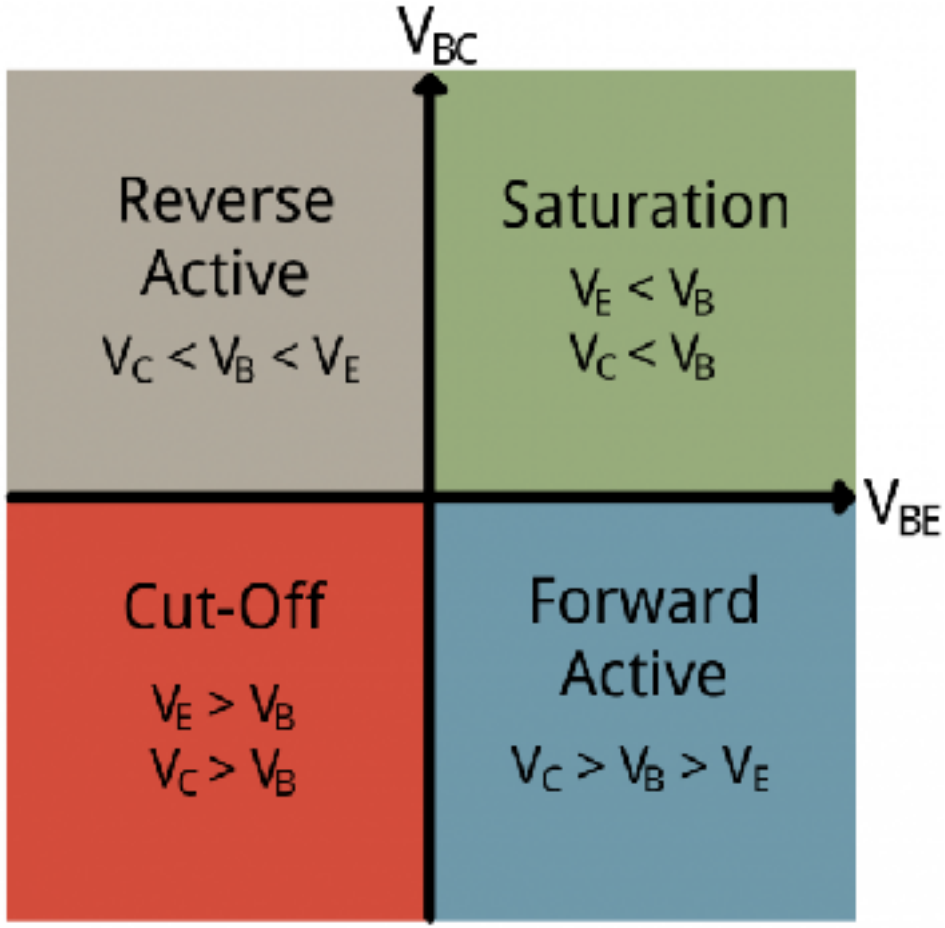

Operation region summary

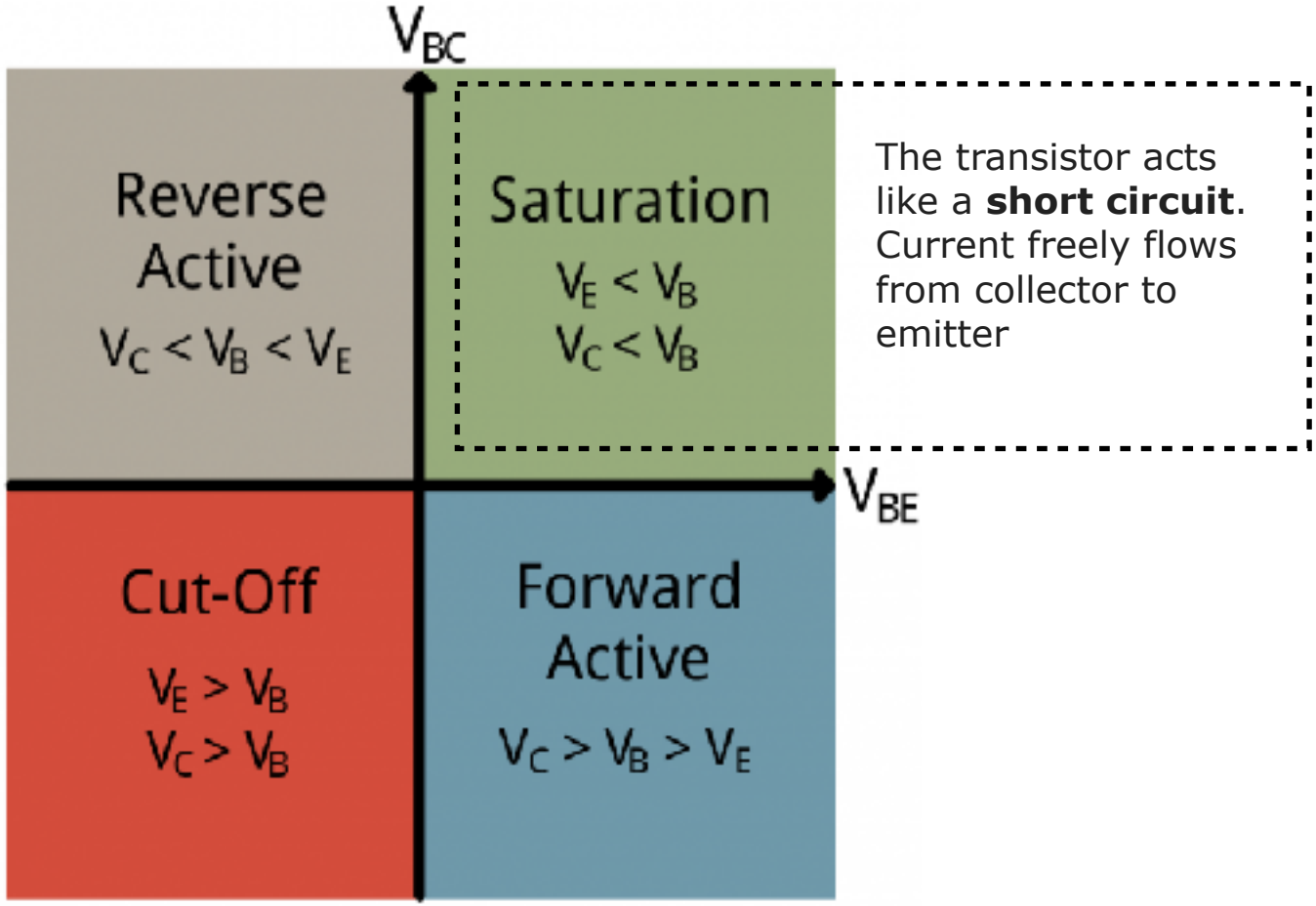

The transistor acts like a **short circuit**. Current freely flows from collector to emitter

Operation region summary

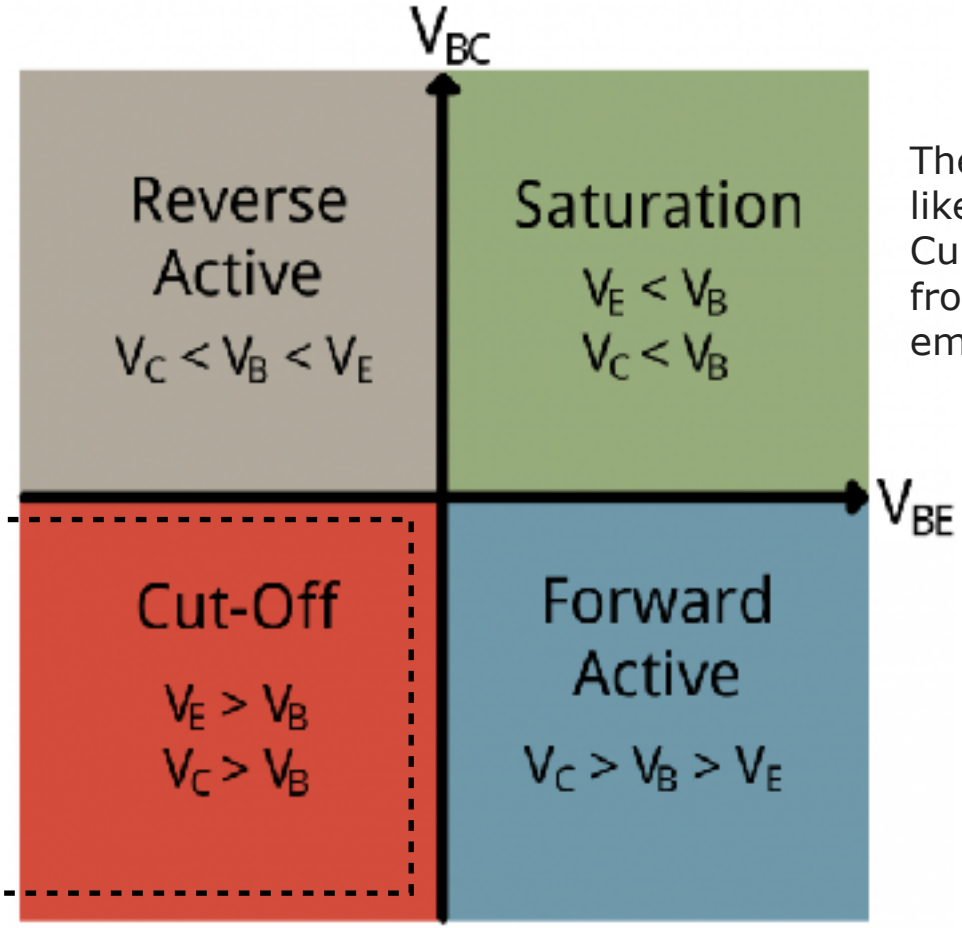

The transistor acts like a **short circuit**. Current freely flows from collector to emitter

The transistor acts like an **open circuit**. No current flows from collector to emitter.

Operation region summary

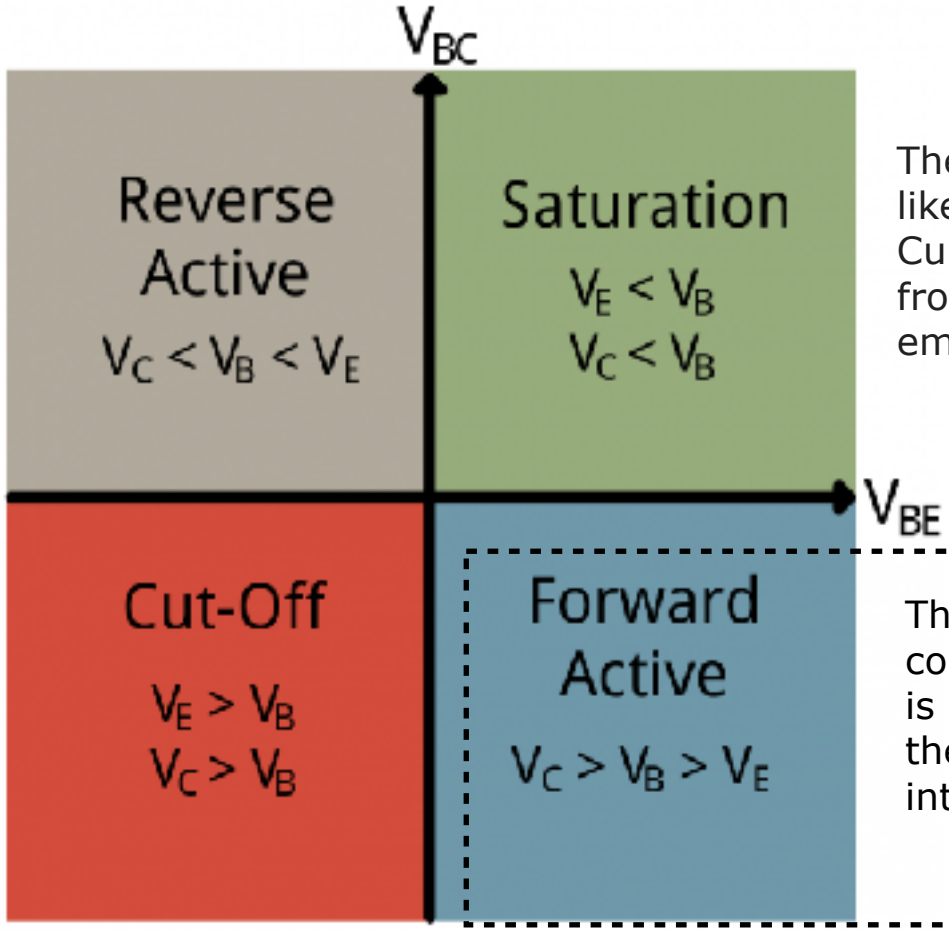

The transistor acts like a **short circuit**. Current freely flows from collector to emitter

The transistor acts like an **open circuit**. No current flows from collector to emitter.

The current from collector to emitter is **proportional** to the current flowing into the base.

Operation region summary

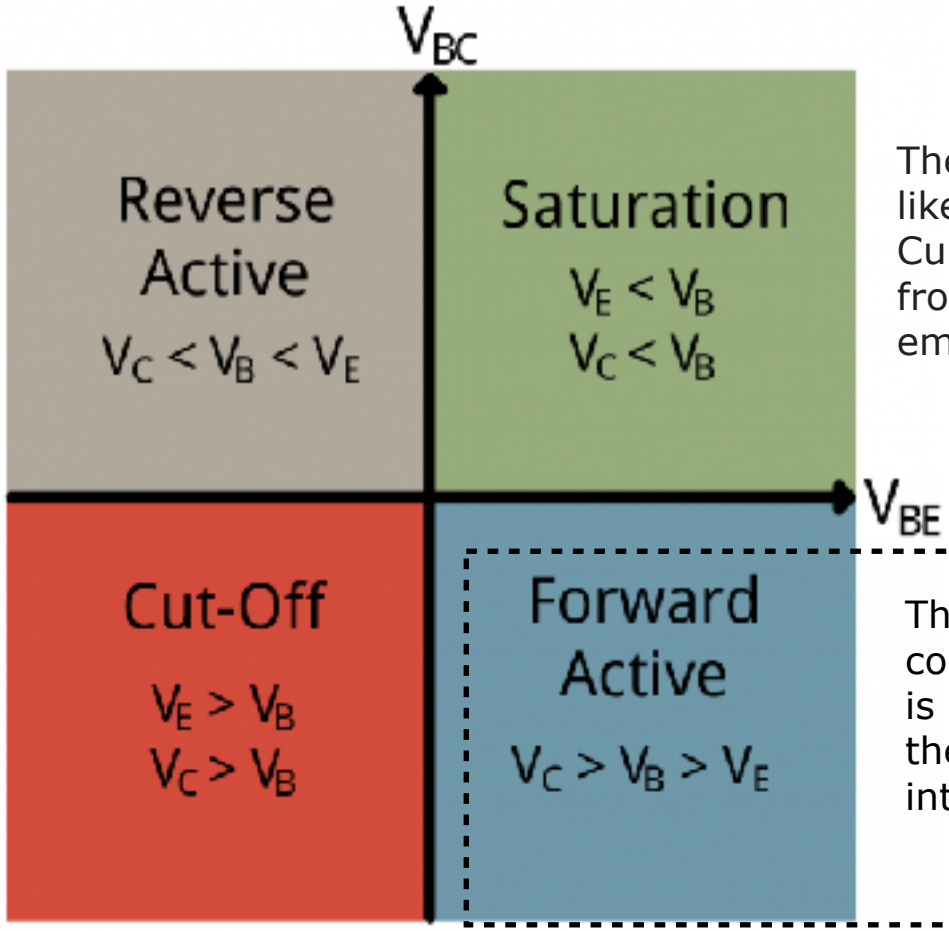

The transistor acts like a **short circuit**. Current freely flows from collector to emitter

The transistor acts like an **open circuit**. No current flows from collector to emitter.

The current from collector to emitter is **proportional** to the current flowing into the base.

Operation region summary

Like active mode, the current is proportional to the base current, but it **flows in reverse**.

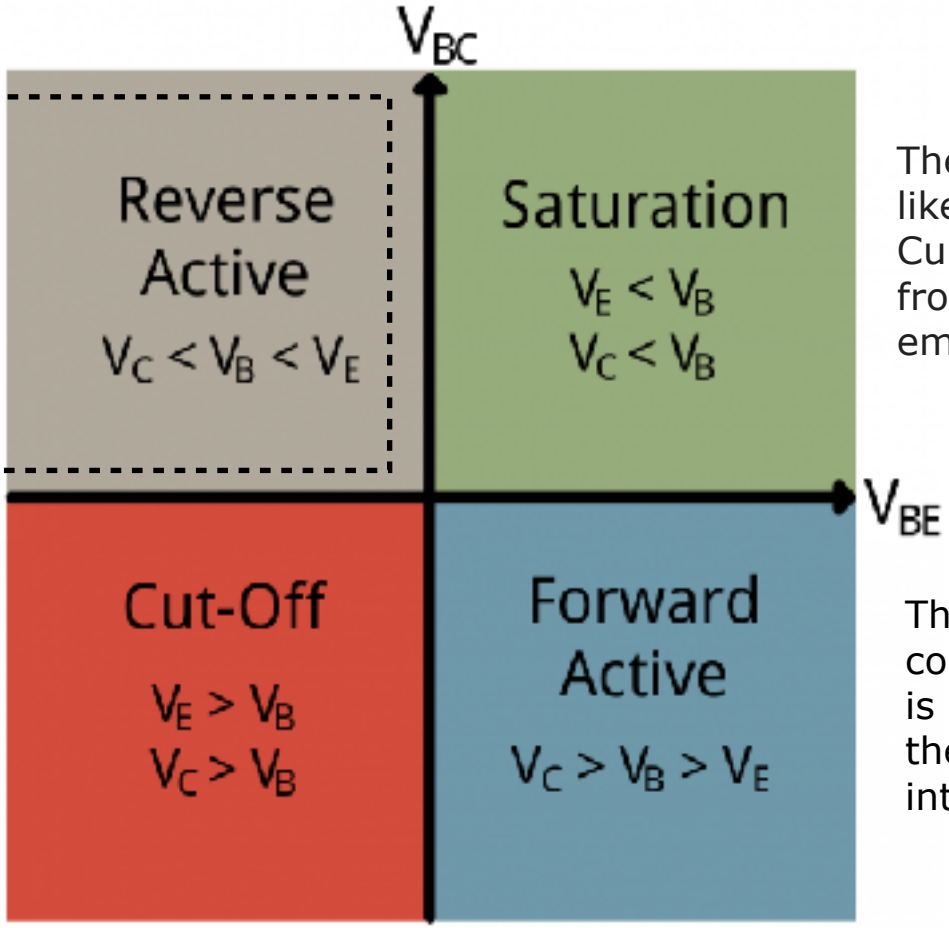

The transistor acts like a **short circuit**. Current freely flows from collector to emitter

The transistor acts like an **open circuit**. No current flows from collector to emitter.

The current from collector to emitter is **proportional** to the current flowing into the base.

Common Emitter characteristics

Collector current controlled by the collector circuit. (Switch behavior)

In full saturation V_{CE}=0.2V.

Collector current proportional to Base current

The avalanche multiplication of current through collector junction occurs: to be avoided

No current flows

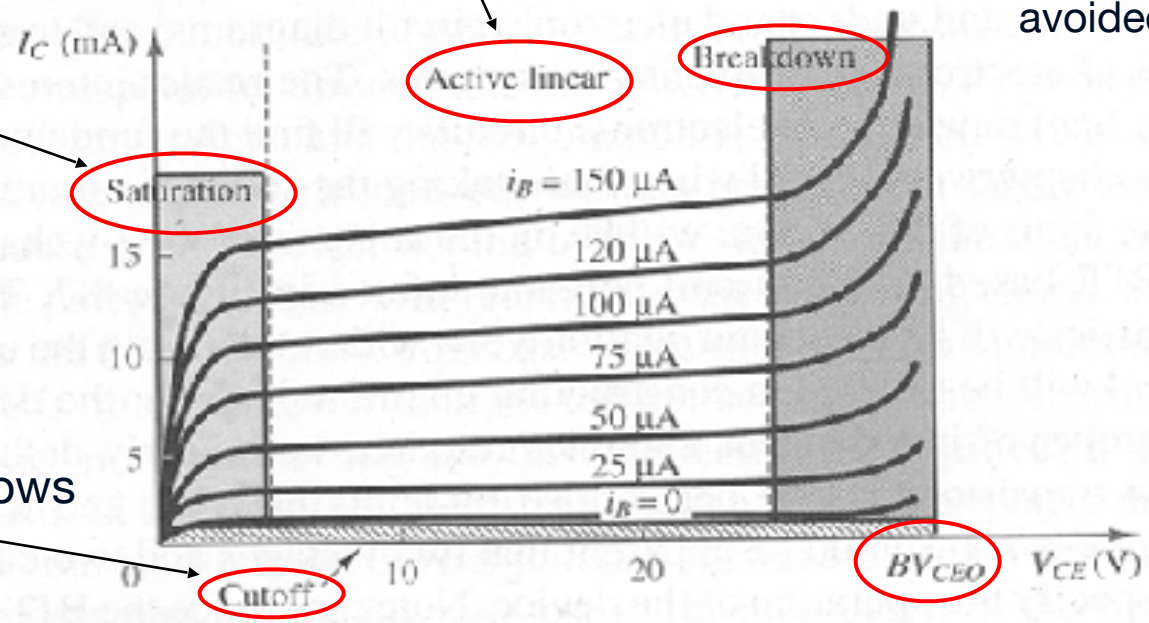

Figure 8.9(b) The collector-emitter output characteristics of a BJT

Sources:
"Introduction to Mechatronics and Measurement Systems" by D.G. Alciatore, McGraw-Hill "Microelectronics" by J. Millman.

BJT as Switch

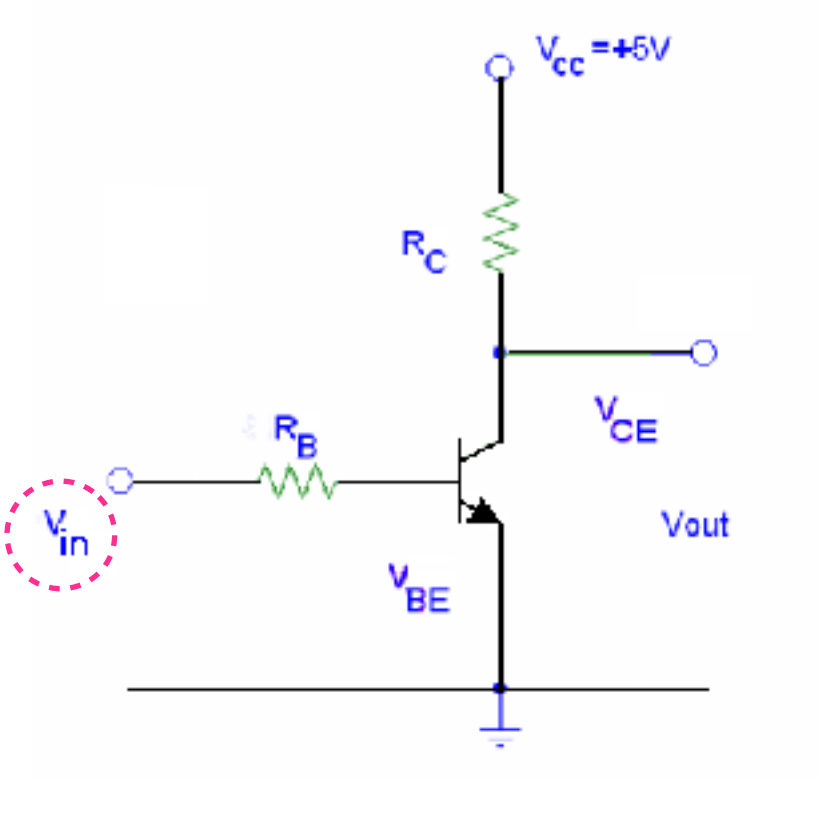

- V_{in} (**Low**) < 0.7 V
  - BE junction not forward biased
  - Cutoff region
  - No current flows
  - $V_{out} = V_{CE} = V_{cc}$
- V_{out} = **High**

.....

- V_{in} (**High**)
  - BE junction forward biased (V_{BE}=0.7V)
  - Saturation region
  - V_{CE} small (~0.2 V for saturated BJT)
  - V_{out} = small
  - $I_B = (V_{in}-V_B)/R_B$
- V_{out} = **Low**

BJT as Switch

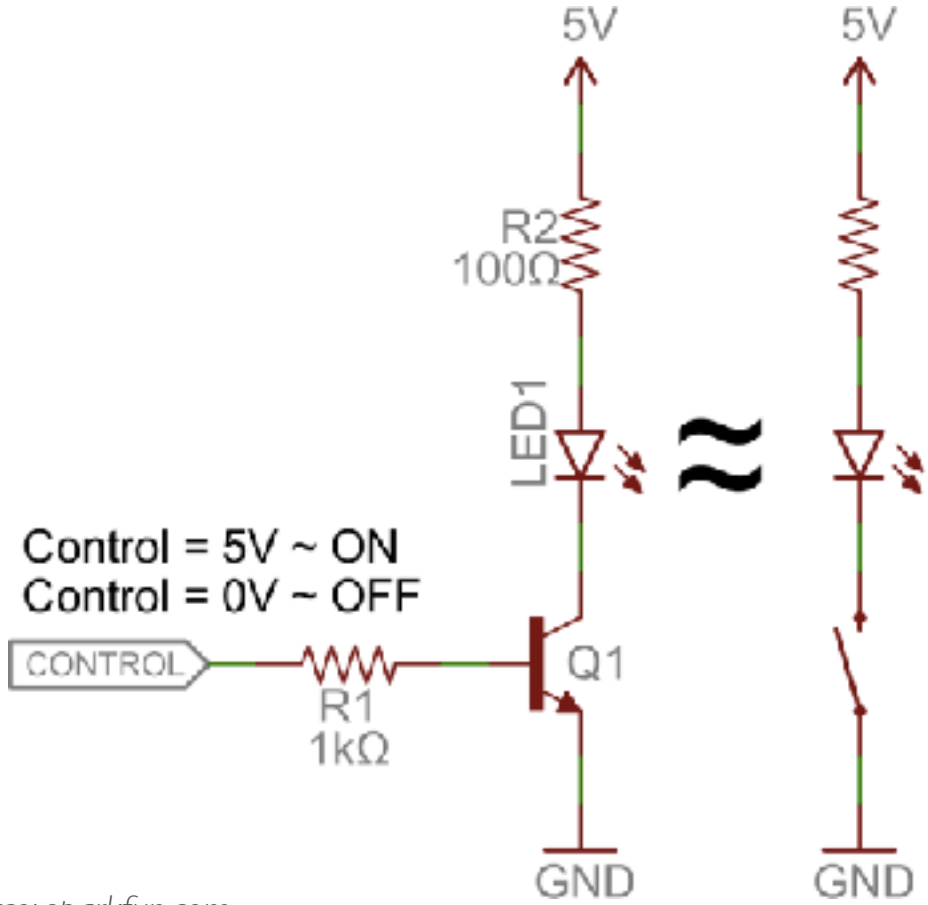

Source: sparkfun.com

Transistor as amplifier

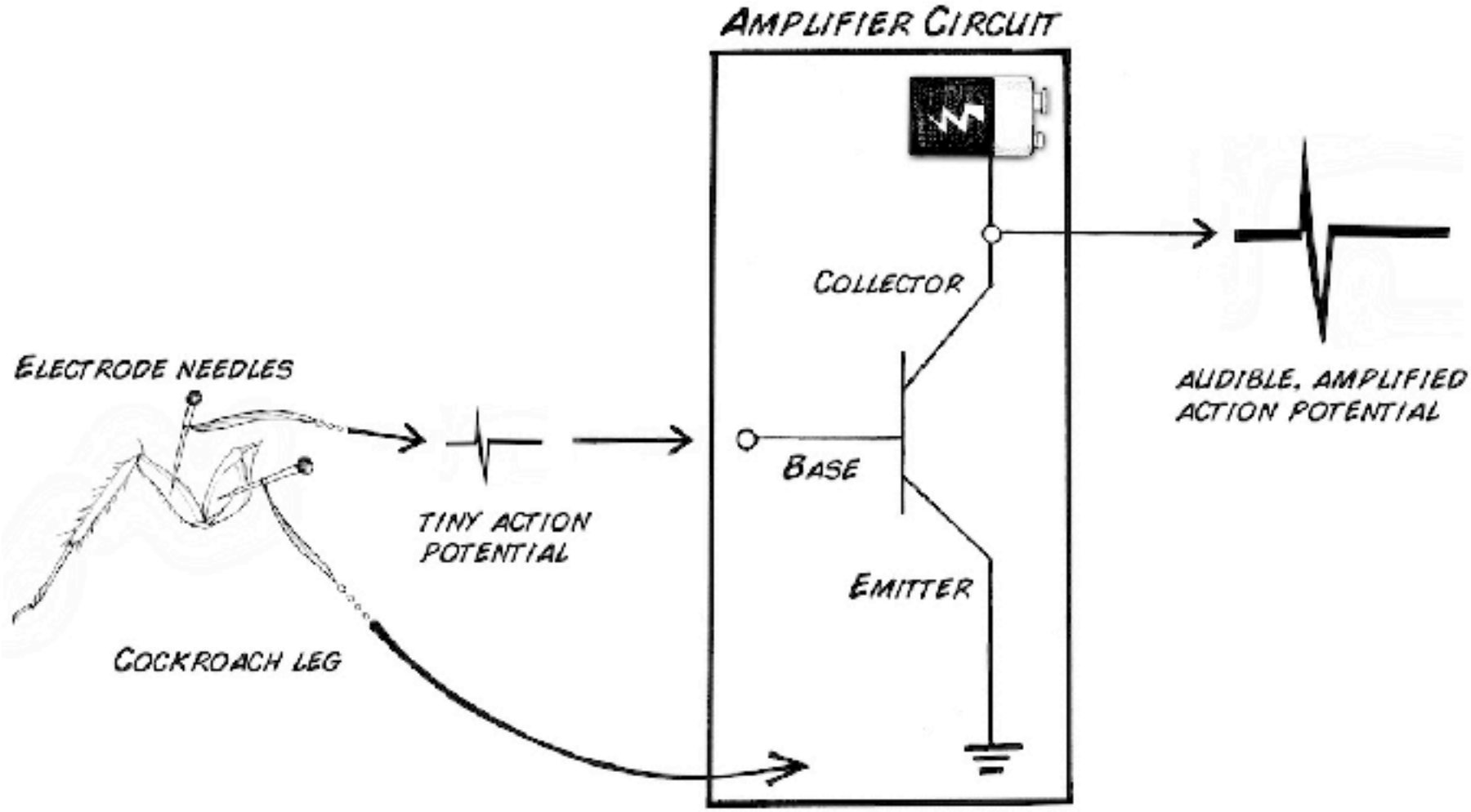

A slightly smarter experiment…

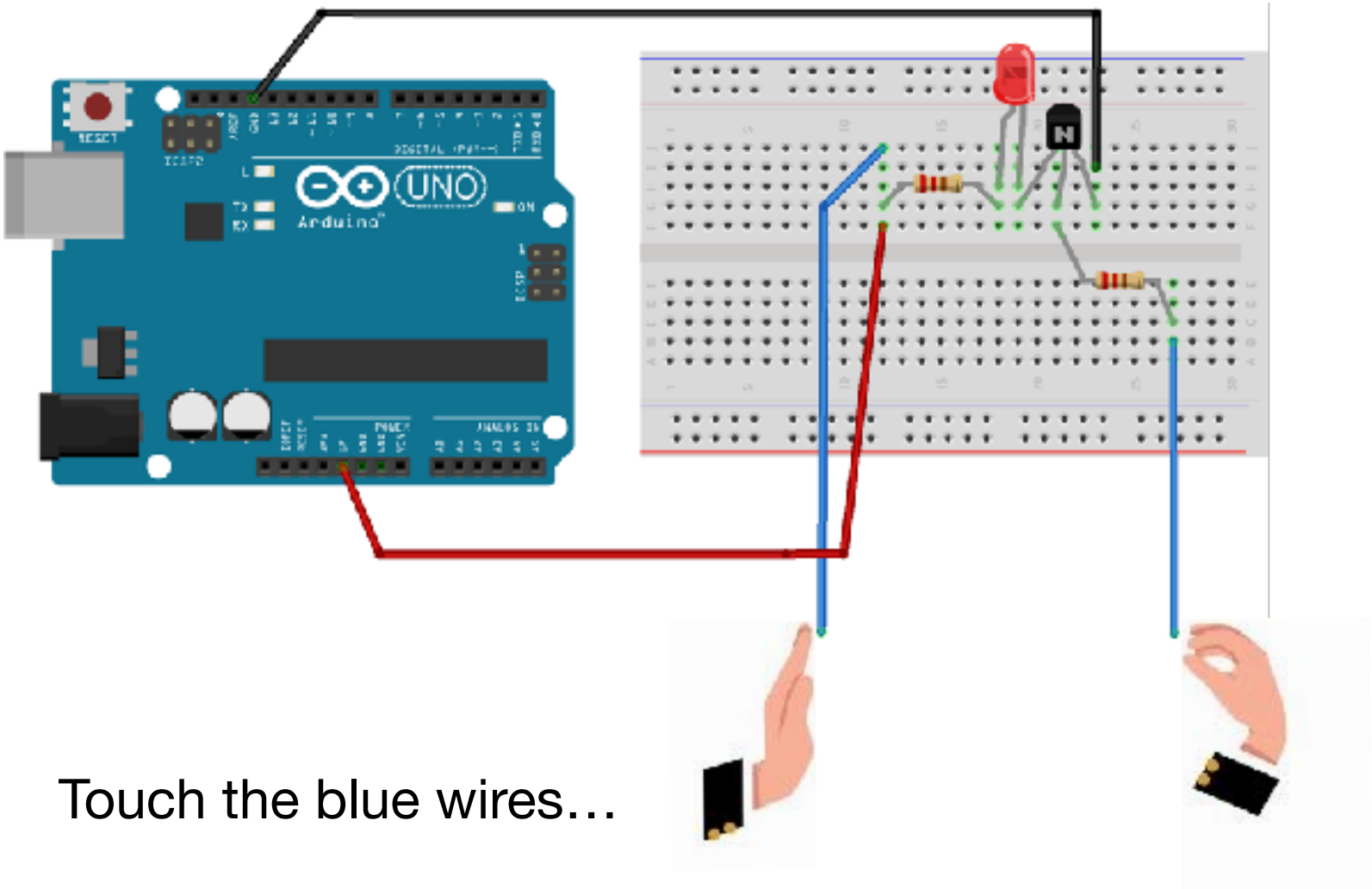

Touch the blue wires…

A slightly smarter experiment…

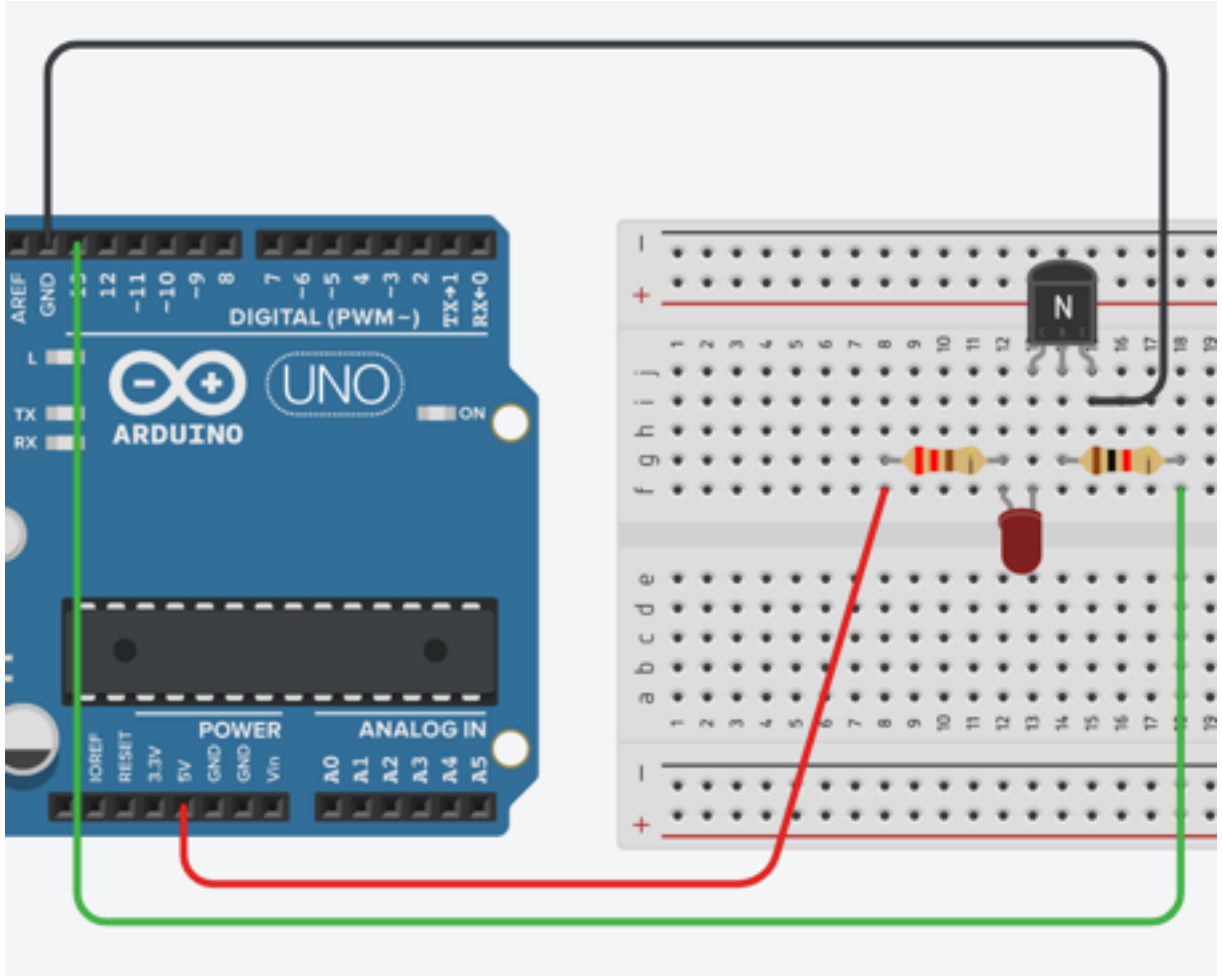

Link: https://www.tinkercad.com/things/d78g9hZ3kjn

Relays

Load side
NO
COM
NC
SRD-05VDC-SL-C
SRD-05VDC-SL-C
2 Relay Module
VCC
IN2
IN1
GND
Arduino side

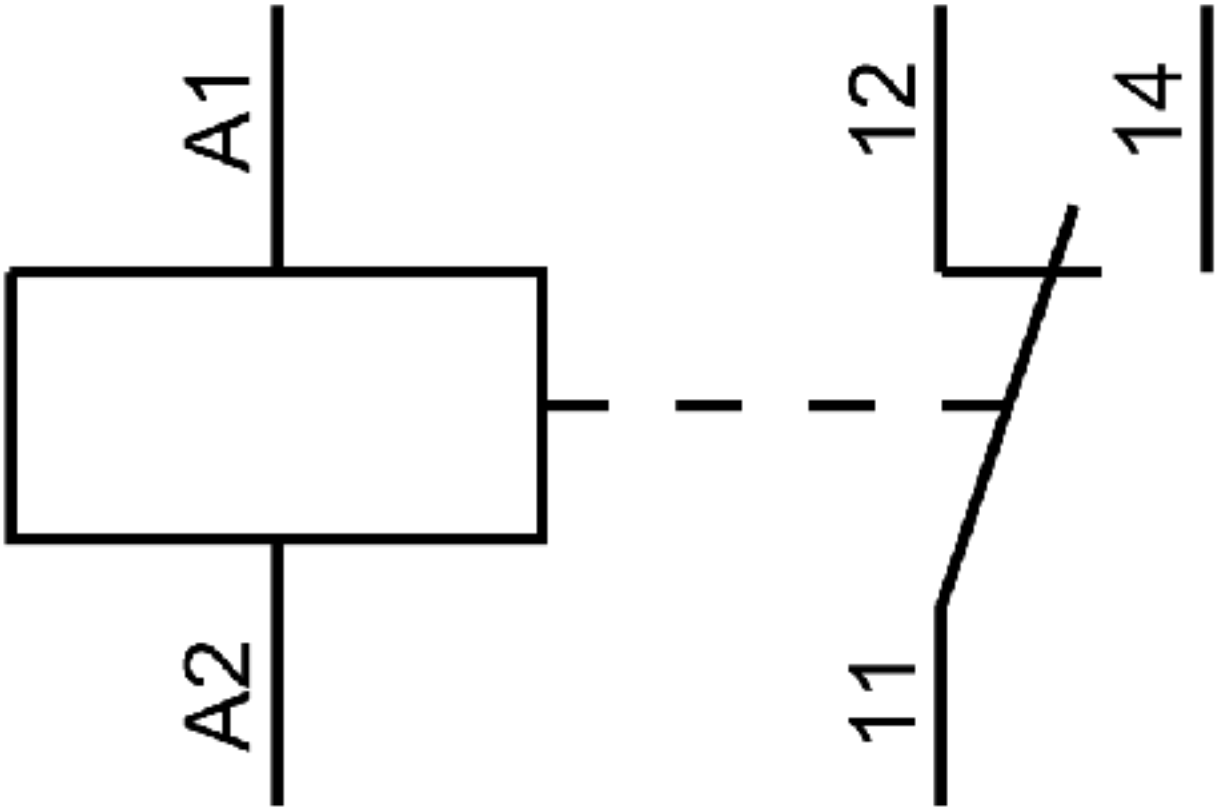
A2
A1
11
12
14

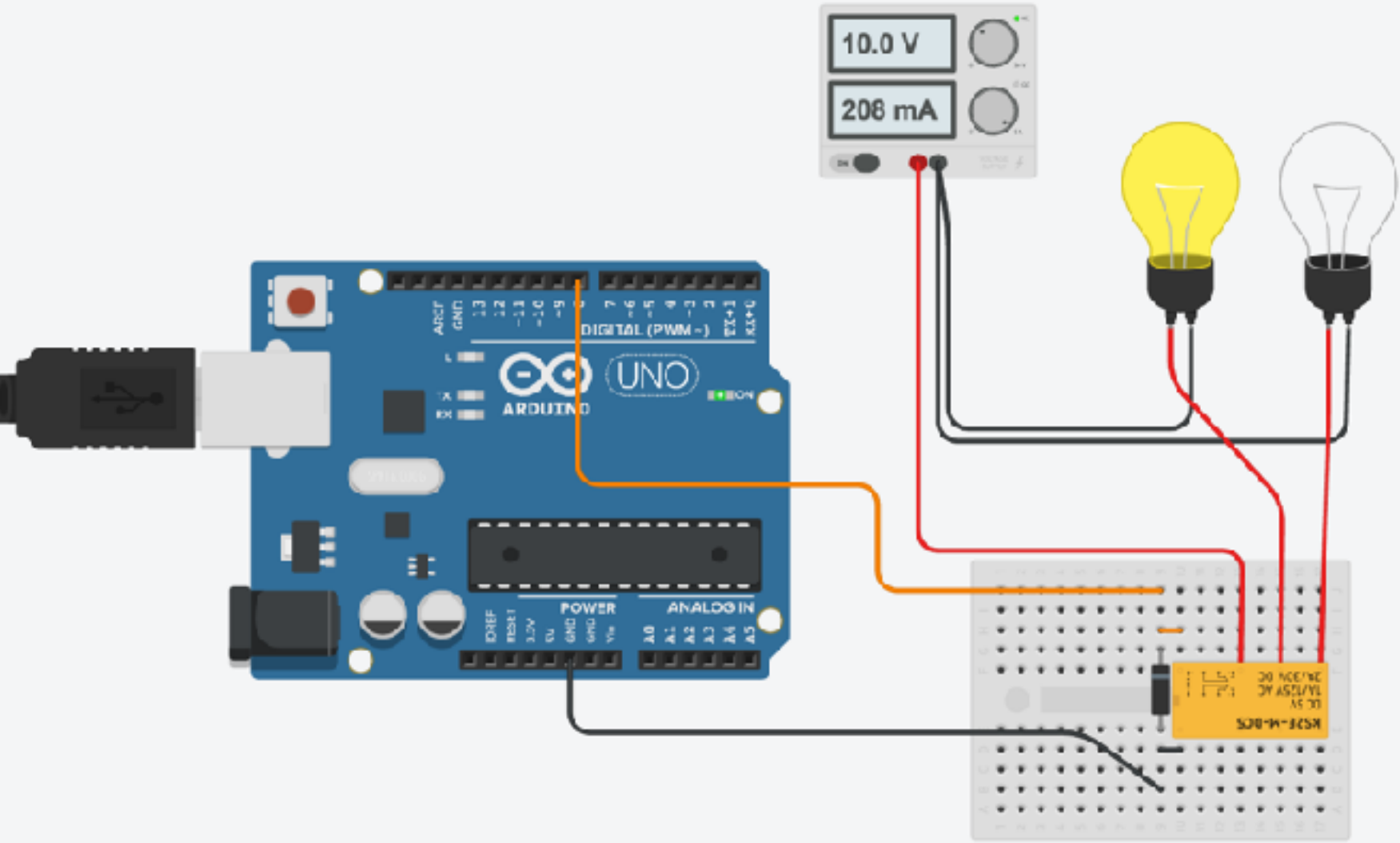
10.0 V
206 mA
DIGITAL (PWM~)
UNO
ARDUINO
POWER
ANALOG IN

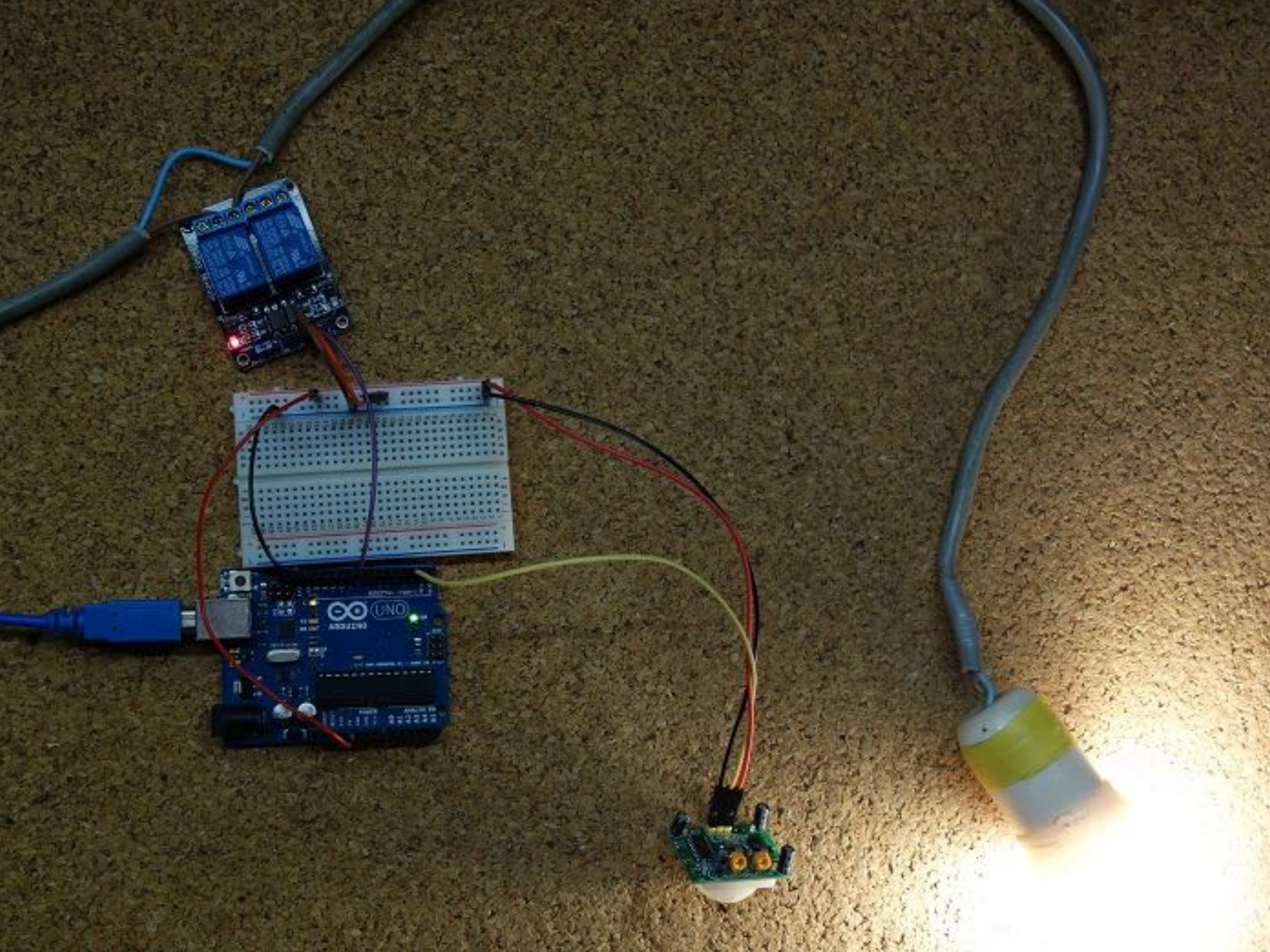
UNO
ARDUINO

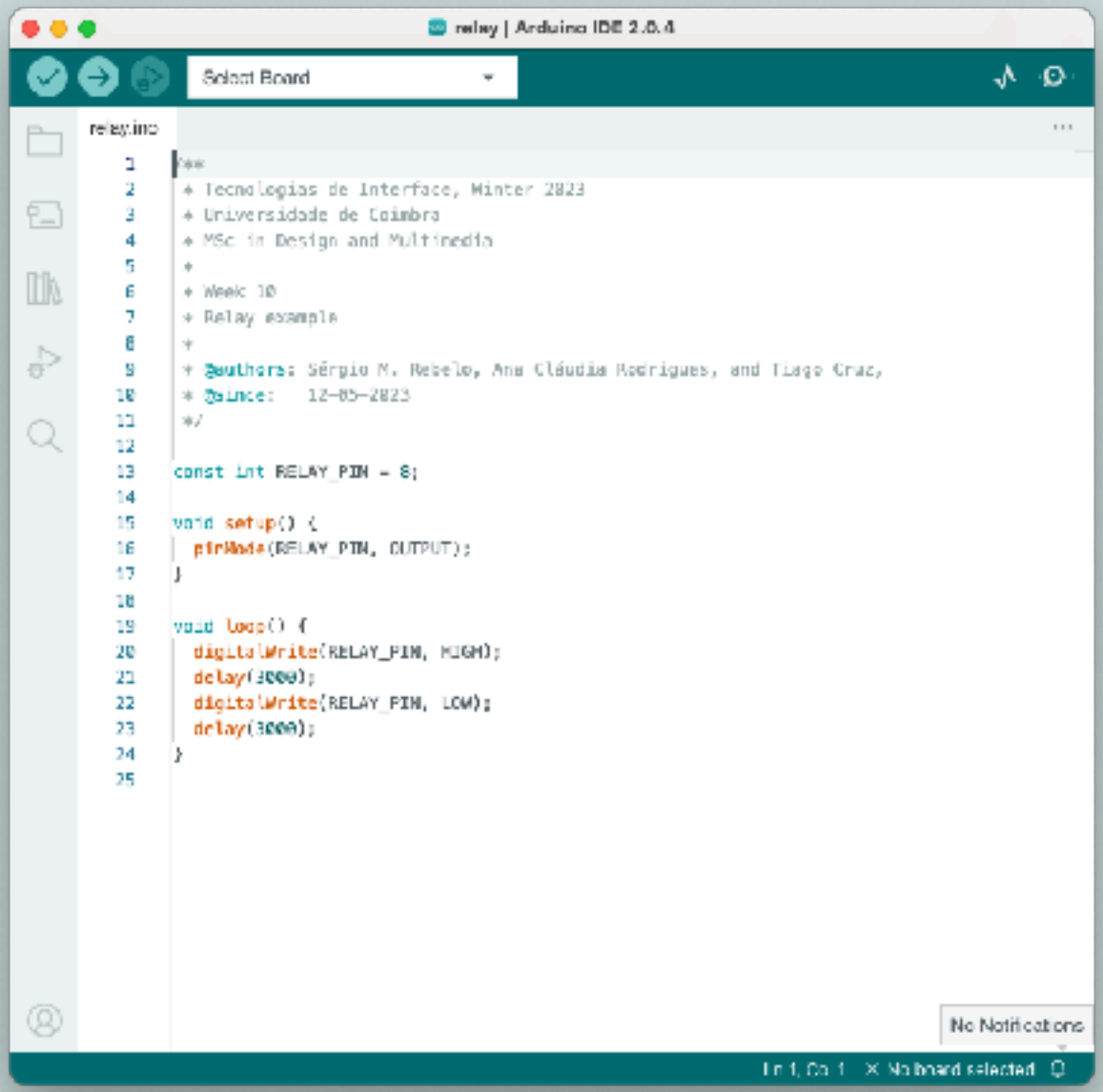

Code:https://github.com/sergiomrebelo/fctuc-mdm-ti/tree/main/PL10%E2%80%93misc/relay