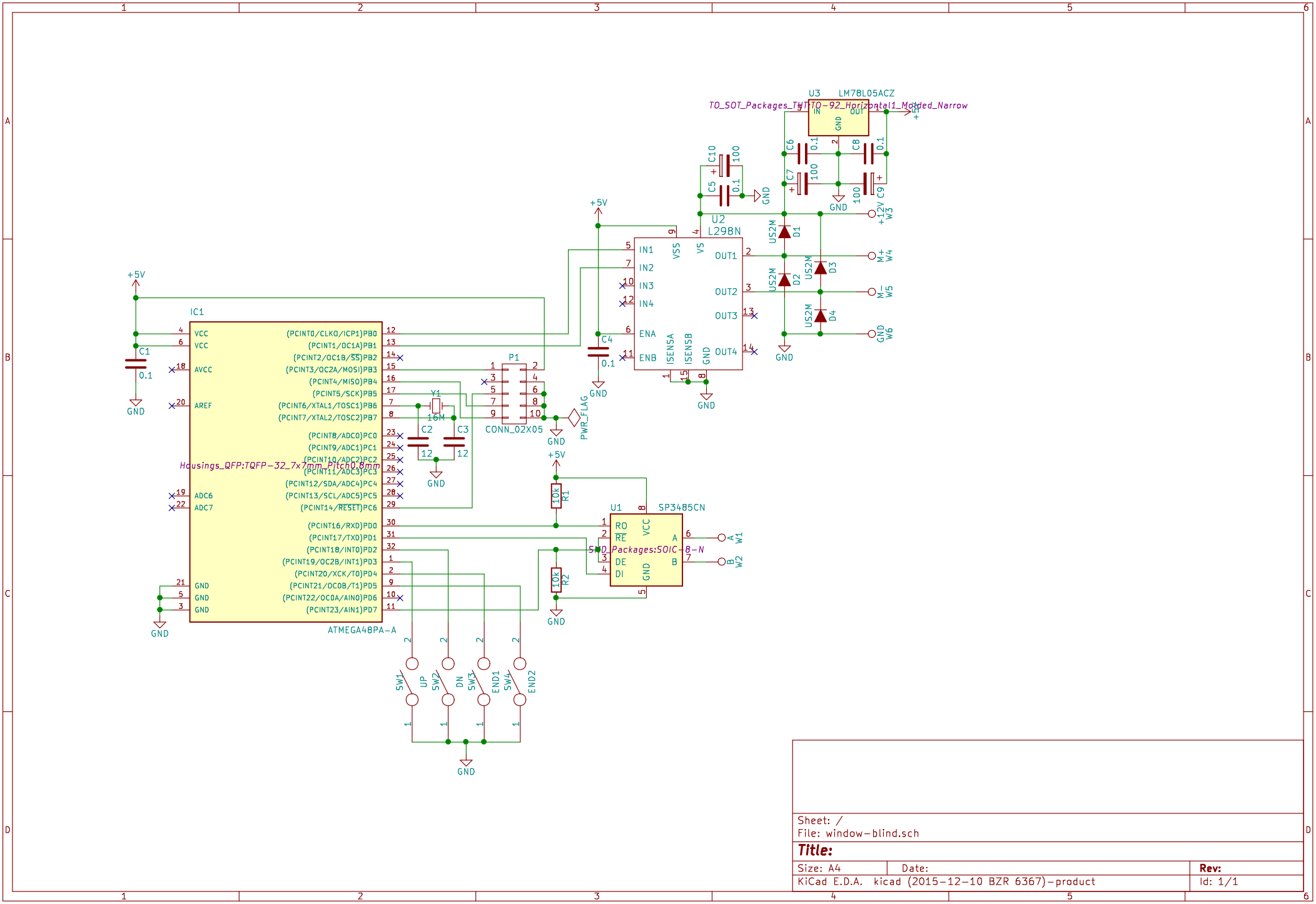

Sheet: /
File: window-blind.sch

Title:

Size: A4	Date:	Rev:
KiCad E.D.A. kicad (2015-12-10 BZR 6367)-product		Id: 1/1