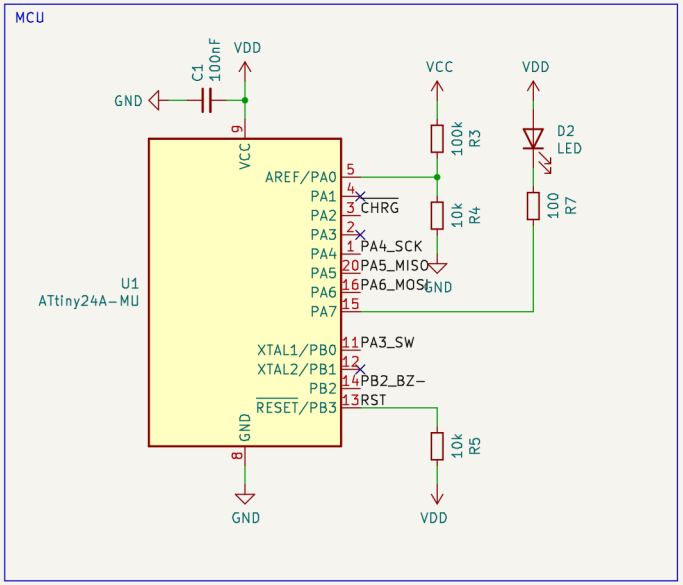

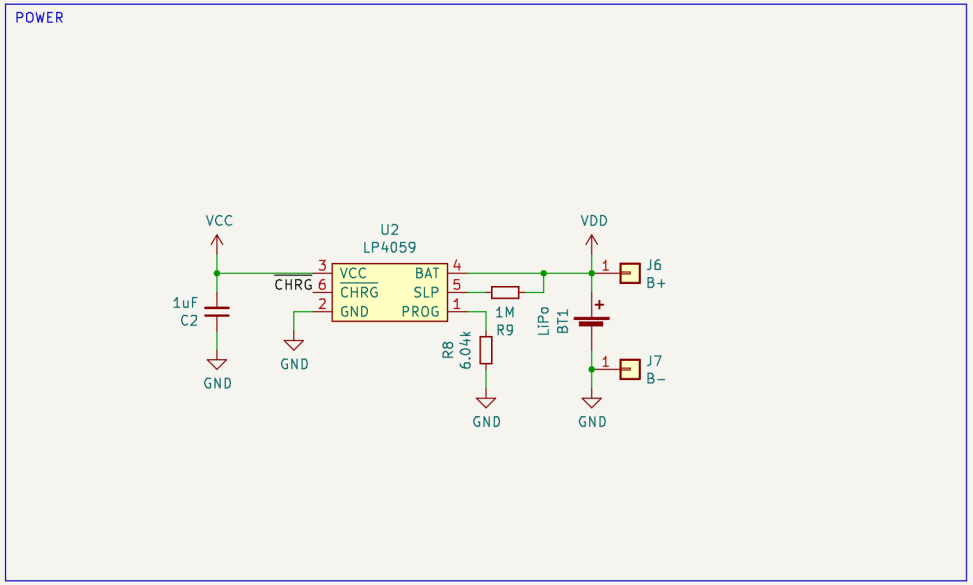

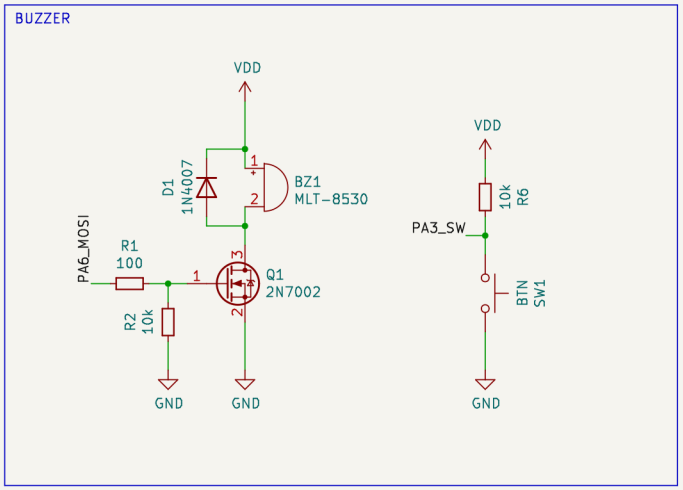

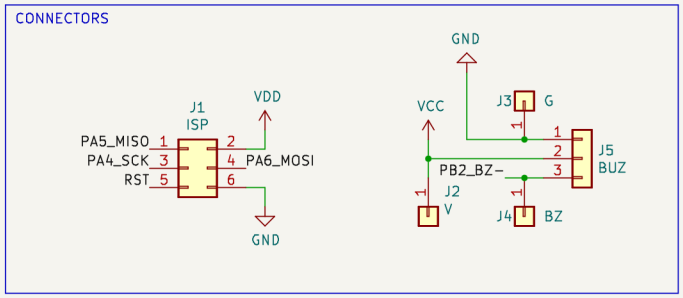

Sheet:
File: tiny-wasp.kicad_sch

Title:

Size: A4	Date:	Rev:
KiCad E.D.A. eeschema 7.0.1		Id: 1/1