USB C

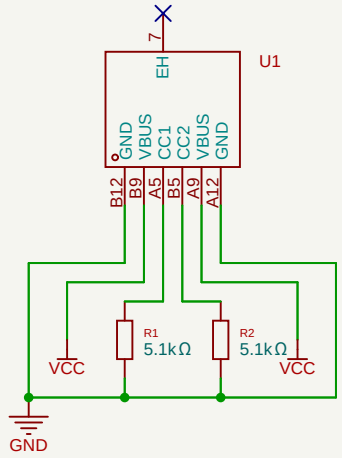

POWER SWITCH

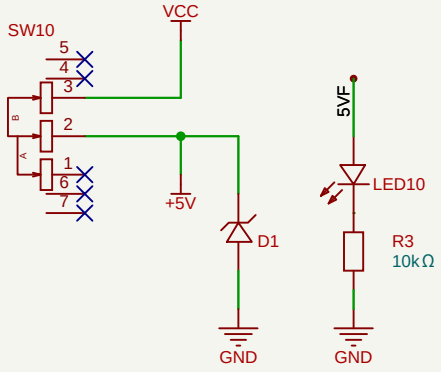

3.3V REGULATOR

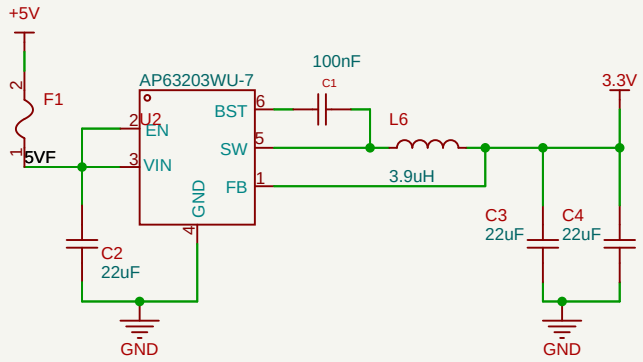

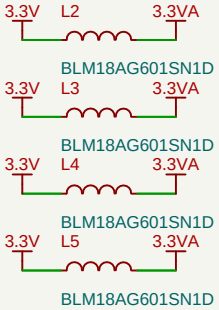

Schematic	Schematic1		Create at	2026-03-08
			Update at	2026-04-17
Board	Board1		Page	PWR
Drawn	-	cheap-board-max-10		
Reviewed	-			
Pocket Labs	Hour			
	09:28:49	Version	Size	Page 1 Total 6
	Tepic, Nayarit	V1.0	A4	Pocket Labs

MAX 10 FPGA

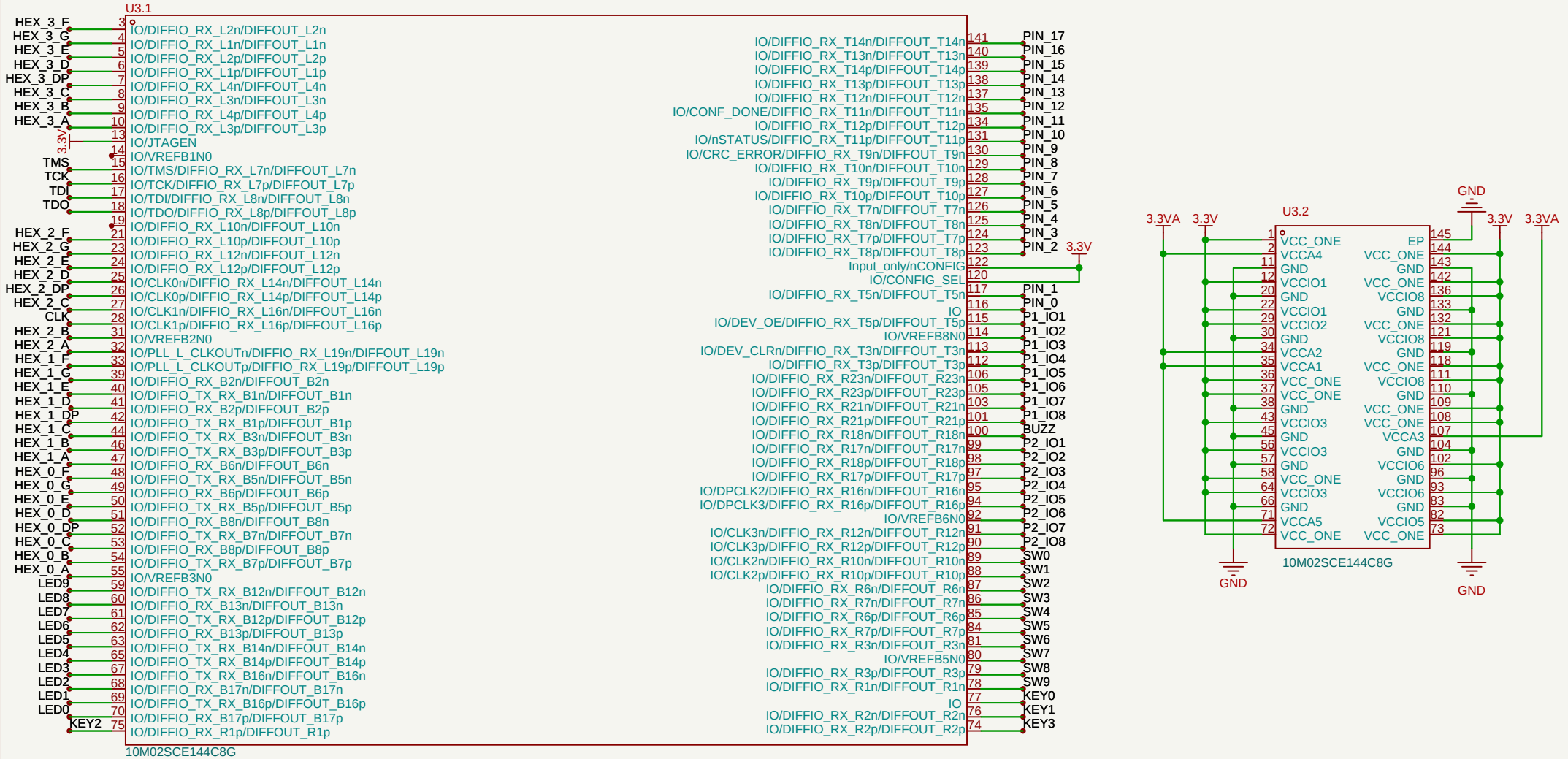

Schematic	Schematic1	Create at	2026-03-08
		Update at	2026-04-17
Board	Board1	Page	MAX 10
Drawn	-	cheap-board-max-10	
Reviewed	-		
Pocket Labs	Hour		
	09:28:40	Version	Size	Page 2 Total 6
	Tepic, Nayarit	V1.0	A4	Pocket Labs

DECOUPLING

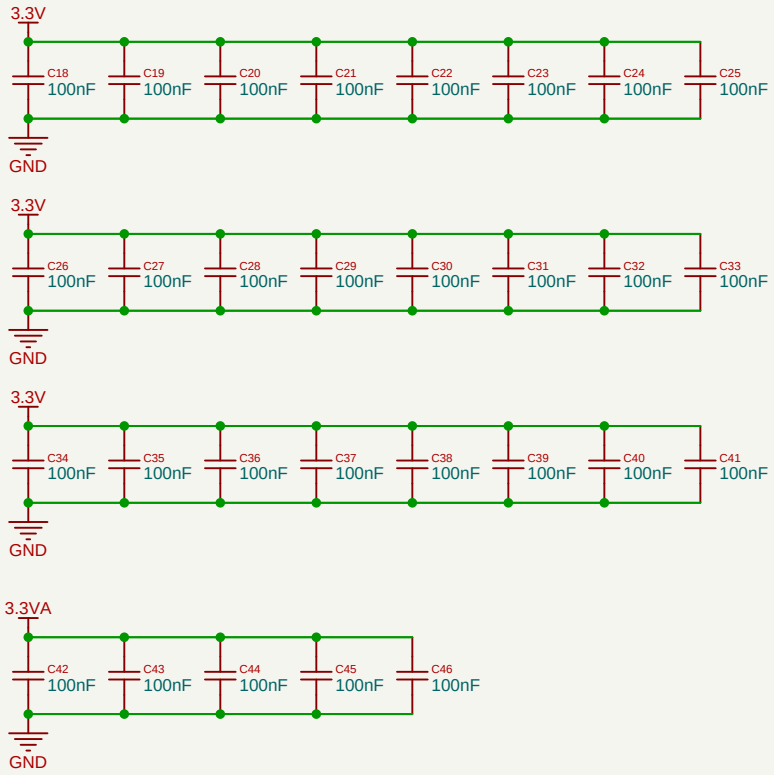

Schematic	Schematic1		Create at	2026-03-08
			Update at	2026-04-17
Board	Board1		Page	DEC
Drawn	-	cheap-board-max-10		
Reviewed	-			
Pocket Labs	Hour			
	09:28:40	Version	Size	Page 3 Total 6
	Tepic, Nayarit	V1.0	A4	Pocket Labs

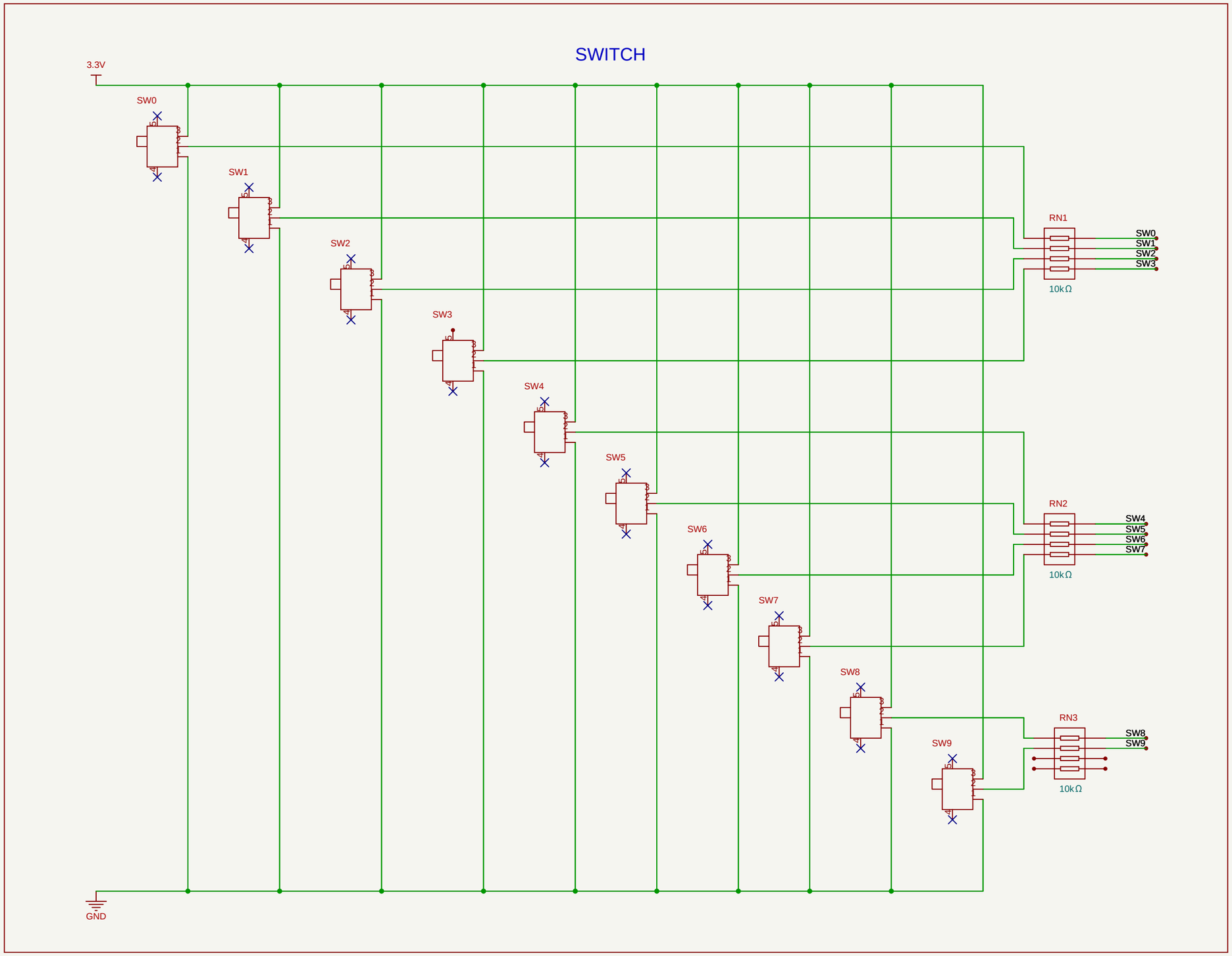

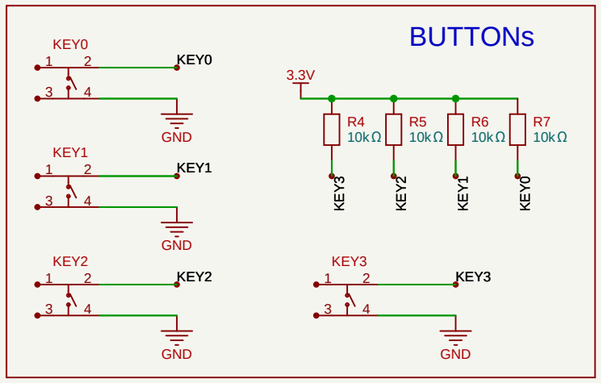

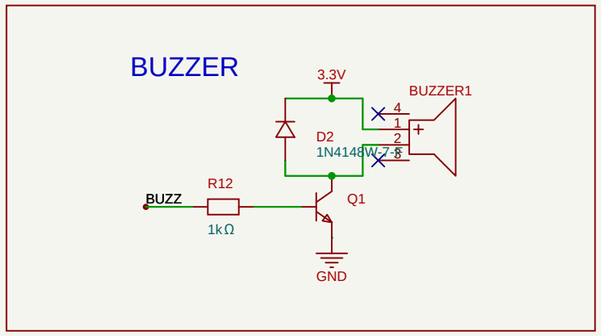

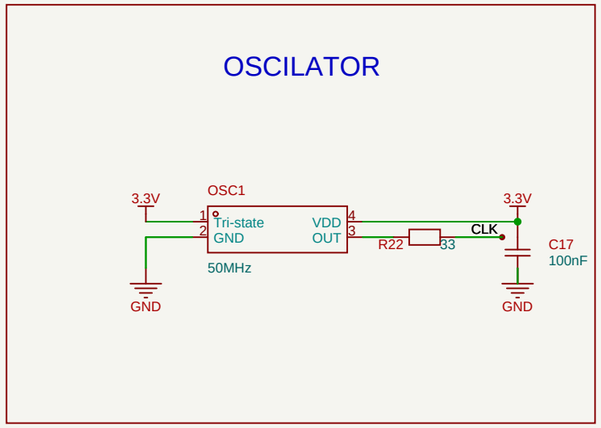

Schematic	Schematic1	Create at	2026-03-08
		Update at	2026-04-17
Board	Board1	Page	PERIPHERALS
Drawn		cheap-board-max-10	
Reviewed			
	Hour		
	09:28:41	Version	Size	Page 4 Total 6
Pocket Labs	Tepic, Nayarit	V1.0	A4	Pocket Labs

7 SEG DISPLAY

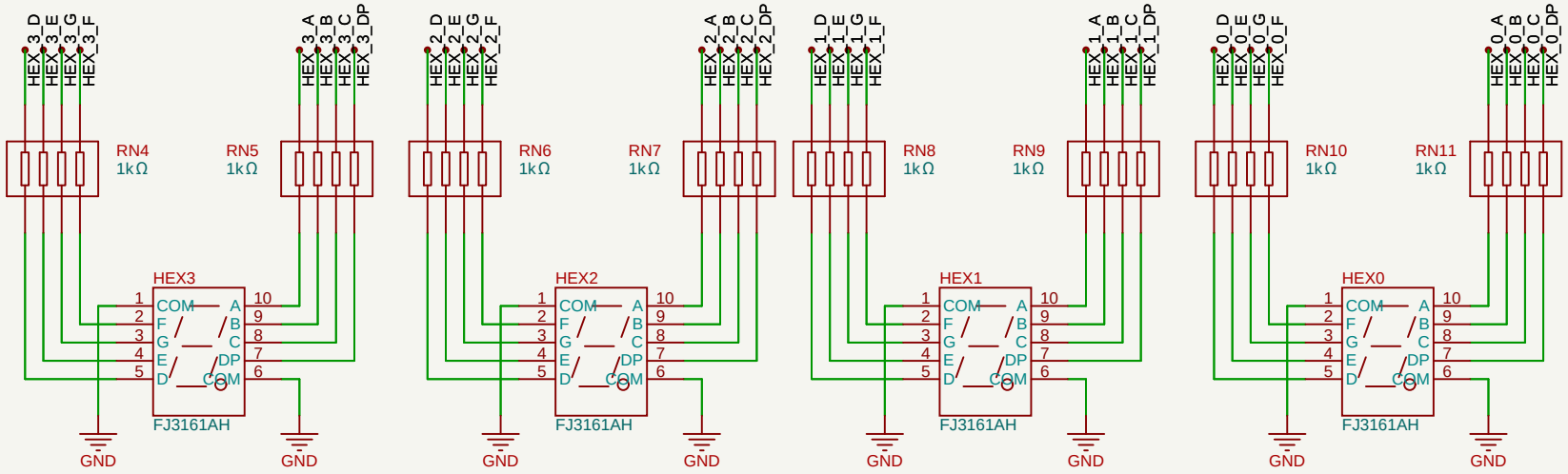

LEDs

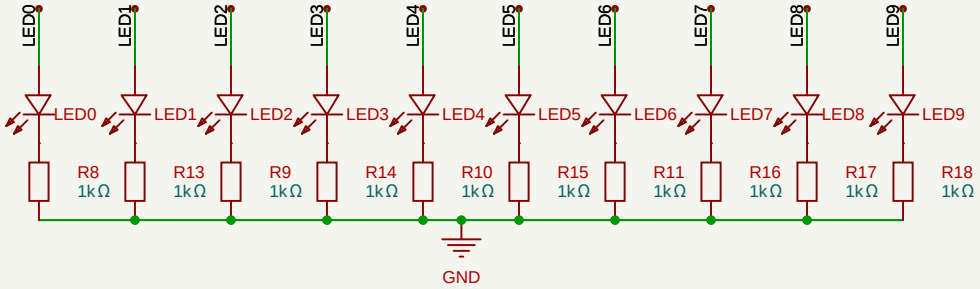

Schematic	Schematic1	Create at	2026-03-08
		Update at	2026-04-17
Board	Board1	Page	LEDs
Drawn	-	cheap-board-max-10	
Reviewed	-		
Pocket Labs	Hour		
	09:28:41	Version	Size	Page 5 Total 6
	Tepic, Nayarit	V1.0	A4	Pocket Labs

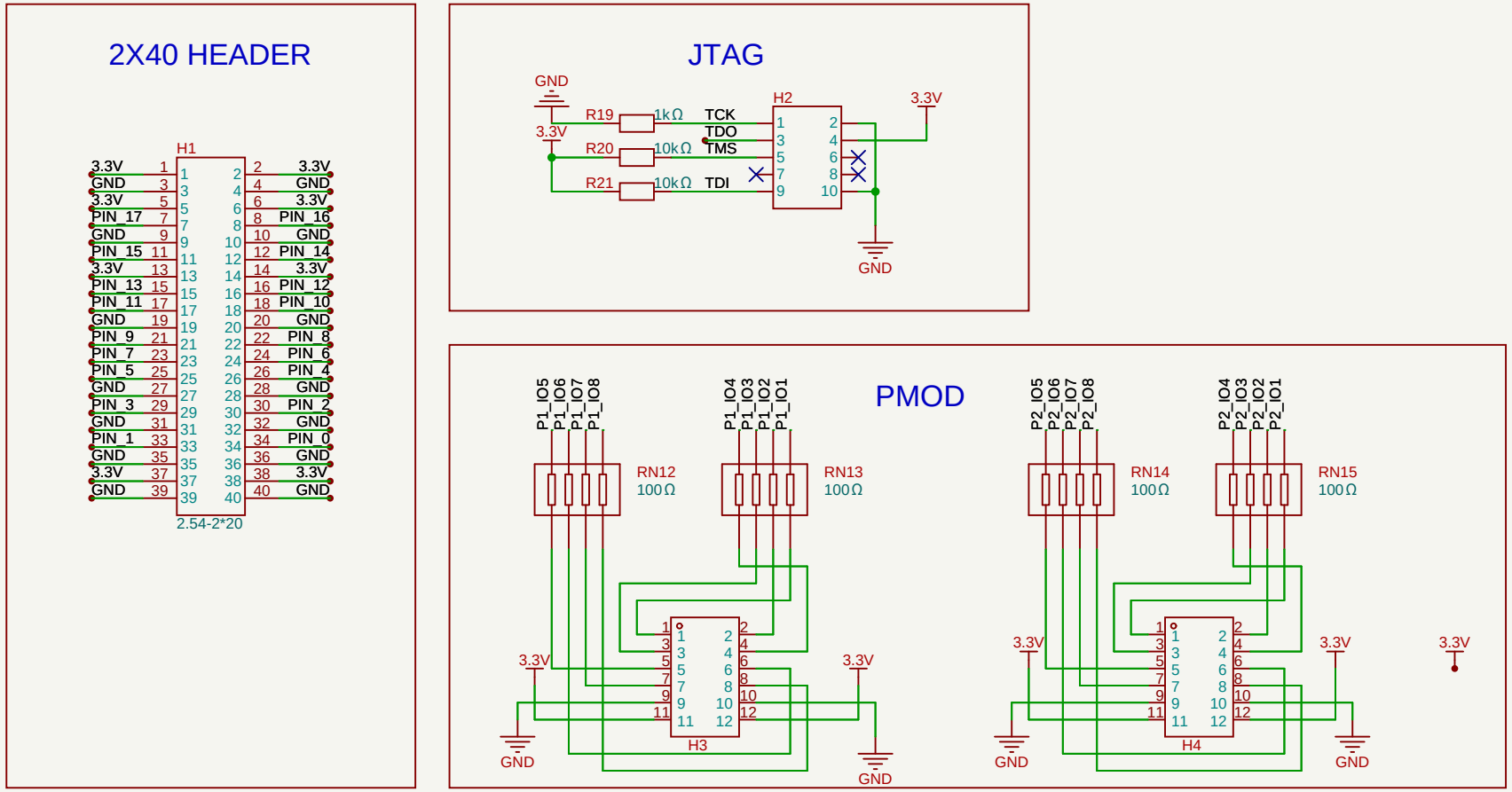

Schematic	Schematic1	Create at	2026-03-08
		Update at	2026-04-17
Board	Board1	Page	CONN
Drawn	-	cheap-board-max-10	
Reviewed	-		
Pocket Labs	Hour		
	09:28:41	Version	Size	Page 6 Total 6
	Tepic, Nayarit	V1.0	A4	Pocket Labs