Valid from serial number	T-code
713962-	403-414, 669-671, 716-718
Order number	**Date**
218920-040	2005-06-01

10- Electric pump motor –1710

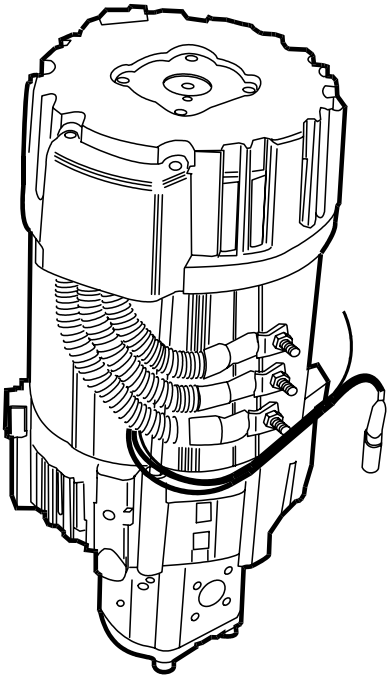

10.1 General

The pump motor is a three-phase AC motor. In the motor, there is a thermoelement measuring the motor temperature, as well as a bearing with an integrated measuring unit for measuring rotational speed and direction.

The pump motor is available in two sizes on the trucks.

On the B/E1—B/E6, P112—150 is used.

On the B/E7—B/E8, P112—195 is used.

This service manual includes instructions for replacing bearings, axle seals and the temperature sensor.

10.2 Dismantling the pump motor

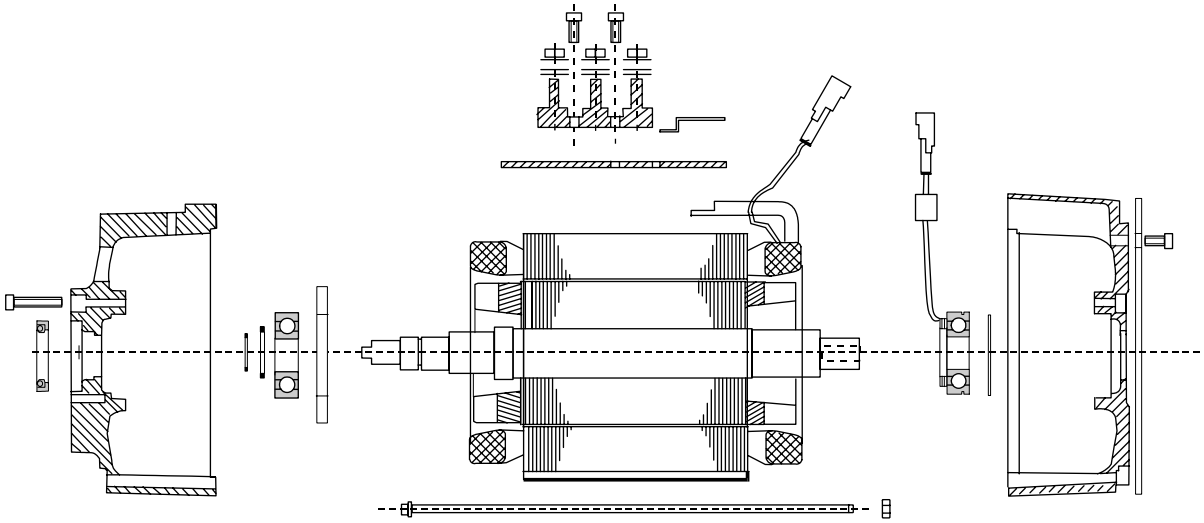

https://www.forkliftpdfmanuals.com/

10.3 Dismantling and assembling the pump motor

To open and close the motor compartment, see section P1 in this manual.

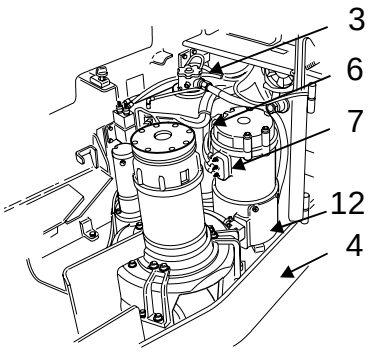

10.3.1 Dismantling

- Lower the forks to the lowest position to reduce pressure in the hoses and pump.
- Disconnect the battery plug.
- Pump the oil out of the hydraulic tank (3) with filter pump V10-15191.
- Remove the support (4) so that the bolts (5) for the pump mounting (12) are accessible.
- Remove the temperature/speed measuring contacts (6) and power cables (7) from the motor (8).
- Remove the hydraulic hose (9) and loosen the hose clamp for the hydraulic hose (10) which is attached to the tank.
- Fasten a lifting eye in the motor axle.
- Remove the bolts (5) holding the pump mounting (12) to the chassis.
- Lift out the hydraulic pump and place it on a clean surface.
- Remove both mounting attachments (12) from the pump motor (8).
- Remove the screws and dismount the pump (13).
- Remove the carrier.

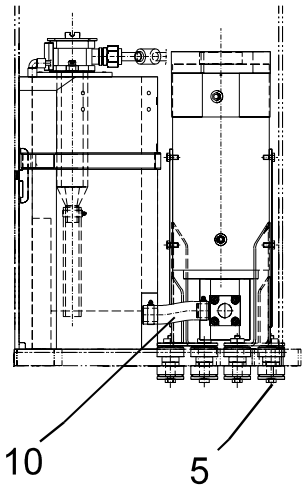

10.3.2 Assembling

- If the O-ring on the pump is damaged, it should be replaced.
- Replace the carrier between the pump and the pump motor (8).
- Replace the pump unit (13) on the pump motor (8).
- Replace both mounting (12) attachments on the pump motor (8).
- Screw a lifting eye into the end of the motor axle and connect it to an overhead crane.
- Lift the hydraulic pump into the truck while at the same time refitting the hydraulic hose (10) on the tank (3).
- Tighten the hose clamp.
- Fasten the two pump mountings (12) to the chassis using the bolts (5).
- Unscrew the lifting eye.
- Refit the hydraulic hose (9) and the temperature/speed metering contacts (6) and the power cables (7).
- Fill the hydraulic tank (3) with new oil.

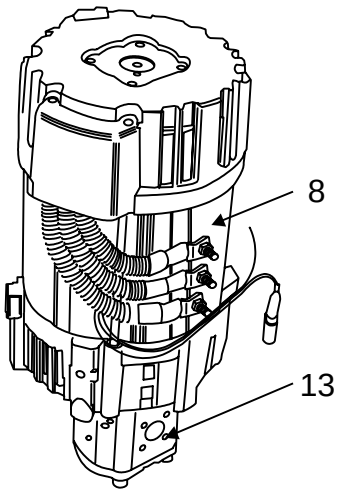

 © BT Europe AB

https://www.forkliftpdfmanuals.com/

Valid from serial number	**T-code**
713962-	403-414, 669-671, 716-718
Order number	**Date**
218920-040	2005-06-01

10.4 Bearing replacement

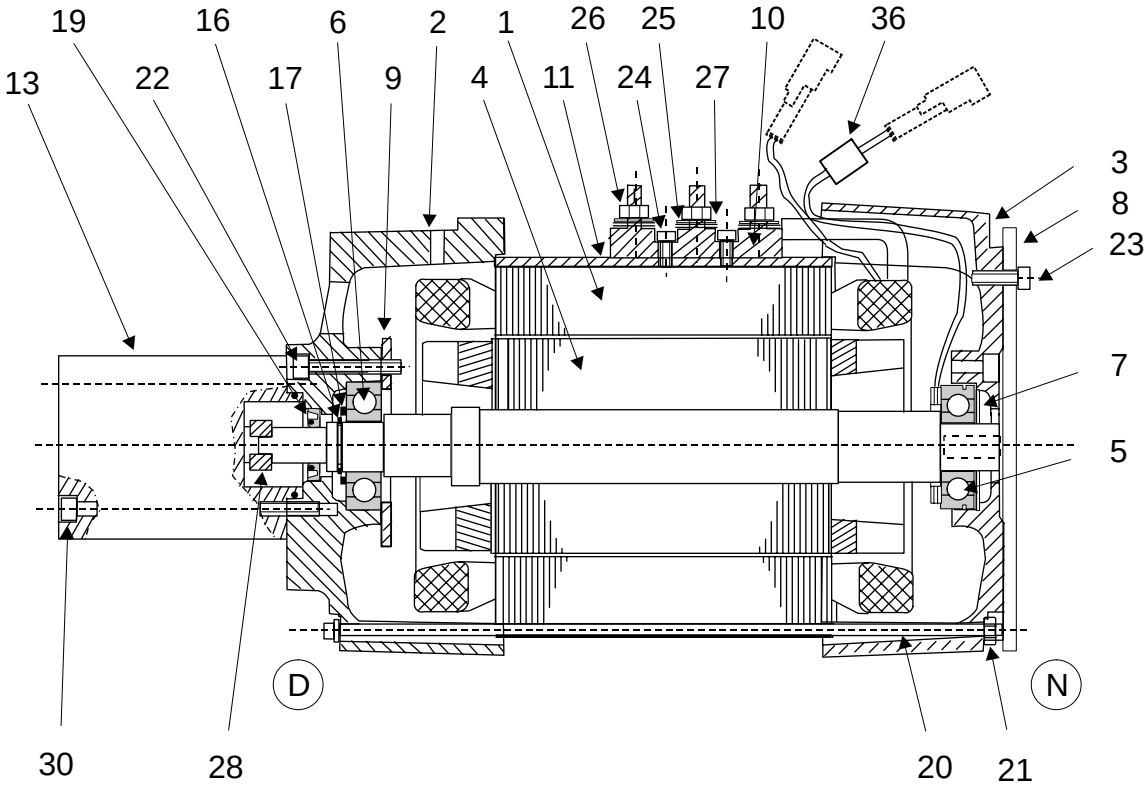

10.4.1 Dismantling

Motors without pumps.

- Loosen the screws (23) and remove the protective plate (8).
- Loosen the stud screws (20) using tool 08-15444.
- Remove the shield (3) and washer (7).

If both bearings are to be replaced follow the points below. When only replacing the pulse sensor bearing continue with **A**.

- Remove the screws (22).
- Lift the rotor (4) out of the stator (1).
- Dismount the shield (2) radial seal (19).
- Remove the circlip (16) and support ring (17).
- Pull off the bearing with a puller.

A)

- Pull off bearing (5) with a puller.

https://www.forkliftpdfmanuals.com/

10.4.2 Assembling

Ensure all parts are intact and clean before assembly.

Follow all instructions if both bearings have been replaced

- Place the bearing cap (9) on the rotor axle's D-side.
- Press the bearing (6) on the rotor axle.
- Press the bearing (5) on the rotor axle's N-side.
- Mount the support ring (17) and circlip (16) on the axle's D-side.
- Fit the gasket (19) with the assembly device.

NOTE

Always use a new gasket when fitting the rotor axle.

- Install the rotor in the end shield (2).
- Tighten the bearing cap (9) using the screws (22) to a torque of 6 Nm.
- Fit the rotor (4) in the stator (1).
- Put the washer (7) on the bearing (5).

Ensure that the terminal block assembly 11 is in position

- Install the end shield (3).
- Tighten the stud screws (20) and nuts (21) to a torque of 5 Nm.
- Fit the ferrite block on the sensor cable.
- Fit the protective plate (8) on the N-side.
- Secure the cables from the thermocontact and the sensor bearing to one of the power cables.

If only the pulse sensor bearing is replaced:

- Press the bearing (5) on the rotor axle's N-side.
- Put the washer (7) on the bearing (5).

Ensure that the terminal block assembly 11 is in position

- Install the end shield (3).
- Tighten the stud screws (20) and nuts (21). With a torque wrench, tighten the nuts to 5 Nm.
- Fit the ferrite block on the sensor cable.
- Fit the protective plate (8) on the N-side.
- Secure the cables from the thermocontact and the sensor bearing to one of the power cables.

 © BT Europe AB

https://www.forkliftpdfmanuals.com/

Valid from serial number	**T-code**
713962-	403-414, 669-671, 716-718
Order number	**Date**
218920-040	2005-06-01

10.5 Installation instructions for external temperature sensor

Number 170384

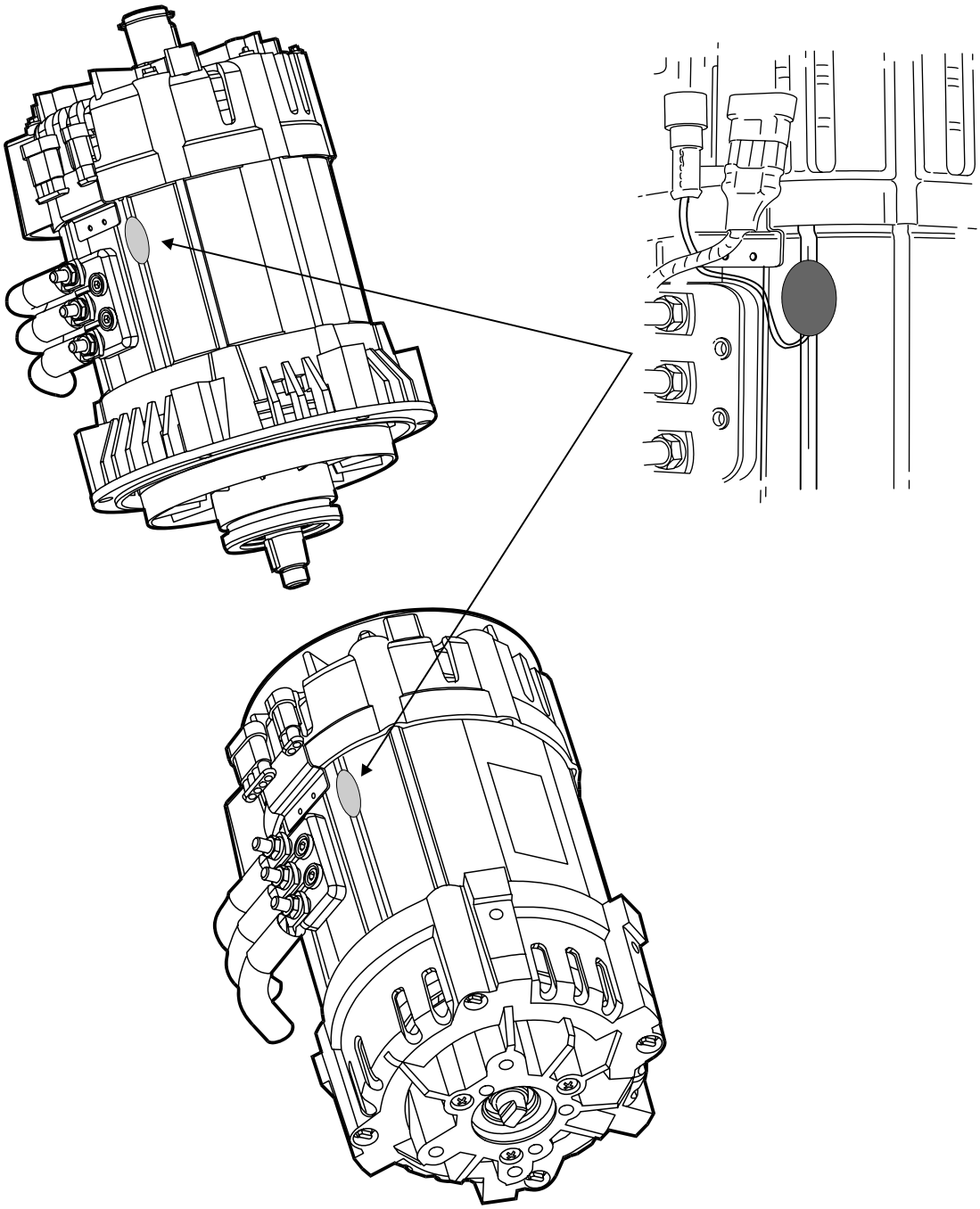

https://www.forkliftpdfmanuals.com/

Electric pump motor –1710

Installation instructions for external temperature sensor

T-code	Valid from serial number
403-414, 669-671, 716-718	713962-
Date	**Order number**
2005-06-01	218920-040

A fully functional temperature sensor mounted inside the motor should have a resistance value of approx. 550 ohm at a temperature of 20 degrees.

The temperature sensor mounted on the outside has a resistance value of approx. 670 ohm at a temperature of 20 degrees.

- The temperature sensor can be mounted to the right or left of the terminal block, depending on which side is easiest to access.
- Scrape the surface clean where the new temperature sensor is to be mounted.
- Place the temperature sensor as shown in the picture.

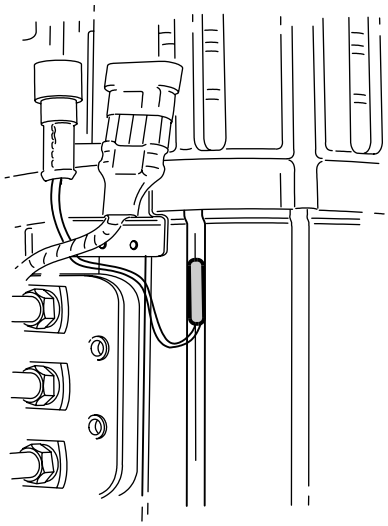

- Apply metallic lacquer over the sensor. Ensure that the entire sensor is covered by the metallic lacquer.

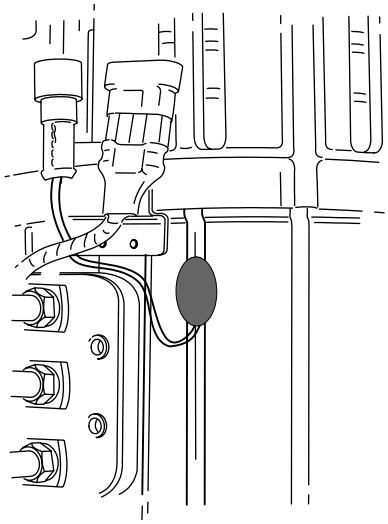

© BT Europe AB
https://www.forkliftpdfmanuals.com/

- Fasten the metallic lacquer and the sensor with masking tape and allow it to harden.

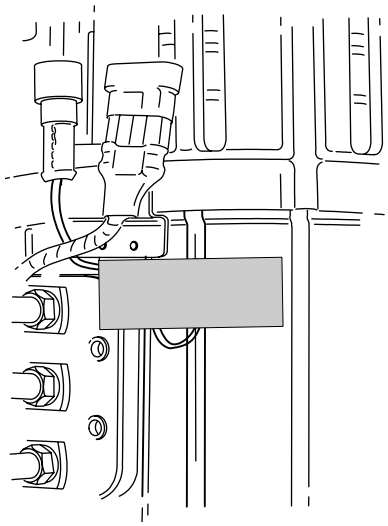

- Remove the masking tape. The temperature sensor should now be fixed in place and covered entirely by metallic lacquer.
- Remove the ferrite block from the old sensor and mount it on the cable to the new sensor.
- Remove the contact from the broken sensor, which is attached to the motor.
- Place the new sensor contact in the old bracket and connect it to the cables.
- Fasten the old contact and its cables using a cable tie so it cannot damage anything.

https://www.forkliftpdfmanuals.com/

Electric pump motor –1710

Installation instructions for external temperature sensor

T-code	Valid from serial number
403-414, 669-671, 716-718	713962-
Date	**Order number**
2005-06-01	218920-040

This page is intentionally left blank

© BT Europe AB
https://www.forkliftpdfmanuals.com/

Valid from serial number	T-code
713962-	403-414, 669-671, 716-718
Order number	**Date**
218920-040	2005-06-01

11- Electric steering motor – 1730

11.1 General

The steering motor is located on the drive assembly cowling. It receives signals from the steering generator located in the drive panel. The steering motor is equipped with a gear working directly upon the gear ring on the drive axle. It is also equipped with two carbon brushes.

11.2 Replacing the steering motor

To open and close the motor compartment, see section P1 in this manual.

11.2.1 Dismantling

- Switch off the truck by press the **0** key on the keypad.
- Disconnect the steering motor electrical contact from the tank console.
- Unscrew the screws holding the gear wheel.
- Lift away the steering motor.
- Unscrew the screws holding the gear wheel.
- Pull off the gear with a gear puller.

11.2.2 Assembling

- Replace the O-rings if required.
- Tap the gear wheel onto the steering motor.
- Apply Loctite 243 on the thread.
- Tighten the nut to a torque of 180 Nm.
- Close up the nut in the axle.
- Install the steering motor in the truck.
- Tighten the steering motor to a torque of 40 Nm.
- Connect the connector.

https://www.forkliftpdfmanuals.com/

T-code	**Valid from serial number**
403-414, 669-671, 716-718	713962-
Date	**Order number**
2005-06-01	218920-040

11.3 Dismantling and assembling the carbon brushes

- Unscrew the two plastic plugs on the upper surface of the steering motor.
- Take out the carbon and examine for wear.
- Replace the carbon if necessary.
- Insert the carbon and screw in the plastic plugs.

 © BT Europe AB
https://www.forkliftpdfmanuals.com/

Valid from serial number	T-code
713962-	403-414, 669-671, 716-718
Order number	**Date**
218920-040	2005-06-01

12- Electric drive motor – 1760

12.1 General

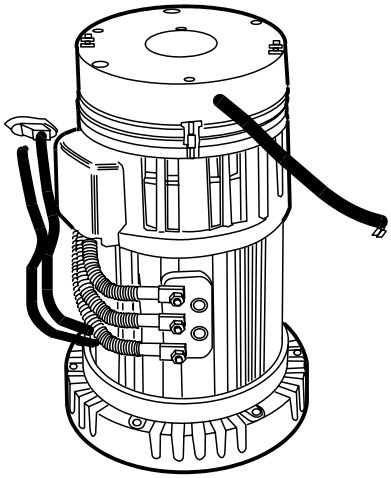

The drive motor is a three-phase AC motor. In the motor, there is a thermoelement measuring the motor temperature, as well as a bearing with an integrated sensor for measuring rotational speed and direction.

The drive motor is available in two sizes on the truck.

On the B/E 1–3, model D112–130 is used.
On the B/E 4–8, model D112–165 is used.

This service manual includes instructions for replacing bearings, axle seals and the temperature sensor.

12.2 Dismantling the drive motor

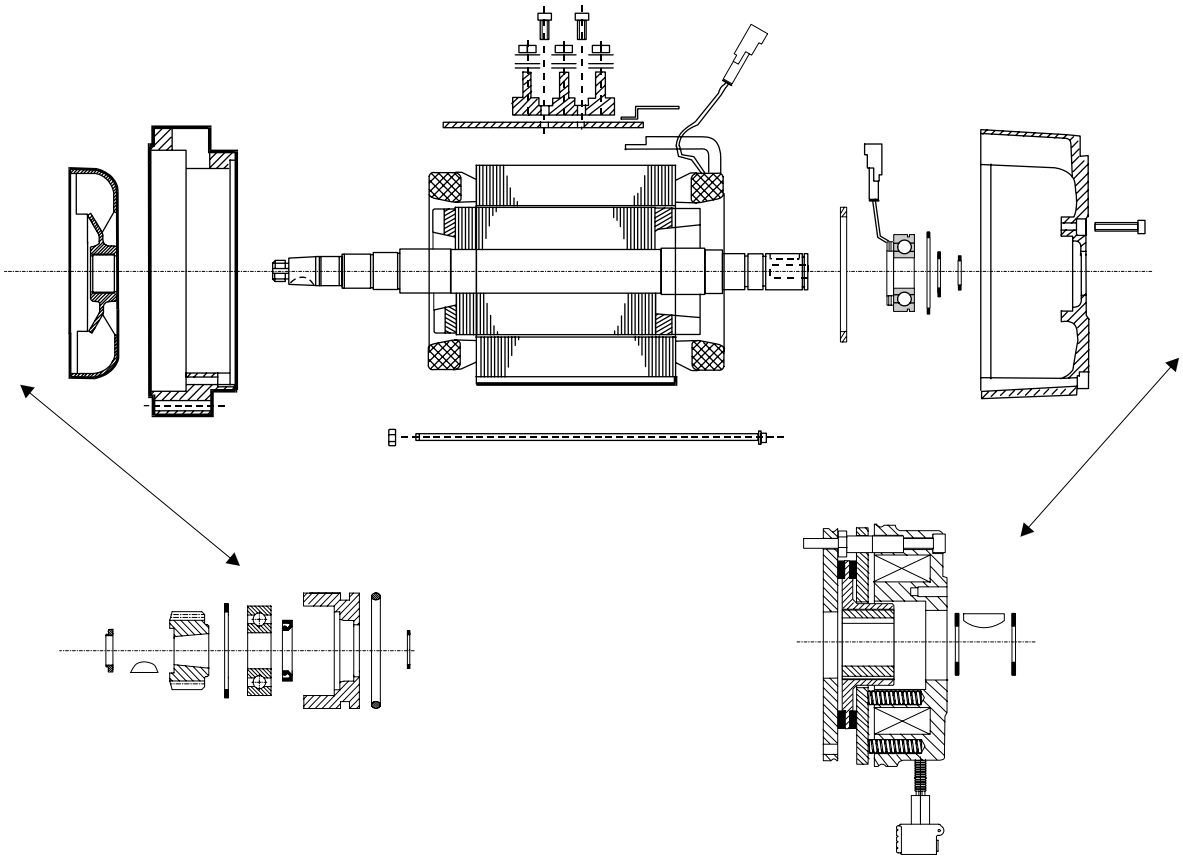

https://www.forkliftpdfmanuals.com/

12.3 Dismantling and assembling the drive motor

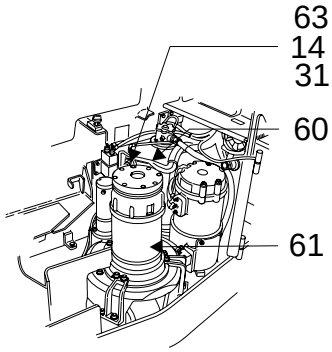

To open and close the motor compartment, see section P1 in this manual.

12.3.1 Dismantling the drive motor

- Cut the power by turning off the key and removing the battery plug.
- Remove the temperature, braking and speed measurement contacts (14, 31, 63) and power cables (60) from the motor (61).
- Fasten a lifting eye to the motor axle.
- Loosen and remove the motor mounting bolts (62).
- Lift out the motor using an overhead crane and place it on a clean surface.

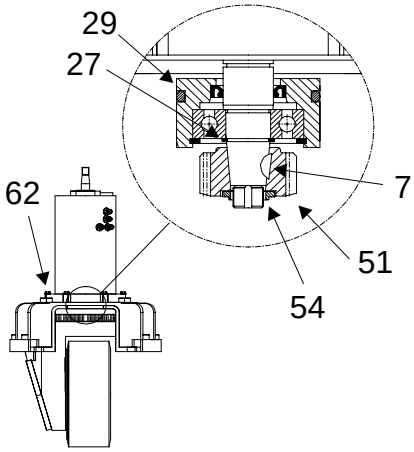

NOTE:

Risk of damage to the gear wheel (51).
The gear wheel on the end of the motor is easily damaged.
Lift out the motor with care.

- Cover the hole to the transmission when the motor is removed to prevent anything from falling inside the transmission housing.

Removing the gear wheel

- Tap loose the nut (54) and unscrew it using tool 10-15639.
- Pull off the gear wheel (51) using a gear puller.
- Remove the key (7) holding the gear wheel (51) in place.
- Remove the circlip (27) holding the bearing bracket (29) in place.
- Pull off the bearing bracket (29) using a gear puller.

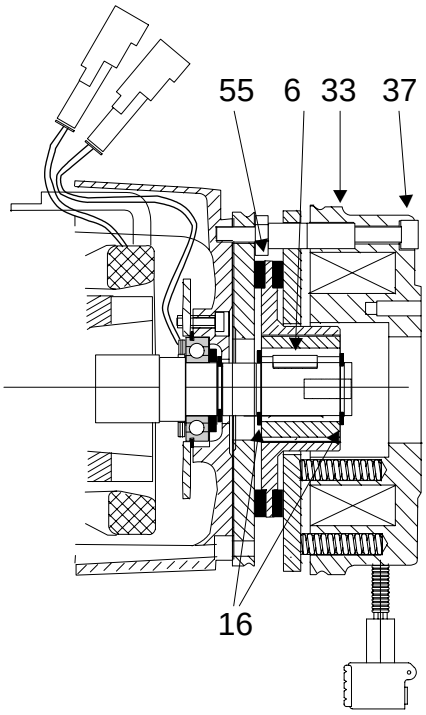

Removing the brakes

- Loosen the screws (37) so that the brakes (33) can be removed.
- Remove the outer circlip (16) from the motor axle.
- Remove the brake hub, key (6), plate and inner circlip (16).

© BT Europe AB
https://www.forkliftpdfmanuals.com/

12.3.2 Assembling the drive motor

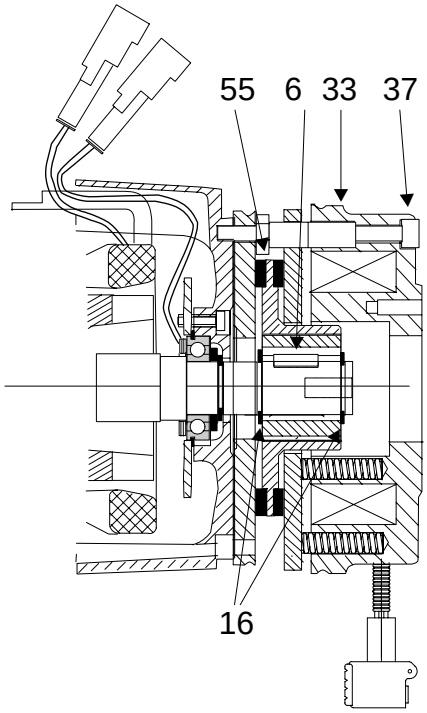

Assembling the brakes

- Refit the inner circlip (16) and key (6).
- Check that the friction disc (55) is centred in relation to the magnet housing before you try to install the brakes It may be necessary to charge the magnet coils with 48 V DC to position the brake disc.
- Fit the brake assembly onto the motor. Check that the splines on the friction disc were not damaged during installation.
- Tighten the mounting screws (38) for the brake assembly.
- Refit the outer circlip (16).

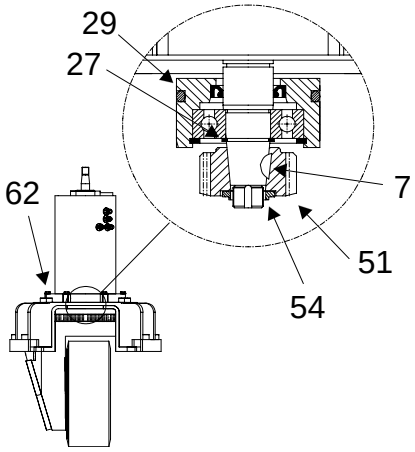

Assembling the gear wheel

- Refit the bearing cage (29) on the motor axle.
- Fit the circlip (27).
- Fit the key (7).
- Fit the gear wheel (51).
- Fit a new nut (54).
- Use tool 10-15639 and tighten to a torque of 60 Nm.
- Lock the nut with a centre punch in the key track.
- Attach a lifting eye to the motor axle and lift the motor axle into the transmission using an overhead crane.

NOTE:

Risk of damage to the gear wheel (51).
The gear wheel on the end of the motor is easily damaged.
Lift the motor in carefully.

- Tighten the motor (61) into the transmission to a torque of 20 Nm.
- Reconnect the temperature, braking, and the speed measurement contacts (14, 31) and power cables (60) to the motor.
- Remove the lifting eye bolt.
- For brake adjustment, see C-code 3100.

https://www.forkliftpdfmanuals.com/

12.4 Bearing replacement

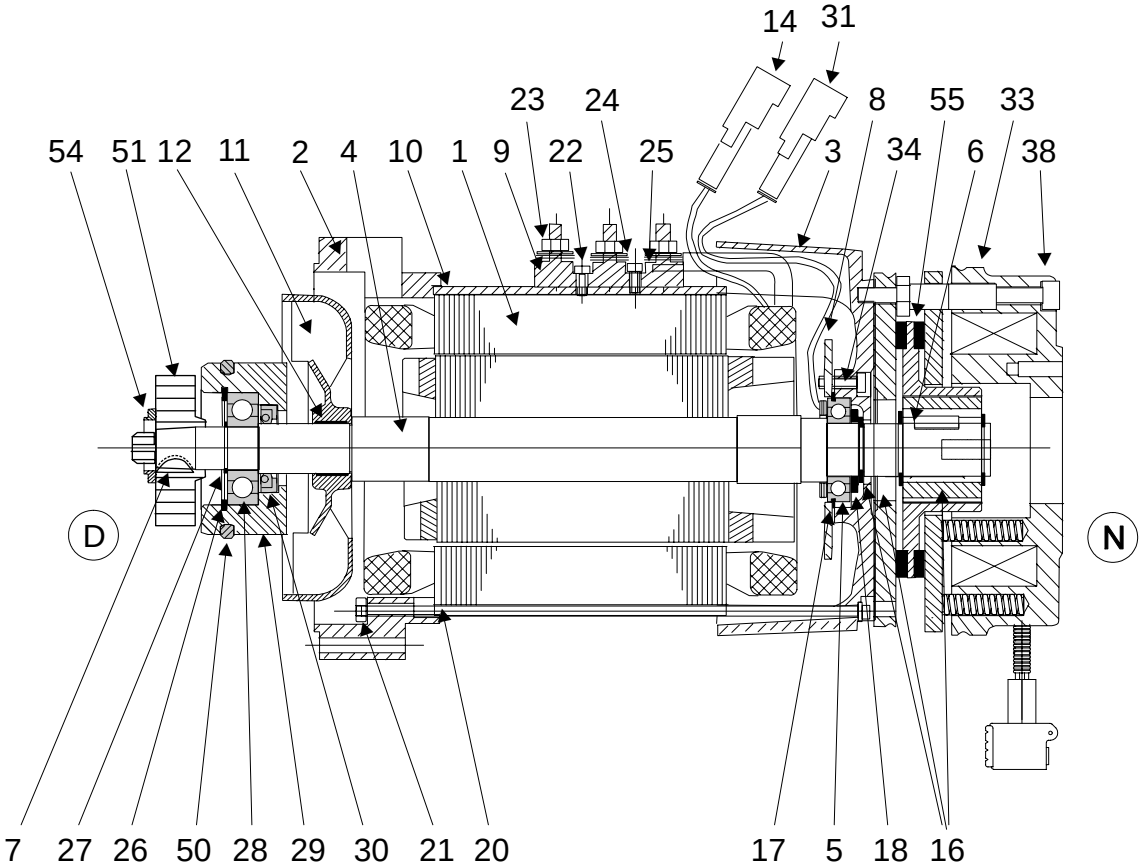

12.4.1 Dismantling

12.4.2 N-side

- Loosen the stud screws (20) using tool 08-15444.
- Remove the screws (34).
- Remove the shield (3).
- Remove the circlip (16) and support ring (18).
- Pull off the bearing (5) with a gear puller.

D-side

- Remove the circlip (26) from the bearing housing.
- Pull off the bearing housing (29) with a gear puller.
- Pull the bearing (28) off from the bearing housing with a Kukko ball bearing puller.
- Remove the seal (30) if it leaks.

 © BT Europe AB

https://www.forkliftpdfmanuals.com/

12.4.3 Assembling

Ensure all parts are intact and clean before re-assembly.

N-side

- Press the bearing (5) on the rotor axle.
- Replace the bearing cap (8) on the motor axle.
- Install the flange ring (17).
- Refit the washer (18) and circlip (16).
- Screw the bearing cap (8) and shield (3) together using the screws (34) to a torque of 6 Nm.
- Fit the insulation hose on the sensor bearing cable.
- Place the terminal block (10) between the shields.
- Tighten the stud bolts (20) to a torque of 5 Nm.
- Tie the cables for the thermocontact and the sensor bearing to the middle power cable.

D-side

- Install a gasket (30) on the bearing housing (29).
- Press the bearing (28) into the bearing housing.
- Fit the circlip (26).

https://www.forkliftpdfmanuals.com/

T-code	**Valid from serial number**
403-414, 669-671, 716-718	713962-
Date	**Order number**
2005-06-01	218920-040

12.5 Installation instructions for external temperature sensor

Number 170384

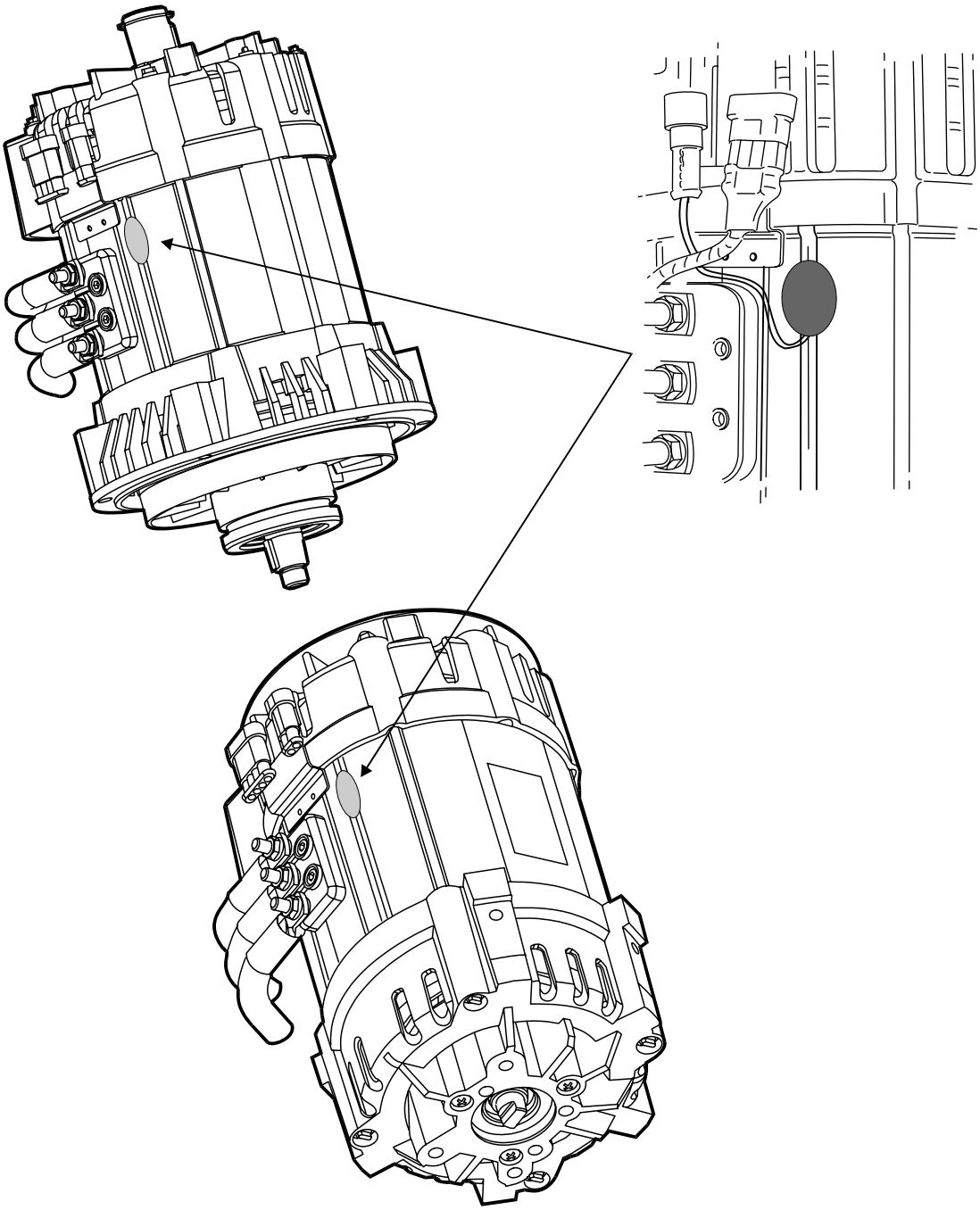

 © BT Europe AB
https://www.forkliftpdfmanuals.com/

Electric drive motor – 1760

Installation instructions for external temperature sensor

Valid from serial number	**T-code**
713962-	403-414, 669-671, 716-718
Order number	**Date**
218920-040	2005-06-01

A fully functional temperature sensor mounted inside the motor should have a resistance value of approx. 550 ohm at a temperature of 20 degrees.

The temperature sensor mounted on the outside has a resistance value of approx. 670 ohm at a temperature of 20 degrees.

- The temperature sensor can be mounted to the right or left of the connection terminal block, depending on which side is easiest to access.
- Scrape the surface clean where the new temperature sensor is to be mounted.
- Place the temperature sensor as shown in the picture.

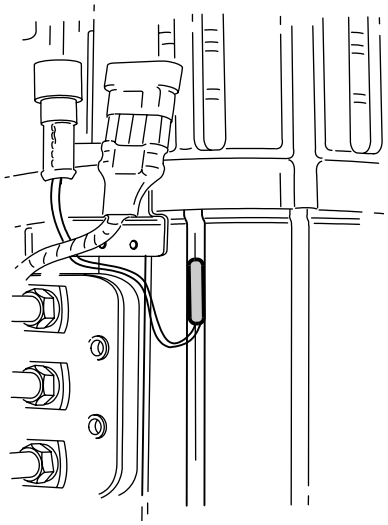

- Apply metallic lacquer over the sensor. Ensure that the entire sensor is covered by the metallic lacquer.

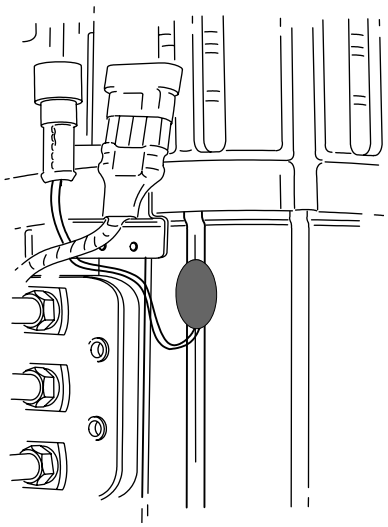

https://www.forkliftpdfmanuals.com/

- Fasten the metallic lacquer and the sensor with masking tape and allow it to harden.

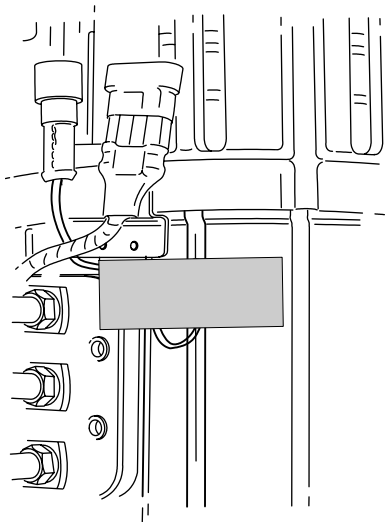

- Remove the masking tape. The temperature sensor should now be fixed in place and covered entirely by metallic lacquer.
- Remove the ferrite block from the old sensor and mount it on the cable to the new sensor.
- Remove the contact from the broken sensor, which is attached to the motor.
- Place the new sensor contact in the old bracket and connect it to the cabling.
- Fasten the old contact and its cabling using a cable tie so it cannot damage anything.

 © BT Europe AB

https://www.forkliftpdfmanuals.com/