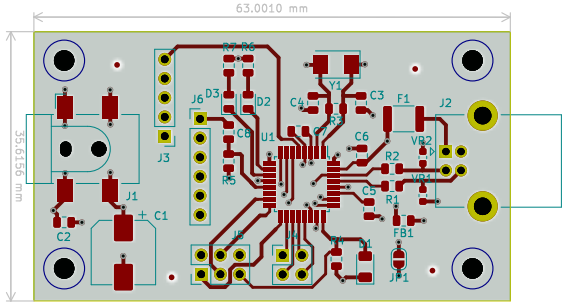

An example of KiBot variants

Instituto Nacional de Tecnología Industrial

Sheet: Front copper
File: t1.kicad_pcb

Title:

Size: A4	Date: 2024-09-17_12-57-19	**Rev: ${git_hash}**
KiCad E.D.A. 8.0.4+1 + KiBot v1.7.1		Id: 1/8