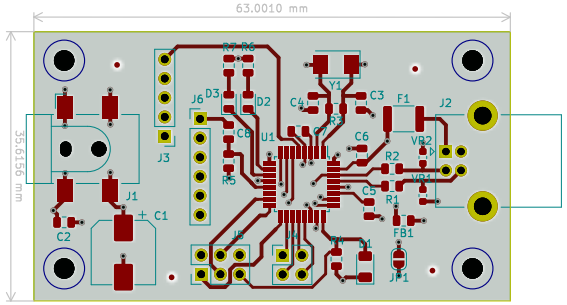

An example of KiBot variants

Instituto Nacional de Tecnología Industrial

Sheet: Front copper
File: t1.kicad_pcb

Title:

Size: A4	Date: 2025-04-03_14-05-39	**Rev: ${git_hash}**
KiCad E.D.A. 9.0.1 + KiBot v1.8.4		Id: 1/8