Lecture 2:

Spatio-Temporal Receiver Structures (TDMA)

Overview

- single-user white noise: MLSE detection, MFB and diversity
- single-user white-noise ST processing (equalization)
- single-user colored-noise ST processing (equalization)

Stationary Stochastic Processes

- discrete-time stochastic vector process = sequence of random vectors
- description of distribution of stochastic processes often limited to first and second order moments
- for zero mean processes: second-order moments crucial
  in the frequency domain: *power spectral density function* (psdf)
- The random vector process $\{\mathbf{y}[k]\}$ is *wide-sense stationary* (WSS) if its mean

$$\mathrm{E}\,\mathbf{y}[k] \;=\; m_{\mathbf{y}}$$

does not depend on time k and its *autocorrelation function* (acf)

$$r_{\mathbf{yy}}[n] \;=\; \mathrm{E}\,\mathbf{y}[k{+}n]\,\mathbf{y}^H[k] \qquad \text{“acf at lag } n\text{”}$$

only depends on the time lag n between the two samples (not on time). Corresponding central moment : *autocovariance function*

$$c_{\mathbf{yy}}[n] \;=\; \mathrm{E}\,(\mathbf{y}[k{+}n]{-}m_{\mathbf{y}})(\mathbf{y}[k]{-}m_{\mathbf{y}})^H \;=\; r_{\mathbf{yy}}[n] - m_{\mathbf{y}} m_{\mathbf{y}}^H$$

Stationary Stochastic Processes (2)

- two jointly WSS random processes $\{\mathbf{x}[k]\}$ and $\{\mathbf{y}[k]\}$ have a *cross-correlation function* (ccf)

$$r_{\mathbf{xy}}[n] \;=\; \mathrm{E}\,\mathbf{x}[k{+}n]\,\mathbf{y}^H[k]$$

and a *cross-covariance function*

$$c_{\mathbf{xy}}[n] \;=\; \mathrm{E}\,(\mathbf{x}[k{+}n]{-}m_{\mathbf{x}})(\mathbf{y}[k]{-}m_{\mathbf{y}})^H \;=\; r_{\mathbf{xy}}[n] - m_{\mathbf{x}}m_{\mathbf{y}}^H$$

- Unless stated otherwise, we shall consider below processes with zero mean so that the autocorrelation function and the autocovariance function are equal. Nevertheless, the rest of this discussion holds for the general case.
- The following symmetry properties follow immediately from the definition:

$$\begin{aligned} r_{\mathbf{xy}}[n] &= r_{\mathbf{yx}}^H[-n] \\ r_{\mathbf{yy}}[n] &= r_{\mathbf{yy}}^H[-n] \;. \end{aligned}$$

Stationary Stochastic Processes (3)

- We can consider the z-transforms of the acf and the ccf

$$\mathrm{S}_{\mathbf{yy}}(z) = \sum_{n=-\infty}^{\infty} r_{\mathbf{yy}}[n]\, z^{-n} \quad , \quad \mathrm{S}_{\mathbf{xy}}(z) = \sum_{n=-\infty}^{\infty} r_{\mathbf{xy}}[n]\, z^{-n} \; .$$

- *auto-psdf* $S_{\mathbf{yy}}(f) = \mathrm{S}_{\mathbf{yy}}(e^{j2\pi f})$ and *cross-psdf* $S_{\mathbf{xy}}(f) = \mathrm{S}_{\mathbf{xy}}(e^{j2\pi f})$

$$\begin{aligned} S_{\mathbf{yy}}(f) &= \sum_{n=-\infty}^{\infty} r_{\mathbf{yy}}[n]\, e^{-j2\pi f n} \qquad \text{Wiener-Khinchin relation} \\ S_{\mathbf{xy}}(f) &= \sum_{n=-\infty}^{\infty} r_{\mathbf{xy}}[n]\, e^{-j2\pi f n} \; . \end{aligned}$$

- Because we normalized the sampling period to 1, the sampling frequency is also normalized to 1 and hence $S_{\mathbf{xy}}(f)$ and $S_{\mathbf{yy}}(f)$ are periodic with period 1.

Stationary Stochastic Processes (4)

- A basic discrete-time random process is white noise with acf

$$r_{yy}[n] \;=\; \sigma_y^2\,\delta_{n0}$$

where δ_{kn} is the Kronecker delta. This means that the white process is zero mean and all samples are uncorrelated. The psdf becomes

$$S_{yy}(f) \;=\; \sigma_y^2$$

which is constant. E.g. $S_{aa}(z) = \sigma_a^2$, white symbols, or $S_{\mathbf{vv}}(z) = \sigma_v^2 I_m$, spatiotemporally white noise.

- The filtering of a WSS process by a linear time-invariant (LTI) filter produces another WSS process. Indeed, let $\mathbf{y}[k] = \sum_m \mathbf{h}[k-m]\mathbf{x}[m]$ where $\{\mathbf{x}[k]\}$ is WSS. Then we get for the mean

$$\mathrm{E}\,\mathbf{y}[k] \;=\; \sum_m \mathbf{h}[m]\,\mathrm{E}\,\mathbf{x}[k-m] \;=\; (\sum_m \mathbf{h}[m])\,m_{\mathbf{x}} \;=\; \boldsymbol{H}(0)\,m_{\mathbf{x}} \;=\; m_{\mathbf{y}}$$

which does indeed not depend on n. Furthermore,

$$\mathrm{E}\,\mathbf{y}[k+n]\mathbf{x}^H[k] \;=\; \sum_m \mathbf{h}[k+n-m]\,\mathrm{E}\,\mathbf{x}[m]\,\mathbf{x}^H[k] \;=\; \sum_m \mathbf{h}[k+n-m]\,r_{\mathbf{xx}}[m-k]$$

$$=\; \sum_m \mathbf{h}[n-m]\,r_{\mathbf{xx}}[m] \;=\; \mathbf{h}[n] * r_{\mathbf{xx}}[n] \;=\; r_{\mathbf{yx}}[n]$$

Stationary Stochastic Processes (5)

- Filtering relationships:

$$\boldsymbol{X}(f) = \boldsymbol{G}(f)\,\boldsymbol{U}(f)$$

$$\boldsymbol{Y}(f) = \boldsymbol{H}(f)\,\boldsymbol{V}(f)$$

- Cross-psdf:

$$S_{\mathbf{xy}}(f) = \boldsymbol{G}(f) S_{\mathbf{uv}}(f) \boldsymbol{H}^H(f)\,.$$

- In time domain: $r_{\mathbf{xy}}[n] = \mathbf{g}[n] * r_{\mathbf{uv}}[n] * \mathbf{h}^H[-n]$
- With z-transforms: $\mathrm{S}_{\mathbf{xy}}(z) = \mathbf{G}(z)\mathrm{S}_{\mathbf{uv}}(z)\,\mathbf{H}^\dagger(z)$
  where $\mathbf{H}^\dagger(z) = \mathbf{H}^H(1/z^*)$ is the *filter matched to* $\mathbf{H}(z)$: *paraconjugate*: Hermitian transpose and time reversal of impulse response coefficients
- $\mathrm{S}_{\mathbf{xy}}(z) = \mathrm{S}^\dagger_{\mathbf{yx}}(z)\,,\ \mathrm{S}_{\mathbf{yy}}(z) = \mathrm{S}^\dagger_{\mathbf{yy}}(z)\,,$
  $S_{\mathbf{xy}}(f) = S^H_{\mathbf{yx}}(f)\,,\ S_{\mathbf{yy}}(f) = S^H_{\mathbf{yy}}(f)$

Stationary Stochastic Processes (6)

- FIR Filter: $\mathbf{y}[k] = \sum_{n=0}^{N-1} \mathbf{h}[k-n]\mathbf{x}[n]$, $\mathbf{H}(z) = \sum_{n=0}^{N-1} \mathbf{h}[n]z^{-n}$

- matched filter:
  $\mathbf{F}(z) = \mathbf{H}^\dagger(z) \;\Rightarrow\; \mathbf{f}[n] = \mathbf{h}^H[-n]$, $n = -(N-1), \ldots, 0$
  input-output relation: $\mathbf{W}(z) = \mathbf{F}(z)\,\mathbf{V}(z) = \mathbf{H}^\dagger(z)\,\mathbf{V}(z)$

$$\begin{aligned}\mathbf{w}[k] &= \sum_{n=-(N-1)}^{0} \mathbf{f}[n]\mathbf{v}[k-n] = \sum_{n=-(N-1)}^{0} \mathbf{h}^H[-n]\mathbf{v}[k-n] \\ &= \sum_{n=0}^{N-1} \mathbf{h}^H[n]\mathbf{v}[k+n]\end{aligned}$$

- channel $--$ channel-matched filter cascade:

$$\mathbf{G}(z) = \mathbf{H}^\dagger(z)\,\mathbf{H}(z) = \sum_{n=-(N-1)}^{N-1} \mathbf{g}[n]\,z^{-n} = \mathbf{G}^\dagger(z)$$
$$\mathbf{g}[k] = \sum_{n=0}^{N-1} \mathbf{h}^H[n]\,\mathbf{h}[k+n] = \sum_{n=0}^{N-1-k} \mathbf{h}^H[n]\,\mathbf{h}[k+n] = g^H[-k],\; k \geq 0$$
$$\mathbf{g}[0] = \sum_{n=0}^{N-1} \mathbf{h}^H[n]\,\mathbf{h}[n] = \sum_{n=0}^{N-1} \|\mathbf{h}[n]\|^2 = \|\mathbf{H}\|^2$$

Stationary Stochastic Processes (7)

- case of $\mathbf{H}(z)$ vectorial: $\boldsymbol{H}(z) = \begin{bmatrix} \mathrm{H}_1(z) \\ \vdots \\ \mathrm{H}_m(z) \end{bmatrix}$

  $\mathbf{f}[n] = \mathbf{h}^H[-n]$:
  1. phase compensation
  2. amplitude matching
  3. delay compensation

  $\mathrm{G}(f) = \sum_{i=1}^{m} |\mathrm{H}_i(f)|^2 \rightarrow$ constant as m gets large, hence $g[k]/g[0] \rightarrow 0$ for $k \neq 0$: a matched filter tends to become a (ZF) equalizer as the number of subchannels grows

- case of $\mathbf{H}(z)$ matricial $(m \times p)$: furthermore $\mathbf{G}(z)$ will tend to become diagonal as m/p gets large: the matched filter tends to furthermore become an interference canceler.

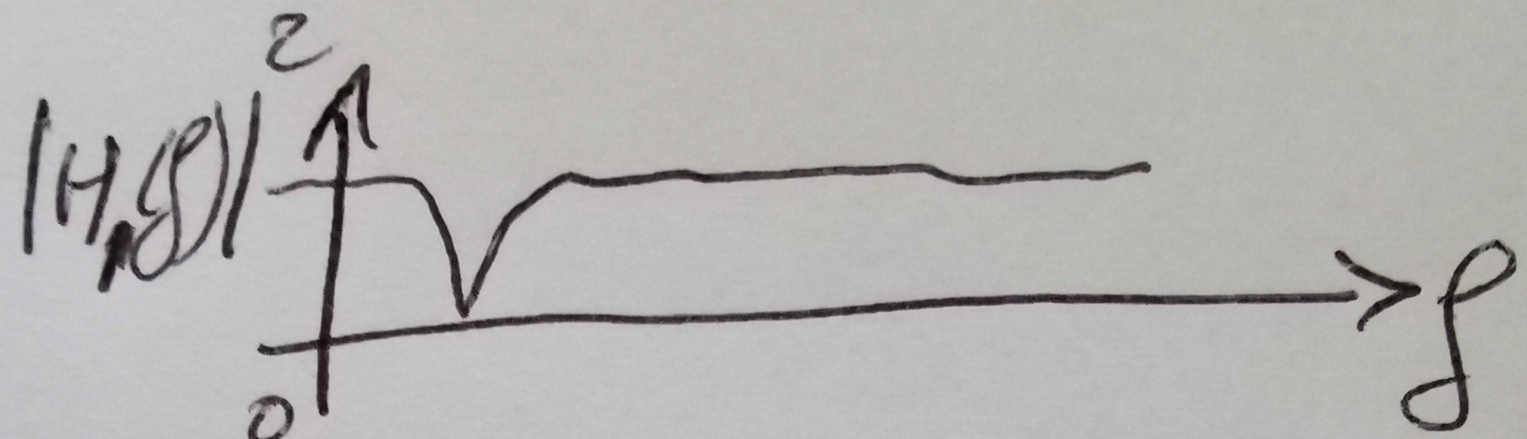
$|H_1(f)|^2$
0
f

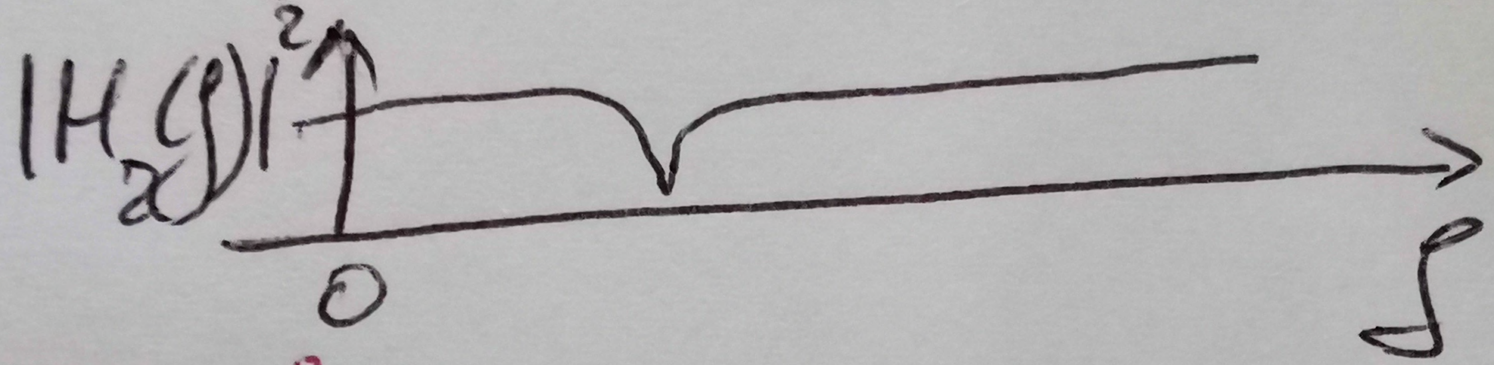
$|H_2(f)|^2$
0
f

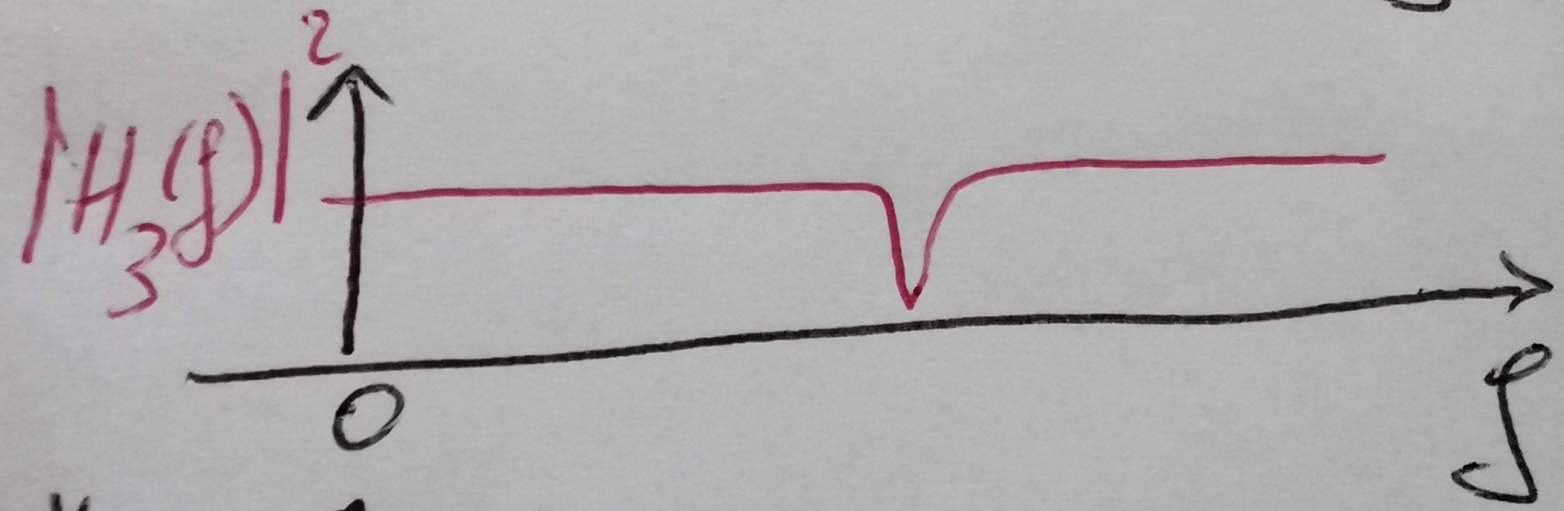
$|H_3(f)|^2$
0
f

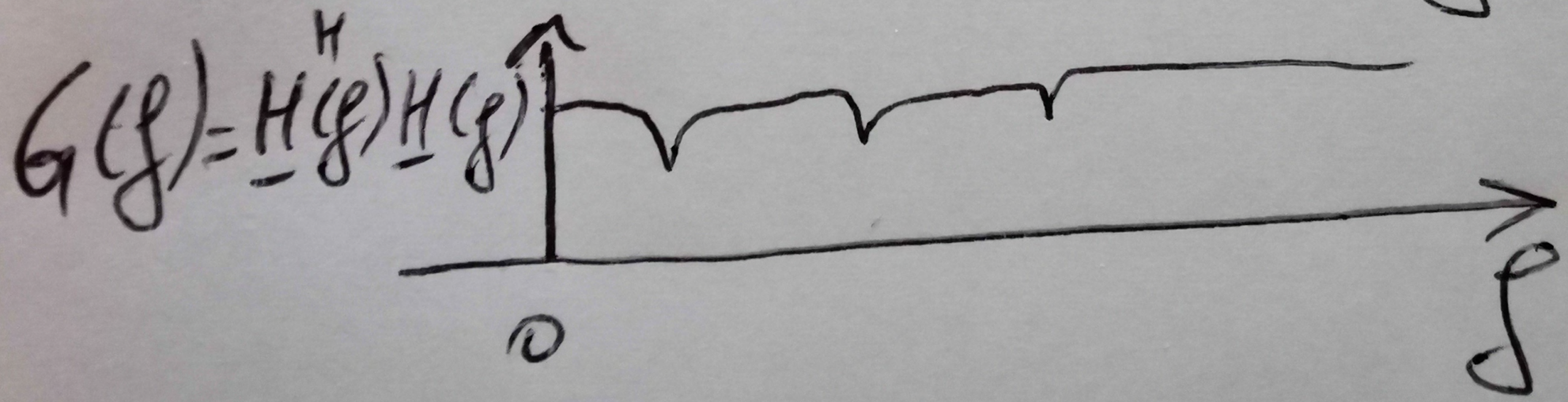
$G(f) = \underline{H}^H(f)\underline{H}(f)$
0
f

Stationary Stochastic Processes (8)

- consider $1 \times m$ filter $\mathbf{F}(z)$ in cascade with $m \times 1$ filter $\mathbf{H}(z)$:
  $\mathbf{F}(z)\,\mathbf{H}(z) = G(z)$ or

$$\left(\sum_{l=0}^{L-1} \mathbf{f}[l]\, z^{-l}\right)\left(\sum_{n=0}^{N-1} \mathbf{h}[n]\, z^{-n}\right) = \sum_{k=0}^{N+L-2} g[k]\, z^{-k} = \begin{bmatrix} g[0] \\ g[1] \\ \vdots \\ g[N+L-2] \end{bmatrix}^T \begin{bmatrix} 1 \\ z^{-1} \\ \vdots \\ z^{-(N+L-2)} \end{bmatrix}$$

- by equating the vectors of coefficients on both sides of the z-transform, we get for this convolution in matrix representation in the time domain

$$[\mathbf{f}[0] \quad \cdots \quad \mathbf{f}[L-1]] \begin{bmatrix} \mathbf{h}[0] & \cdots & \mathbf{h}[N-1] & 0_{m\times 1} & \cdots & 0_{m\times 1} \\ 0_{m\times 1} & \mathbf{h}[0] & \cdots & \mathbf{h}[N-1] & \ddots & \vdots \\ \vdots & \ddots & \ddots & \ddots & \ddots & 0_{m\times 1} \\ 0_{m\times 1} & \cdots & 0_{m\times 1} & \mathbf{h}[0] & \cdots & \mathbf{h}[N-1] \end{bmatrix} = \begin{bmatrix} g[0] \\ g[1] \\ \vdots \\ g[N+L-2] \end{bmatrix}^T$$

Stationary Stochastic Processes (9)

Indeed: $G(z) = [g[0]\ g[1] \cdots g[N{+}L{-}2]] \begin{bmatrix} 1 \\ z^{-1} \\ \vdots \\ z^{-(N+L-2)} \end{bmatrix} (\otimes I_p)$ (for p sources)

$$= [\mathbf{f}[0] \cdots \mathbf{f}[L{-}1]] \begin{bmatrix} \mathbf{h}[0] & \cdots & \mathbf{h}[N{-}1] & 0_{m\times 1} & \cdots & 0_{m\times 1} \\ 0_{m\times 1} & \mathbf{h}[0] & \cdots & \mathbf{h}[N{-}1] & \ddots & \vdots \\ \vdots & \ddots & \ddots & \ddots & \ddots & 0_{m\times 1} \\ 0_{m\times 1} & \cdots & 0_{m\times 1} & \mathbf{h}[0] & \cdots & \mathbf{h}[N{-}1] \end{bmatrix} \begin{bmatrix} 1 \\ z^{-1} \\ \vdots \\ z^{-(N+L-2)} \end{bmatrix}$$

$$= [\mathbf{f}[0] \cdots \mathbf{f}[L{-}1]] \left(\begin{bmatrix} 1 \\ z^{-1} \\ \vdots \\ z^{-(L-1)} \end{bmatrix} \otimes I_m \right) \mathbf{H}(z) = \mathbf{F}(z)\ \mathbf{H}(z)$$

Math Background

- Kronecker product is a block matrix, block (i, j) is given by

$$(\mathbf{A} \otimes \mathbf{B})_{i,j} = \mathbf{A}_{i,j}\, \mathbf{B}$$

- for square matrices $\mathbf{A}$, $\mathbf{B}$ of sizes nxn and mxm resp.

$$\det(\mathbf{A} \otimes \mathbf{B}) = \det^{m}(\mathbf{A})\ \det^{n}(\mathbf{B})$$

Stationary Stochastic Processes (10)

- matched filter: the coefficients are complex conjugated and transposed and the impulse response gets time reversed so that in the cascade all energy adds up constructively in the middle tap!

$$[\mathbf{g}[-(N-1)] \;\cdots\; \mathbf{g}[0] \;\cdots\; \mathbf{g}[N-1]] \;=\; \underbrace{\left[\mathbf{h}^H[N-1]\cdots\mathbf{h}^H[0]\right]}_{\left[\mathbf{f}[-(N-1)]\cdots\mathbf{f}[0]\right]} \begin{bmatrix} \mathbf{h}[0] & \cdots & & \mathbf{h}[N-1] & 0_{m\times 1} & \cdots & 0_{m\times 1} \\ 0_{m\times 1} & \mathbf{h}[0] & \cdots & \mathbf{h}[N-2] & \mathbf{h}[N-1] & \ddots & \vdots \\ \vdots & \ddots & \ddots & \ddots & & \ddots & 0_{m\times 1} \\ 0_{m\times 1} & \cdots & 0_{m\times 1} & \mathbf{h}[0] & & \cdots & \mathbf{h}[N-1] \end{bmatrix}$$

$$= \sum_{i=0}^{N-1} \|\mathbf{h}[i]\|^2$$

Stationary Stochastic Processes (11)

- Wiener (LMMSE) filter:

$$\widehat{\mathbf{x}}[k] = \mathrm{S}_{\mathbf{xy}}(q)\,\mathrm{S}_{\mathbf{yy}}^{-1}(q)\,\mathbf{y}[k]$$

- LMMSE orthogonality property:

$$\mathrm{S}_{\widetilde{\mathbf{x}}\mathbf{y}}(z) = 0$$

- Pythagorean theorem for error spectrum:

$$\mathrm{S}_{\widetilde{\mathbf{x}}\widetilde{\mathbf{x}}}(z) = \mathrm{S}_{\mathbf{xx}}(z) - \mathrm{S}_{\widehat{\mathbf{x}}\widehat{\mathbf{x}}}(z) = \mathrm{S}_{\mathbf{xx}}(z) - \mathrm{S}_{\mathbf{xy}}(z)\mathrm{S}_{\mathbf{yy}}^{-1}(z)\mathrm{S}_{\mathbf{yx}}(z)$$

Spatio-Temporal (ST) Single-User (SU) Receivers

- Assuming the channel delay spread to be about NT, then we get after sampling at the symbol rate the discrete-time vector channel impulse response $\mathbf{h}(k)$, $k = 0, 1, \ldots, N-1$ (putting time zero at the first nonzero sample). Channel transfer function $\mathbf{H}(z) = \sum_{n=0}^{N-1} \mathbf{h}[n] z^{-n}$.
- RX signal: $\mathbf{y}[k] = \mathbf{H}(q)\, a[k] + \mathbf{v}[k]$, $\mathbf{H}(q) = \sum_{n=0}^{N-1} \mathbf{h}[n]\, q^{-n}$

  delay operator: $q^{-1} a[k] = a[k-1] \Rightarrow \mathbf{H}(q)\, a[k] = \sum_{n=0}^{N-1} \mathbf{h}[n]\, a[k-n]$
- MFB for multichannel Maximum Likelihood Sequence Estimation (MLSE): SNR $\sim \sum_{k=0}^{N-1} \sum_{i=1}^{m} |h_i(k)|^2$: space and time diversity.

ST SU Receivers, White Noise: Linear Rx

- MISO (multi input single output) linear equalizer = spatio-temporal filter:

$$\widehat{a}[k] = \mathbf{F}(q)\,\mathbf{y}[k]\ ,\ \ \mathbf{F}(q) = \sum_{l=0}^{L-1} \mathbf{f}[l]\,q^{-l}\ ,\ \ q^{-1}\mathbf{y}[k] = \mathbf{y}[k-1]$$

- spatial $\rightarrow$ spatio-temporal receivers:

$\mathbf{h} \Rightarrow \mathbf{H}(z)\,,\ \mathbf{f} \Rightarrow \mathbf{F}(z)$

MF: $\mathbf{h}^H \Rightarrow \mathbf{H}^\dagger(z) = \mathbf{H}^H(1/z^*)$ (paraconjugate)

unbiased:

$$\mathbf{f}_i\mathbf{h}_i = 1 \ \rightarrow\ \mathbf{F}_i(q)\mathbf{H}_i(q)|_{[0]} = \frac{1}{2\pi j}\oint \frac{dz}{z}\mathbf{F}_i(z)\mathbf{H}_i(z) = \left\langle \mathbf{F}_i^\dagger, \mathbf{H}_i \right\rangle = 1 =$$

$$\sum_{k=0}^{N-1} \mathbf{f}_i[-k]\mathbf{h}_i[k] \ \ \Rightarrow\ \mathbf{f}_i[k] \text{ should be non-zero in } k \in \{-(N-1), \ldots, 0\}$$

ZF: $\mathbf{fh} = I_p \ \Rightarrow\ \mathbf{F}(z)\mathbf{H}(z) = I_p \ \ \Rightarrow$ unbiased

interference: intersymbol interference (ISI) + interuser interf. (IUI)

Math Background

- An **inner product** $< .,. >$ over the complex numbers associates a complex number $< \mathbf{x}, \mathbf{y} > \in \mathcal{C}$ with two vectors **x** and **y** of the vector space $\mathcal{V}$ we are considering, and it has the following properties:

  1. linearity: $\forall \alpha_1, \alpha_2, \beta_1, \beta_2 \in \mathcal{C}, \quad \forall \mathbf{x}, \mathbf{x}_1, \mathbf{x}_2, \mathbf{y}, \mathbf{y}_1, \mathbf{y}_2 \in \mathcal{V}$:

$$\begin{aligned} < \alpha_1 \mathbf{x}_1 + \alpha_2 \mathbf{x}_2, \mathbf{y} > &= \alpha_1^* < \mathbf{x}_1, \mathbf{y} > + \alpha_2^* < \mathbf{x}_2, \mathbf{y} > \\ < \mathbf{x}, \beta_1 \mathbf{y}_1 + \beta_2 \mathbf{y}_2 > &= < \mathbf{x}, \mathbf{y}_1 > \beta_1 + < \mathbf{x}, \mathbf{y}_2 > \beta_2 \end{aligned} \tag{1}$$

  2. symmetry: $< \mathbf{x}, \mathbf{y} > = < \mathbf{y}, \mathbf{x} >^*$

  3. non-degeneracy (of the norm induced by the inner product):
     $< \mathbf{x}, \mathbf{x} > = \|\mathbf{x}\|^2 \geq 0$. If $\|\mathbf{x}\| = 0$, then $\mathbf{x} = 0$.

- **Cauchy-Schwarz inequality**: $| < \mathbf{x}, \mathbf{y} > |^2 \leq \|\mathbf{x}\|^2 \, \|\mathbf{y}\|^2$, $=$ iff $\exists \alpha \in \mathcal{C} : \mathbf{x} = \alpha \, \mathbf{y}$

- example: vector transfer functions in z domain

$$\langle \mathbf{G}(.), \mathbf{H}(.) \rangle \;=\; \frac{1}{2\pi j} \oint \frac{dz}{z} \mathbf{G}^{\dagger}(z) \mathbf{H}(z) \;=\; \mathcal{Z}^{-1}(\mathbf{G}^{\dagger}(z)\mathbf{H}(z))\Big|_{k=0}$$

- example: vector transfer functions in Fourier domain

$$\langle \boldsymbol{G}(.), \boldsymbol{H}(.) \rangle \;=\; \int_{-0.5}^{0.5} \boldsymbol{G}^{H}(f)\, \boldsymbol{H}(f)\, df \;=\; \mathcal{F}^{-1}(\boldsymbol{G}^{H}(f)\boldsymbol{H}(f))\Big|_{k=0}$$

- example: causal vector impulse responses

$$\langle \mathbf{g}[.], \mathbf{h}[.] \rangle \;=\; \sum_{k=0}^{\infty} \mathbf{g}^{H}[k]\mathbf{h}[k] \;=\; \mathbf{g}^{H}[-k] * \mathbf{h}[k]\Big|_{k=0} \quad , \quad \|\mathbf{h}[.]\|^2 \;=\; \sum_{k=0}^{\infty} \|\mathbf{h}[k]\|^2$$

Vector spaces are isometric: if $\mathbf{G}(z), \mathbf{H}(z)$ or $\boldsymbol{G}(f), \boldsymbol{H}(f)$ are the z or Fourier transforms of $\mathbf{g}[.], \mathbf{h}[.]$, then

$$\langle \mathbf{g}[.], \mathbf{h}[.] \rangle \overset{\text{Parseval}}{=} \langle \boldsymbol{G}(.), \boldsymbol{H}(.) \rangle \;=\; \langle \mathbf{G}(.), \mathbf{H}(.) \rangle$$

ST SU Receivers, White Noise: MFB Interpretations

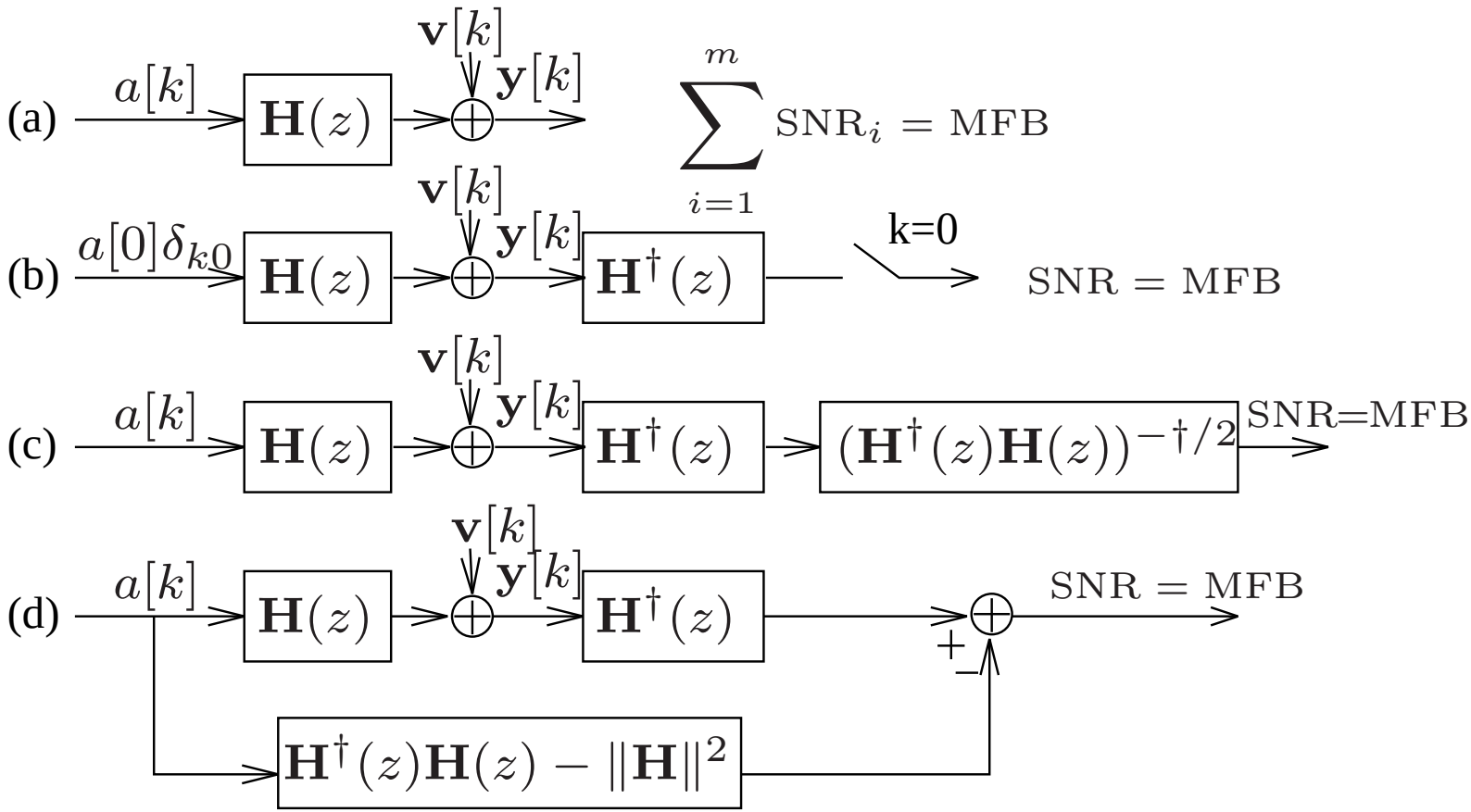

$$\underline{y}[k] = \underline{H}(q)\, a[k] + \underline{v}[k] \qquad S_{\underline{v}\underline{v}}(z) = \sigma_v^2 I_m$$

$$y_i[k] = \underbrace{H_i(q)\, a[k]}_{x_i[k]} + v_i[k], \quad i = 1, \dots, m$$

$$\sigma_{x_i}^2 = r_{x_i x_i}[0] = \int_{-\frac{1}{2}}^{\frac{1}{2}} S_{x_i x_i}(f)\, df = \int_{-\frac{1}{2}}^{\frac{1}{2}} H_i(f) \underbrace{\sigma_a^2}_{S_{aa}(f)} H_i^*(f)\, df$$

$$= \sigma_a^2 \|H_i(f)\|^2$$

$$SNR_i = \frac{\sigma_{x_i}^2}{\sigma_{v_i}^2} = \frac{\sigma_a^2}{\sigma_v^2} \|H_i(f)\|^2, \quad SNR = \sum_{i=1}^{m} SNR_i$$

(in case of white noise)

ST SU Receivers, White Noise: MFB Interpretations (2)

- MFB $= \|\mathbf{H}\|^2 \sigma_a^2/\sigma_v^2$

$$\|\mathbf{H}\|^2 = \langle \mathbf{H}, \mathbf{H} \rangle = \int_{-\frac{1}{2}}^{\frac{1}{2}} \|\mathbf{H}(e^{j2\pi f})\|^2 df = \sum_{n=0}^{N-1} \|\mathbf{h}[n]\|^2 \ \left(= \|\mathbf{H}^\dagger\|^2\right)$$

(a) in (spatially & temporally) white noise, MFB = sum of SNRs

(b) Matched Filter $\mathbf{F}(z) = \mathbf{H}^\dagger(z)$ = filter that maximizes SNR in output sample at same instant as isolated input sample, MFB = SNR at MF output $\widehat{a}[k]$

$$\begin{aligned} \widehat{a}[0] = \mathbf{F}(q)\mathbf{y}[k]|_{k=0} &= \mathbf{F}(q)\mathbf{H}(q)a[k]\,\delta_{k0}|_{k=0} + \mathbf{F}(q)\mathbf{v}[k]|_{k=0} \\ &= \left\langle \mathbf{F}^\dagger, \mathbf{H} \right\rangle a[0] + \mathbf{F}(q)\mathbf{v}[k]|_{k=0} \end{aligned}$$

$$\text{SNR} = \frac{|\left\langle \mathbf{F}^\dagger, \mathbf{H} \right\rangle|^2}{\|\mathbf{F}^\dagger\|^2} \frac{\sigma_a^2}{\sigma_v^2} \leq \|\mathbf{H}\|^2 \frac{\sigma_a^2}{\sigma_v^2} = \text{MFB with equality for } \mathbf{F} \sim \mathbf{H}^\dagger$$

$$w[k] = F(q)\,\underline{v}[k], \quad F(q)\,\underline{v}[k]\Big|_{k=0} = w[0]$$

$$\sigma_w^2 = r_{ww}[0] = \int_{-\frac{1}{2}}^{\frac{1}{2}} S_{ww}(f)\,df = \int_{-\frac{1}{2}}^{\frac{1}{2}} F(f)\,\underbrace{S_{\underline{v}\underline{v}}(f)}_{=\sigma_v^2 I_m}\,F^H(f)\,df$$

$$= \sigma_v^2 \left\| F^H(f) \right\|^2 = \sigma_v^2 \left\| F^\dagger(z) \right\|^2$$

$$= \sigma_v^2 \int_{-\frac{1}{2}}^{\frac{1}{2}} \left(F^H(f)\right)^H F^H(f)\,df = \sigma_v^2 \frac{1}{2\pi j} \oint \frac{dz}{z} F(z) F^\dagger(z)$$

ST SU Receivers, White Noise: MFB Interpretations (3)

(b) Alternative derivation:

$$\begin{bmatrix} \mathbf{y}[0] \\ \vdots \\ \mathbf{y}[N-1] \end{bmatrix} = \begin{bmatrix} \mathbf{h}[0] \\ \vdots \\ \mathbf{h}[N-1] \end{bmatrix} \underbrace{a[0]}_{\theta} + \begin{bmatrix} \mathbf{v}[0] \\ \vdots \\ \mathbf{v}[N-1] \end{bmatrix} \longrightarrow Y = H\,\theta + V$$

$$\hat{\theta} = \frac{H^H Y}{H^H H} = \frac{\sum_{k=0}^{N-1} \mathbf{h}^H[k]\,\mathbf{y}[k]}{\sum_{k=0}^{N-1} \mathbf{h}^H[k]\,\mathbf{h}[k]}, \quad \tilde{\theta} = \frac{H^H V}{H^H H}\,,\ \sigma_{\tilde{\theta}}^2 = \sigma_v^2 \frac{H^H H}{(H^H H)^2} = \frac{\sigma_v^2}{H^H H}$$

$$\text{SNR} = \frac{\sigma_\theta^2}{\sigma_{\tilde{\theta}}^2} = \frac{\sigma_a^2}{\frac{\sigma_v^2}{H^H H}} = \frac{\sigma_a^2}{\sigma_v^2} \|\mathbf{H}\|^2$$

ST SU Receivers, White Noise: MFB Interpretations (4)

(c) with continuous input symbol stream, MFB = SNR at WMF output

spectral factorization:

$S(z) = \mathbf{H}^\dagger(z)\mathbf{H}(z)$ behaves like a scalar spectrum, *minimum-phase spectral factor* $g(z)$: $g(z)\,g^\dagger(z) = S(z)$: $S(e^{j2\pi f}) = |g(e^{j2\pi f})|^2 \geq 0$

notation: $g(z) = S^{1/2}(z) = (\mathbf{H}^\dagger(z)\mathbf{H}(z))^{1/2}$

Whitened MF $= \mathbf{F}(z) = g^{-\dagger}(z)\,\mathbf{H}^\dagger(z)$: $\mathbf{F}(z)\mathbf{F}^\dagger(z) = 1$

paraunitary, lossless, allpass

$$\widehat{a}[k] = \mathbf{F}(q)\mathbf{y}[k] = \mathbf{F}(q)\mathbf{H}(q)a[k] + \mathbf{F}(q)\mathbf{v}[k] = \underbrace{g(q)}_{\text{length } N}\; a[k] + \underbrace{\mathbf{F}(q)\mathbf{v}[k]}_{\text{white}}$$

SNR =

$$\frac{\|g\|^2\sigma_a^2}{\|\mathbf{F}^\dagger\|^2\sigma_v^2} = \frac{\|\mathbf{H}\|^2\sigma_a^2}{\sigma_v^2}\ , \quad \|\mathbf{H}\|^2 = \mathbf{H}^\dagger(q)\mathbf{H}(q)\Big|_{[0]} = g^\dagger(q)g(q)\Big|_{[0]} = \|g\|^2$$

Math Background: Spectral Factorization - Minimum-Phase Factors

- $S(z) = \mathbf{H}^\dagger(z)\mathbf{H}(z)$ behaves like a scalar spectrum, *minimum-phase spectral factor* $g(z)$: $g(z)\, g^\dagger(z) = S(z)$: $S(e^{j2\pi f}) = |g(e^{j2\pi f})|^2 \geq 0$, notation: $g(z) = S^{1/2}(z) = (\mathbf{H}^\dagger(z)\mathbf{H}(z))^{1/2}$
  $g(e^{j2\pi f}) = |g(e^{j2\pi f})|\, e^{j\phi(f)}$, $\phi(f) = \arg[g(e^{j2\pi f})], |g(e^{j2\pi f})| = \sqrt{S(e^{j2\pi f})}$
- zero phase $g()$ leads to symmetric $g[k]$ $\Rightarrow$ not causal
- minimum-phase factor: phase response from magnitude response: **Bode** relation (continuous-time):
  $\phi(f) = -\mathcal{H}\{\ln(|g(e^{j2\pi f})|)\}$, **Hilbert Transform** $\mathcal{H}\{x(t)\} = \frac{1}{\pi}\int_{-\infty}^{\infty} \frac{x(\tau)}{t-\tau} d\tau$
  From constraint: anti-causal part is zero.
- FIR discrete-time case:

$$S(z) = \underbrace{\alpha}_{>0} \prod_{i=1}^{N-1} (1 - z_i z^{-1})(1 - z_i^* z)\,,\ |z_i| < 1$$

  $g(z) = S^{1/2}(z) = \sqrt{\alpha} \prod_{i=1}^{N-1} (1 - z_i z^{-1})$
- Minimum-phase response $\phi(f)$ leads to minimal energy $\sum_{i=1}^{k} |g[i]|^2$ ($\forall k$) among all phase responses for a given magnitude response. Compare min-phase $1 - z_i z^{-1}$ to max-phase $1 - z_i^* z = (1 - z_i z^{-1})^\dagger$.

ST SU Receivers, White Noise: MFB Interpretations (5)

(d) MFB = SNR at decision point of a non-causal decision feedback equalizer (NC DFE) with forward filter the matched filter $\mathbf{H}^\dagger(z)$ and feedback filter the non-causal filter $\mathbf{H}^\dagger(z)\mathbf{H}(z) - \|\mathbf{H}\|^2$.
Note that $\|\mathbf{H}\|^2 = \mathbf{H}^\dagger(q)\mathbf{H}(q)\big|_{[0]}$.

Output signal $= \|\mathbf{H}\|^2\, a[k] + \mathbf{H}^\dagger \mathbf{v}[k]$

Output SNR $= \dfrac{(\|\mathbf{H}\|^2)^2\sigma_a^2}{\frac{1}{2\pi j}\oint \frac{dz}{z}\mathbf{H}^\dagger(z)S_{\mathbf{vv}}(z)\mathbf{H}(z)} = \dfrac{\|\mathbf{H}\|^4\sigma_a^2}{\frac{\sigma_v^2}{2\pi j}\oint \frac{dz}{z}\mathbf{H}^\dagger(z)\mathbf{H}(z)}$

$= \dfrac{\|\mathbf{H}\|^4\sigma_a^2}{\|\mathbf{H}\|^2\sigma_v^2} = \|\mathbf{H}\|^2\dfrac{\sigma_a^2}{\sigma_v^2} = \text{MFB}$

ST SU Receivers, White Noise: MLSE Reception

- Maximum Likelihood Sequence Estimation: either Viterbi algorithm for vector-valued signals:

$$\min_{\{a[k]\in\mathcal{A}\}} \sum_k \|\mathbf{y}[k] - \mathbf{H}(q)\, a[k]\|^2$$

  for FIR channel, channel output $\mathbf{H}(q)\, a[k]$ has a finite number $|\mathcal{A}|^N$ of possible values; from one symbol period to the next $N-1$ symbols (the *state*) in the channel memory are in common

- or equivalently, pass the Rx signal through a noise whitening MF

$$\mathbf{F}(z) \;=\; g^{-\dagger}(z)\mathbf{H}^\dagger(z)\;,\; g(z) = (\mathbf{H}^\dagger(z)\mathbf{H}(z))^{1/2}$$

  since

$$\sum_k \|\mathbf{y}[k]-\mathbf{H}(q)\, a[k]\|^2 = \sum_k \|\mathbf{F}(q)\,(\mathbf{y}[k]-\mathbf{H}(q)\, a[k])\|^2 = \sum_k \|\mathbf{F}(q)\,\mathbf{y}[k]-g(q)\, a[k])\|^2$$

  neglecting border effects ($\mathbf{F}(z)$ is allpass).
  $g(z)$ has the same memory length as $\mathbf{H}(z)$.

- Viterbi complexity $\sim |\mathcal{A}|^{N-1}$.

ST SU Receivers, White Noise: MLSE Reception (2)

- Relation of MFB to Maximum Likelihood Sequence Estimation performance:
  consider the simplified problem in which all symbols have been detected, presumably correctly, and remains to detect one symbol, w.l.o.g. $a[0]$:

$$\widehat{\widehat{a}}[0] = \arg \min_{a[0]\in\mathcal{A}} \sum_k \|\mathbf{y}[k] - \mathbf{h}[k]\, a[0]\|^2$$

  where $\mathbf{y}[k] = \mathbf{h}[k]\, a^o[0] + \mathbf{v}[k]$, $\forall k$, $a^o[0]$ = true symbol

$$\sum_k \|\mathbf{y}[k] - \mathbf{h}[k]\, a[0]\|^2 = \sum_k \|\mathbf{y}[k]\|^2 - \frac{|\sum_k \mathbf{y}^H[k]\, \mathbf{h}[k]|^2}{\sum_k \|\mathbf{h}[k]\|^2} + (\sum_k \|\mathbf{h}[k]\|^2)\, |a[0] - \widehat{a}[0]|^2$$

$$\Rightarrow\ \widehat{\widehat{a}}[0] = dec(\widehat{a}[0])\,,\ \widehat{a}[0] = \frac{\sum_k \mathbf{h}^H[k]\, \mathbf{y}[k]}{\sum_k \|\mathbf{h}[k]\|^2} = \arg\min_{a[0]} \sum_k \|\mathbf{y}[k] - \mathbf{h}[k]\, a[0]\|^2$$

- SNR: $\widehat{a}[0] = a^o[0] + \dfrac{\sum_k \mathbf{h}^H[k]\, \mathbf{v}[k]}{\sum_k \|\mathbf{h}[k]\|^2} \Rightarrow \text{SNR} = \frac{\sigma_a^2}{\sigma_v^2} \sum_k \|\mathbf{h}[k]\|^2 = \frac{\sigma_a^2}{\sigma_v^2} \|\mathbf{H}\|^2$

ST SU Receivers, White Noise: Linear Equalizers

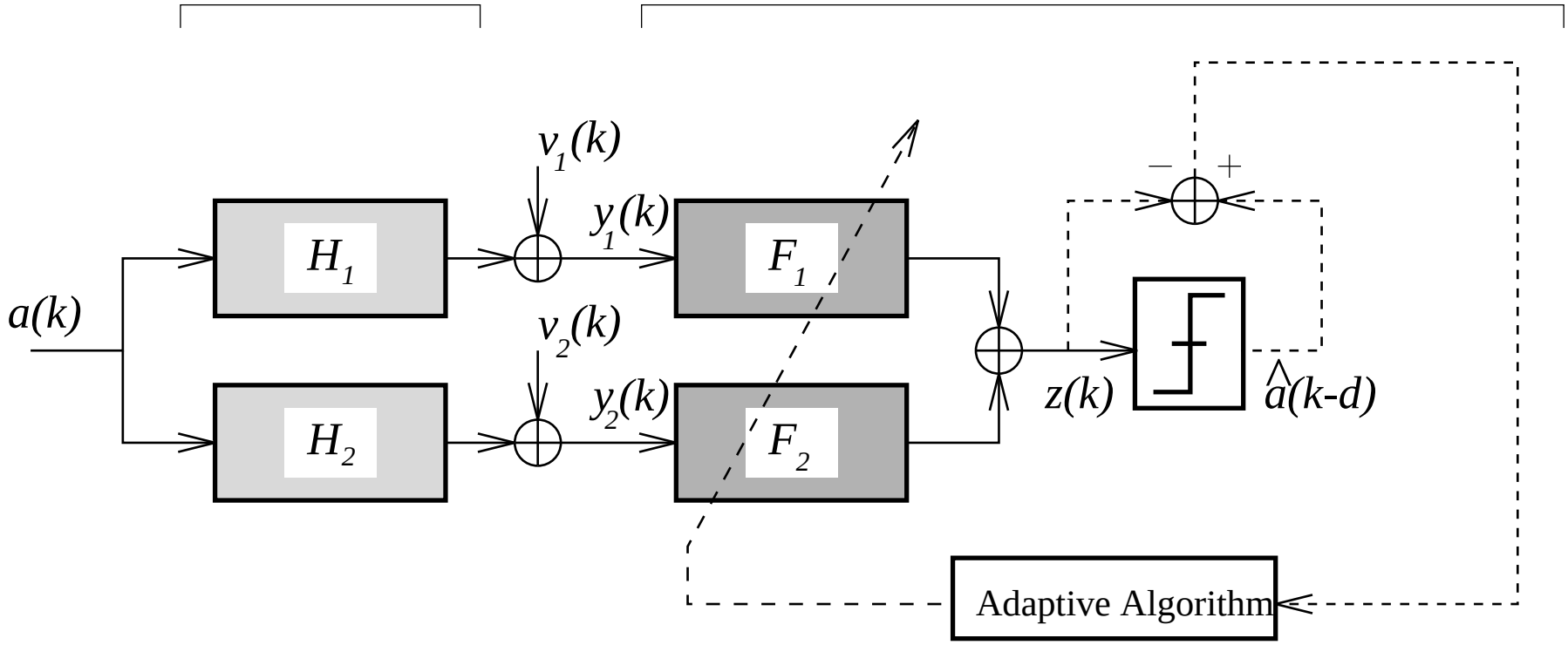

Single sub-channel case: $F_1(z) = \dfrac{1}{H_1(z)} = \underbrace{\dfrac{1}{H_1^{min-phase}(z)}}_{\text{IIR, causal}} \underbrace{\dfrac{1}{H_1^{max-phase}(z)}}_{\text{IIR, anti-causal}}$

$$C_{min}(z) = 1 - \frac{1}{2} z^{-1} \quad \left(= 0 \right.$$

$$|z| = \left|\frac{1}{2}\right| < 1$$

$$\frac{1}{1 - \frac{1}{2} z^{-1}} = \sum_{k=0}^{\infty} \left(\frac{1}{2}\right)^k z^{-k}$$

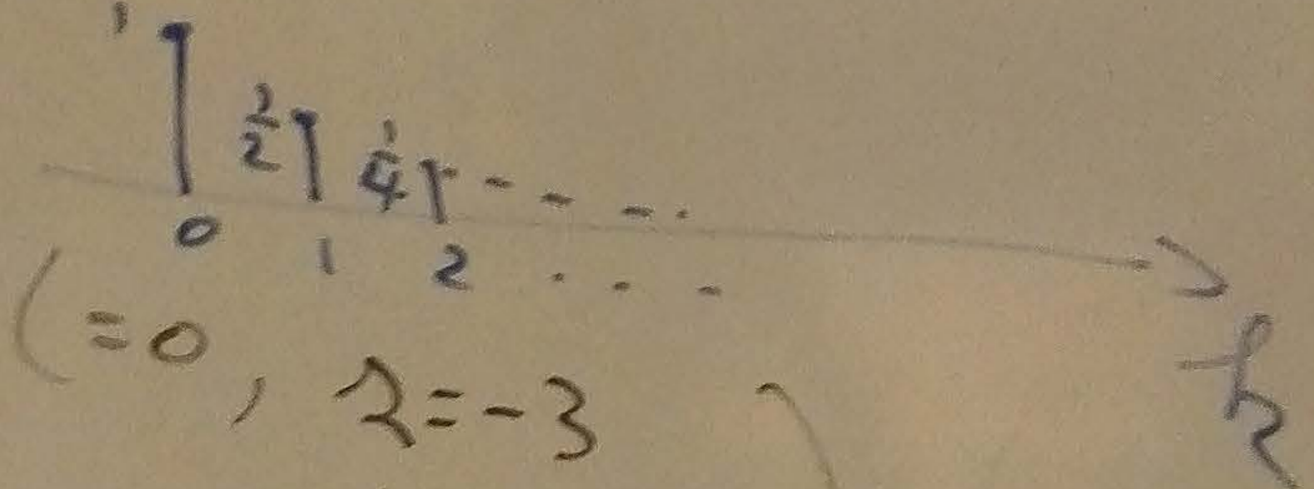

$$C_{max}(z) = 1 + 3 z^{-1}$$

$$\left(= 0, \quad z = -3 \right.$$

$$\left. |z| = 3 > 1 \right)$$

$$\frac{1}{1 + 3 z^{-1}} = \frac{\frac{1}{3} z}{\frac{1}{3} z + 1} = \frac{1}{3} z \sum_{k=0}^{\infty} \left(-\frac{1}{3}\right)^k z^{-k}$$

$$= -\sum_{k=1}^{\infty} \left(-\frac{1}{3}\right)^k z^{-k}$$

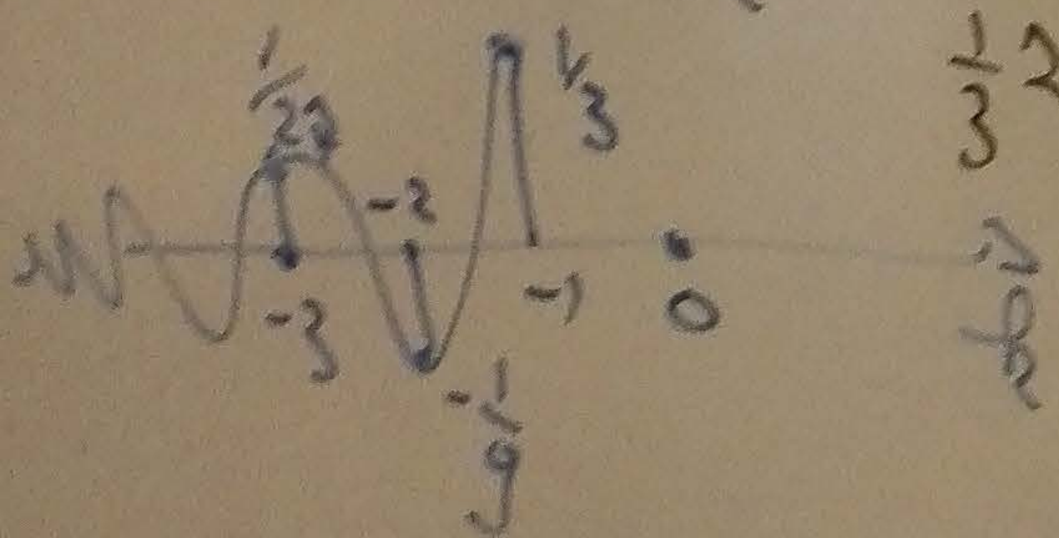

$$H_1(z) = H_1'(z)\,(1 - z_0 z^{-1})$$
$$H_2(z) = H_2'(z)\,(1 - z_0 z^{-1})$$

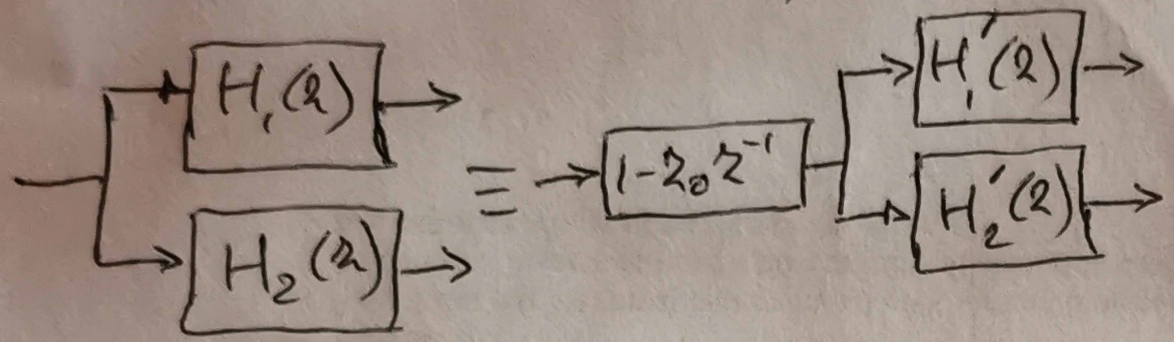

SISO case:

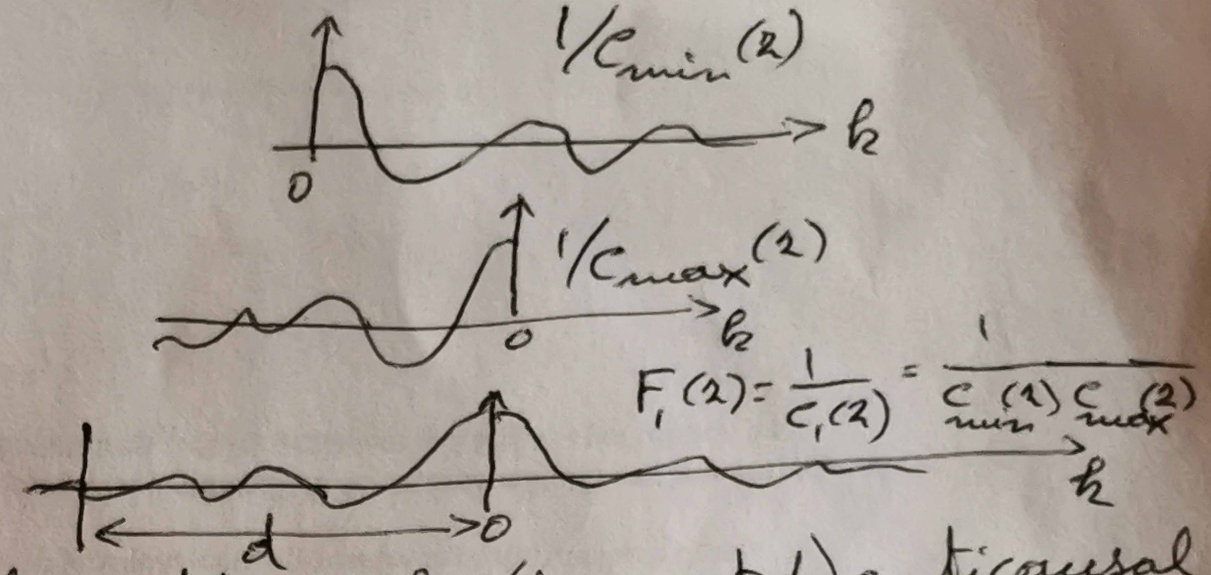

delayed to make (truncated) anticausal part causal.

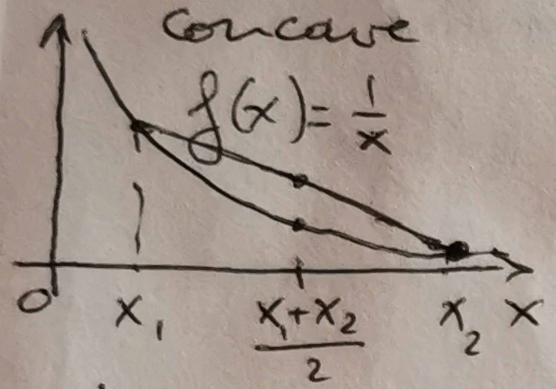

Jensen's inequality:

$$\langle f(x) \rangle \geq f(\langle x \rangle)$$

$\langle \cdot \rangle$: convex combination

If $f(\cdot)$ strictly concave: $=$ iff $x = \langle x \rangle$

$$SNR_{MMSE\text{-}ZF} \leq MFB:$$

$$x = \|\underline{H}(f)\|^2, \quad \langle \cdot \rangle = \int_{-\frac{1}{2}}^{\frac{1}{2}} df.$$

ST SU Receivers, White Noise: Linear Equalizers (2)

- ZF condition:

  $\mathbf{F}(z)\,\mathbf{H}(z) \;=\; F_1(z)\,H_1(z)+F_2(z)\,H_2(z) \;=\; z^{-d}\,,\; d \in \{0,1,\ldots,L+N-2\}$

  Bezout identity:

  FIR equalizer $\mathbf{F}(z)$ exists for FIR channel $\mathbf{H}(z)$ iff $\mathbf{H}(z) \neq 0\,, \forall z$

- ZFE condition in the time domain

$$[\mathbf{f}[0] \;\cdots\; \mathbf{f}[L-1]] \begin{bmatrix} \mathbf{h}[0] & \cdots & \mathbf{h}[N-1] & 0_{m\times 1} & \cdots & 0_{m\times 1} \\ 0_{m\times 1} & \mathbf{h}[0] & \cdots & \mathbf{h}[N-1] & \ddots & \vdots \\ \vdots & \ddots & \ddots & \ddots & \ddots & 0_{m\times 1} \\ 0_{m\times 1} & \cdots & 0_{m\times 1} & \mathbf{h}[0] & \cdots & \mathbf{h}[N-1] \end{bmatrix} = \begin{bmatrix} 0 \\ \vdots \\ 0 \\ 1 \\ 0 \\ \vdots \\ 0 \end{bmatrix}^T$$

mL unknowns $\geq L+N-1$ equations $\Rightarrow\; L \geq \frac{N-1}{m-1}$

ST SU Receivers, White Noise: Linear Equalizers (3)

- $\exists$ infinite number of ZF equalizers (of sufficient length):

  if $\mathbf{F}(z)$ is ZF, then so is (GSC parameterization, ICMF)

$$\mathbf{F}(z) + \mathbf{G}(z)\,\mathbf{H}^{\perp\dagger}(z)$$

  where $\mathbf{G}(z)$ $(1 \times (m-1))$ is arbitrary and $\mathbf{H}^{\perp}$ $(m \times (m-1))$ spans the orthogonal complement of the column space of $\mathbf{H}(z)$, $\forall z$: $\left\langle \mathbf{H}^{\perp}, \mathbf{H} \right\rangle_z = \mathbf{H}^{\perp\dagger}(z)\,\mathbf{H}(z) = 0\,, \forall z$, e.g. $m = 2$: $\mathbf{H}^{\perp\dagger}(z) = [-H_2(z) \;\; H_1(z)]$
  $\left\langle \boldsymbol{H}^{\perp}, \boldsymbol{H} \right\rangle_f = \boldsymbol{H}^{\perp H}(f)\,\boldsymbol{H}(f) = 0,\ \forall f.$

- among all the ZF equalizers without length constraint, the MMSE ZFE minimizes MSE and hence amplifies the noise the least: MSE = $\sigma_v^2 \int_{-0.5}^{0.5} ||\boldsymbol{F}^H||_f^2 df$, ZF: $\left\langle \boldsymbol{F}^H, \boldsymbol{H} \right\rangle_f = 1, \forall f$

$$\mathbf{F}_{MMSE\,ZF}(z) = (\mathbf{H}^{\dagger}(z)\mathbf{H}(z))^{-1}\mathbf{H}^{\dagger}(z)$$

- which is of infinite length (hence increasing length helps in reducing noise enhancement)

$$\text{SNR}_{MMSE\,ZF} = \frac{\sigma_a^2}{\sigma_v^2} \frac{1}{\frac{1}{2\pi j}\oint \frac{dz}{z}(\mathbf{H}^{\dagger}(z)\mathbf{H}(z))^{-1}} \leq \frac{\sigma_a^2}{\sigma_v^2}\frac{1}{2\pi j}\oint \frac{dz}{z}\mathbf{H}^{\dagger}(z)\mathbf{H}(z) = \text{MFB}$$

$$\text{SNR}_{MMSE\,ZF} = \frac{\sigma_a^2}{\sigma_v^2} \frac{1}{\int_{-0.5}^{0.5} ||\boldsymbol{H}||_f^{-2} df} \leq \frac{\sigma_a^2}{\sigma_v^2}\int_{-0.5}^{0.5} ||\boldsymbol{H}||_f^2 df = \text{MFB}$$

ST SU Receivers, White Noise: Linear Equalizers (4)

- crosscorrelation sequence: $r_{\mathbf{xy}}(n) = \mathrm{E}\,\mathbf{x}[k+n]\,\mathbf{y}^H[k]$
- cross spectral density function:

$$S_{\mathbf{xy}}(z) = \sum_{n=-\infty}^{\infty} r_{\mathbf{xy}}(n)\, z^{-n}\ ,\ \ r_{\mathbf{xy}}(n) = \frac{1}{2\pi j}\oint \frac{dz}{z}\, S_{\mathbf{xy}}(z)\, z^n$$

e.g. $S_{\mathbf{yy}}(z) = \sigma_a^2 \mathbf{H}(z)\mathbf{H}^\dagger(z) + \sigma_v^2 I_m$, $S_{a\mathbf{y}}(z) = \sigma_a^2 \mathbf{H}^\dagger(z)$, $S_{aa}(z) = \sigma_a^2$

- MMSE equalizer = Linear MMSE estimator (Wiener filter)
- $\mathbf{F}_{MMSE}(z) = S_{a\mathbf{y}}(z)\, S_{\mathbf{yy}}^{-1}(z) = (\mathbf{H}^\dagger(z)\mathbf{H}(z) + \frac{\sigma_v^2}{\sigma_a^2})^{-1}\mathbf{H}^\dagger(z)\ ,\ \boldsymbol{H}^H(f)\boldsymbol{H}(f) + \frac{\sigma_v^2}{\sigma_a^2} > 0$

$$\mathrm{SNR}_{MMSE}^{naive} = \frac{\sigma_a^2}{\sigma_v^2}\,\frac{1}{\frac{1}{2\pi j}\oint \frac{dz}{z}(\mathbf{H}^\dagger(z)\mathbf{H}(z) + \frac{\sigma_v^2}{\sigma_a^2})^{-1}} = \frac{\sigma_a^2}{MMSE}$$

ST SU Receivers, White Noise: Linear Equalizers (5)

- Unbiased MMSE equalizer

$$\mathbf{F}_{UMMSE}(z) = \frac{1}{\mathbf{F}_{MMSE}(q)\mathbf{H}(q)|_{[0]}}\mathbf{F}_{MMSE}(z) \;\Rightarrow\; \mathbf{F}_{UMMSE}(q)\mathbf{H}(q)|_{[0]} = 1$$

-

$$\mathrm{SNR}_{MMSE\,ZF} \leq \mathrm{SNR}_{UMMSE} = \mathrm{SNR}_{MMSE}^{naive} - 1 \leq \mathrm{MFB}$$

ST SU Receivers, White Noise: Decision-Feedback Equalizers

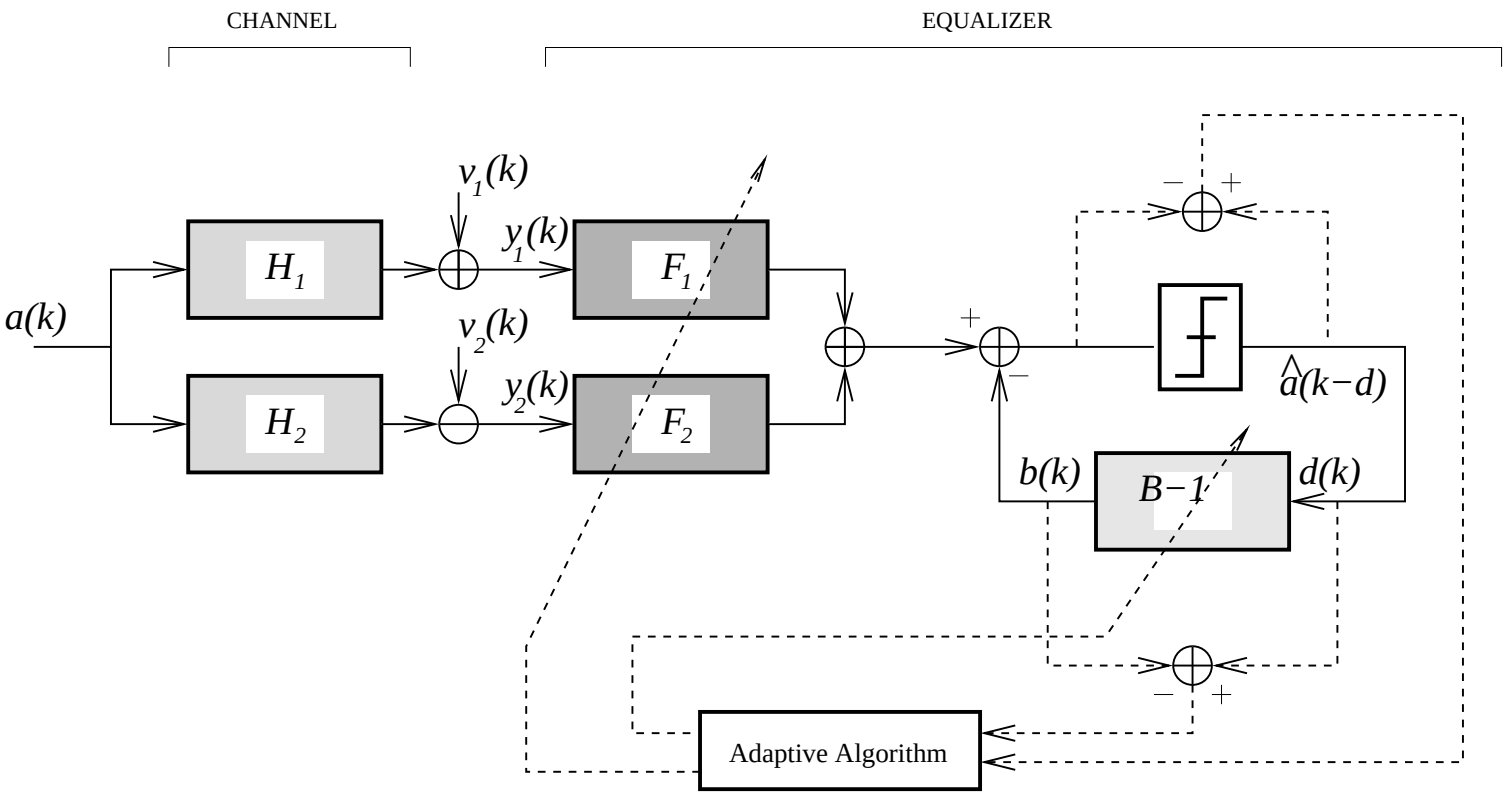

ST SU Receivers, White Noise: Predictive DFEs

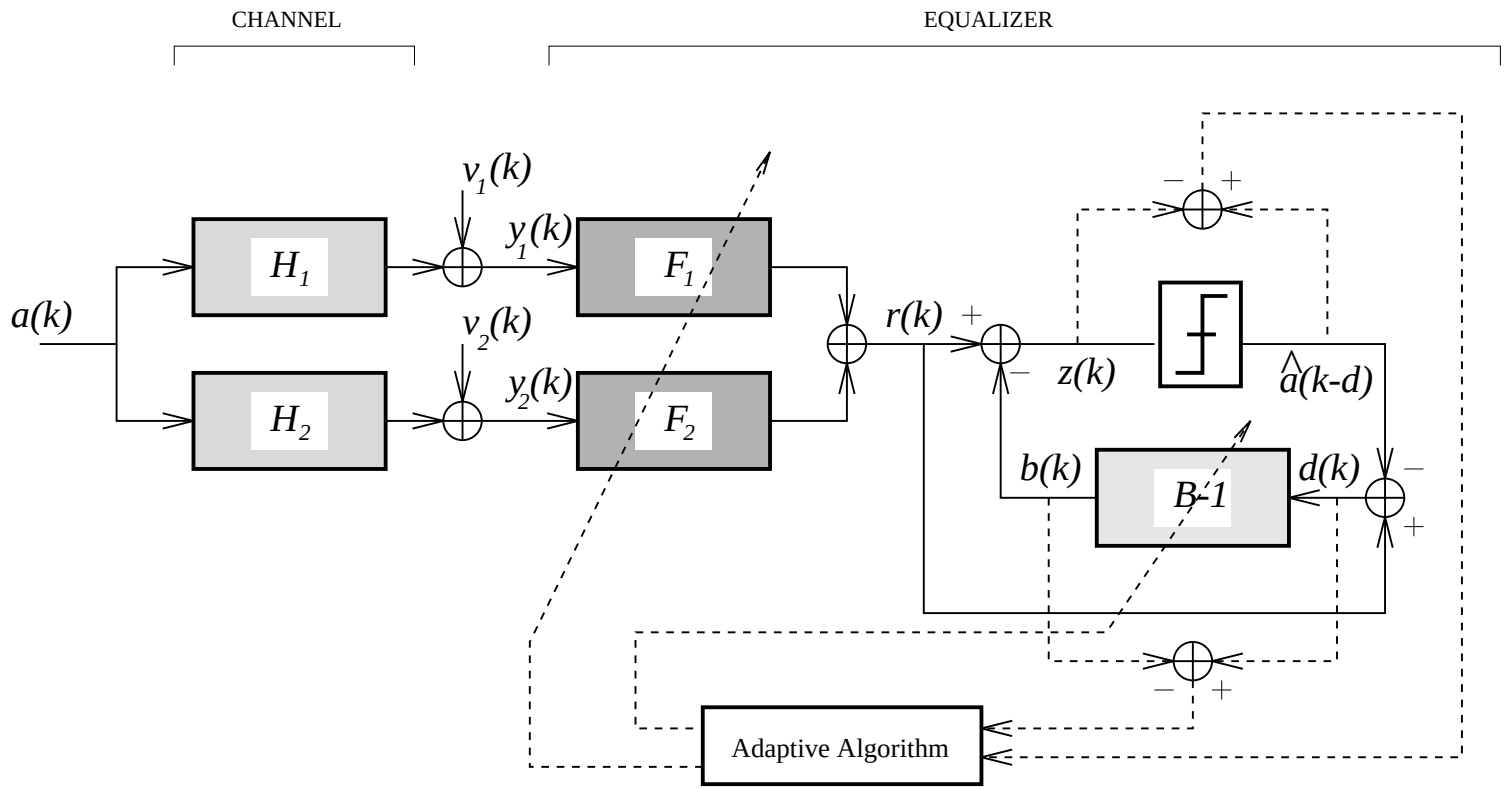

- Predictive Decision-Feedback Equalizer:
  infinite length MMSE solution: forward filter = linear MMSE equalizer
  backward filter $B(z) = (\mathbf{H}^\dagger(z)\mathbf{H}(z) + \frac{\sigma_v^2}{\sigma_a^2})^{\frac{1}{2}} / \left. (\mathbf{H}^\dagger(z)\mathbf{H}(z) + \frac{\sigma_v^2}{\sigma_a^2})^{\frac{1}{2}} \right|_{[0]}$
  (min-phase factor)

ST SU Receivers, White Noise: DFEs (2)

- **Predictive DFE**: reduce MSE from decision error signal variance to its prediction error variance

  $r[k]$: linear equalizer output (d = equalizer delay)
  $d[k] = r[k] - a[k-d]$: LMMSE decision error signal
  $b[k]$: prediction of $d[k] = r[k] - a[k-d]$
  $z[k] = r[k] - b[k] = a[k-d]$ + prediction error : decision element input

- **Usual DFE**: feedback of symbols instead of LMMSE decision error, brute symbol estimate based on Rx signal and past (detected) symbols:
  $\widehat{a}[k] = \mathbf{F}(q)\,\mathbf{y}[k] - (\mathbf{B}(q) - 1)\,a[k] = a[k] - \mathbf{B}(q)\,a[k] + \mathbf{F}(q)\,\mathbf{y}[k]$
  assuming past decisions correct, $\mathbf{B}(q)$ monic: $\mathbf{B}(q)|_{[0]} = 1$

  $\widetilde{a}[k] = a[k] - \widehat{a}[k] = \mathbf{B}(q)\,a[k] - \mathbf{F}(q)\,\mathbf{y}[k]$

DFE: $B(q) = \underbrace{1}_{B(q)|_{[0]}=1 \text{ : monic}} + b_1 q^{-1} + b_2 q^{-2} + \cdots$; $B(q) - 1 = b_1 q^{-1} + b_2 q^{-2} + \cdots$

$B(q)\, a[k] = b_1 a[k-1] + b_2 a[k-2] + \cdots$

strictly causal

$$\tilde{a}[k] = B(q)\, a[k] - F(q)\, y[k] = B(q)\, a[k] - B(q) \underbrace{F_L(q)\, y[k]}_{=\hat{a}_L[k]} = B(q)\underbrace{\left(a[k] - \hat{a}_L[k]\right)}_{=\tilde{a}_L[k]}$$

$$S_{\tilde{a}y}(z) = 0 = B(z) \underbrace{S_{ay}(z)}_{= S_{aa}(z) H^{+}(z)} - F(z) S_{yy}(z)$$

$S_{aa}(z) = \sigma_a^2$

$$\sigma_{\tilde{a}_L}^2 = \frac{\sigma_v^2}{\alpha} = \exp\left[\int_{-\frac{1}{2}}^{\frac{1}{2}} \ln\left(\frac{\sigma_v^2}{\|H(\xi)\|^2 + \frac{\sigma_v^2}{\sigma_a^2}}\right) d\xi\right]$$

geometric average: $\left(\prod_{i=1}^{N} \lambda_i\right)^{1/N} = e^{\frac{1}{N}\sum_{i=1}^{N} \ln \lambda_i}$, $x = e^{\ln x}$.

harmonic average: $= \dfrac{1}{\frac{1}{N}\sum_{i=1}^{N} \frac{1}{\lambda_i}} \leq \dfrac{1}{\frac{1}{N} \max_i \left\{\frac{1}{\lambda_i}\right\}} = N \lambda_{min}$

Matrix Spectrum factorization:

$$S(z) = L(z)\, D(z)\, L^{+}(z) = \underbrace{L(z)\, D^{1/2}(z)}\, \underbrace{D^{+/2}(z)\, L^{+}(z)} = S^{1/2}(z)\, S^{+/2}(z).$$

ST SU Receivers, White Noise: DFEs (3)

- orthogonality property of LMMSE:

$$S_{\widetilde{a}\mathbf{y}}(z) = 0 \;\Rightarrow\; S_{a\mathbf{y}}(z) = S_{\widehat{a}\mathbf{y}}(z) \;\Rightarrow\; \sigma_a^2 \mathbf{B}(z)\mathbf{H}^\dagger(z) = \mathbf{F}(z) S_{\mathbf{yy}}(z)$$

$$\Rightarrow\; \mathbf{F}(q) = \mathbf{B}(q)\,\sigma_a^2 \mathbf{H}^\dagger(q) S_{\mathbf{yy}}^{-1}(q) = \mathbf{B}(q)\,\mathbf{F}_{LMMSE}(q)$$

$$\Rightarrow\; \widetilde{a}[k] = \mathbf{B}(q)\,(a[k] - \widehat{a}_{LMMSE}[k]) \;\;,\;\; \widehat{a}_{LMMSE}[k] = \mathbf{F}_{LMMSE}(q)\,\mathbf{y}[k]$$

- $\widetilde{a}_{DFMMSE}[k] = \mathbf{B}(q)\,(a[k] - \widehat{a}_{LMMSE}[k]) = \mathbf{B}(q)\,\widetilde{a}_{LMMSE}[k]$

- $$\widetilde{a}_{LMMSE}[k] = a[k] - \widehat{a}_{LMMSE}[k] = \frac{\frac{\sigma_v^2}{\sigma_a^2}\,a[k] - \mathbf{H}^\dagger(q)\,\mathbf{v}[k]}{\mathbf{H}^\dagger(q)\mathbf{H}(q) + \frac{\sigma_v^2}{\sigma_a^2}}$$

$$S_{\widetilde{a}_{LMMSE}\widetilde{a}_{LMMSE}}(z) = \frac{\sigma_v^2\,(\frac{\sigma_v^2}{\sigma_a^2} + \mathbf{H}^\dagger(z)\mathbf{H}(z))}{(\mathbf{H}^\dagger(z)\mathbf{H}(z) + \frac{\sigma_v^2}{\sigma_a^2})^2} = \frac{\sigma_v^2}{\mathbf{H}^\dagger(z)\mathbf{H}(z) + \frac{\sigma_v^2}{\sigma_a^2}}$$

- MMSE DFE: let $\mathbf{H}^\dagger(z)\mathbf{H}(z) + \frac{\sigma_v^2}{\sigma_a^2} = \alpha\, g(z)\, g^\dagger(z),\; \alpha > 0,\; g(z)$ monic

ST SU Receivers, White Noise: MMSE DFE

- $S_{\widetilde{a}_{DFMMSE}}(z) = \mathbf{B}(z)\, S_{\widetilde{a}_{LMMSE}}(z)\mathbf{B}^\dagger(z) = \dfrac{\sigma_v^2\, \mathbf{B}(z)\, \mathbf{B}^\dagger(z)}{\alpha\, g(z)\, g^\dagger(z)} = \dfrac{\sigma_v^2}{\alpha} = \sigma^2_{\widetilde{a}_{DFMMSE}}$ for
  $\mathbf{B}(q) = g(q) = (\mathbf{H}^\dagger(q)\mathbf{H}(q) + \frac{\sigma_v^2}{\sigma_a^2})^{\frac{1}{2}} / \left. (\mathbf{H}^\dagger(q)\mathbf{H}(q) + \frac{\sigma_v^2}{\sigma_a^2})^{\frac{1}{2}} \right|_{[0]}$
  $(S(z))^{\frac{1}{2}}$ = minimum-phase (causal) spectral factor
  $\mathbf{B}(z)$ = prediction error filter for $\widetilde{a}_{LMMSE}[k]$ and $\widetilde{a}_{DFMMSE}[k]$ = white
- MMSE $= \sigma^2_{\widetilde{a}_{DFMMSE}} = \exp\left[\frac{1}{2\pi j} \oint \frac{dz}{z} \ln\left(\sigma_v^2\, (\mathbf{H}^\dagger(z)\mathbf{H}(z) + \frac{\sigma_v^2}{\sigma_a^2})^{-1}\right)\right]$
- short-cut intuitive derivation:

$$\widehat{a}_{LMMSE}[k] = \frac{1}{\alpha\, g(q)\, g^\dagger(q)} \mathbf{H}^\dagger(q)\, (\mathbf{H}(q)\, a[k] + \mathbf{v}[k])$$

$$\Rightarrow \quad \underbrace{g(q)}_{\mathbf{B}_{DF\,MMSE}(q)} \quad \widehat{a}[k] = \underbrace{\frac{1}{\alpha\, g^\dagger(q)} \mathbf{H}^\dagger(q)}_{\mathbf{F}_{DF\,MMSE}(q)}\, (\mathbf{H}(q)\, a[k] + \mathbf{v}[k])$$

- $\Rightarrow$ $\mathbf{F}_{DF\,MMSE}(q)$ "shorter" than $\mathbf{F}_{LMMSE}(q) = \mathbf{F}_{PDF\,MMSE}(q)$

ST SU Receivers, White Noise: MMSE DFE (2)

- Unbiased MMSE DFE: scale forward filter $\mathbf{F}(q)$ and backward filter $\mathbf{B}(q)-1$ to obtain $\mathbf{F}(q)\mathbf{H}(q)|_{[0]} = 1$

- MMSE ZF DFE: put $\sigma_v^2 = 0$ in MMSE solution.
  $\mathbf{F}_{DF\,MMSE\,ZF}(q) = \text{WMF}$

SINRs of various (∞-length) ST SU Receivers

- $\text{MFB} = \frac{\sigma_a^2}{\sigma_v^2} \int_{-\frac{1}{2}}^{\frac{1}{2}} \left\| \mathbf{H}(e^{j2\pi f}) \right\|^2 df \; = \frac{\sigma_a^2}{\sigma_v^2} \int_{-\frac{1}{2}}^{\frac{1}{2}} (\left\| \mathbf{H}(e^{j2\pi f}) \right\|^2 + \epsilon \frac{\sigma_v^2}{\sigma_a^2}) df \; - \epsilon$

  arithmetic average

- $$\epsilon = \begin{cases} 0 & \text{, MMSE ZF design} \\ 1 & \text{, MMSE design} \end{cases}$$

- $\text{SINR}_{DFE}^{\epsilon} = \frac{\sigma_a^2}{\sigma_v^2} \; \exp \left[\int_{-\frac{1}{2}}^{\frac{1}{2}} \ln(\left\| \mathbf{H}(e^{j2\pi f}) \right\|^2 + \epsilon \frac{\sigma_v^2}{\sigma_a^2}) \, df \right] \; - \epsilon$

  geometric average

- $\text{SINR}_{LE}^{\epsilon} = \frac{\sigma_a^2}{\sigma_v^2} \left[\int_{-\frac{1}{2}}^{\frac{1}{2}} (\left\| \mathbf{H}(e^{j2\pi f}) \right\|^2 + \epsilon \frac{\sigma_v^2}{\sigma_a^2})^{-1} \, df \right]^{-1} \; - \epsilon$

  harmonic average

- $\text{SINR}_{LE}^{\epsilon} \; \leq \; \text{SINR}_{DFE}^{\epsilon} \; \leq \; \text{MFB} \;, \qquad \text{SINR}^{MMSEZF} \; \leq \; \text{SINR}^{MMSE}$

  for either Linear (LE) or Decision-Feedback (DFE) Equalizer

- SINR^{MMSE} refers to SINR for MMSE calculated correctly, or Unbiased MMSE.

Outage-Rate Tradeoff

- probability of: symbol error, bit error, packet error
- outage probability:
  outage = instantaneous mutual information < rate
- Additive White Gaussian Noise (AWGN) channel:
  $P_e \sim e^{-\mathrm{SNR}}$ ($Q(.)$ function tail)
- fading channel: $P_e = \mathrm{E}_{channel}\mathrm{Prob}(error|channel)$
- normalized SINR γ , SINR $= \rho\,\gamma$
- dominating term in Taylor series of cdf of γ:
  $\mathrm{Prob}\{\gamma \leq \epsilon\} = c\,\epsilon^k$ for small $\epsilon > 0$
- outage probability $\mathrm{Prob}\{\mathrm{SINR} \leq \alpha\} = c\left(\frac{\alpha}{\rho}\right)^k = \left(\frac{\alpha}{g\,\rho}\right)^k$
  k = diversity order, $g = c^{-1/k}$ = coding gain (reduction in SNR required for identical outage probability)
- suboptimal Rx (LE, DFE): channel-equalizer cascade = AWGN channel with Mutual Information $\mathrm{C} = \log(1 + \mathrm{SINR})$

Outage-Rate Tradeoff (2)

- at high SNR ρ, $C = \log(1 + \text{SINR}) \approx \log \rho$
- Using Adaptive Modulation and Coding consider taking a fraction r of the capacity:
  rate $R = r \log \rho$ (nats), $r \in [0, 1]$ is the normalized rate.
- Then the outage probability at high SNR is

$$
\begin{aligned}
P_o &= \text{Prob}\{C < R\} = \text{Prob}\{\log(1 + \text{SINR}) < \log(\rho^r)\} \\
&= \text{Prob}\{\rho\gamma < \rho^r - 1\} = \text{Prob}\{\gamma < \tfrac{1}{\rho^{(1-r)}} - \tfrac{1}{\rho}\} \\
&= \text{Prob}\{\gamma < \tfrac{1}{\rho^{(1-r)}}\}\ , \text{ for } r > 0 \\
&= c\,\frac{1}{\rho^{(1-r)k}} = \frac{1}{(g\,\rho)^{(1-r)k}}
\end{aligned}
$$

Outage-Rate Tradeoff (3)

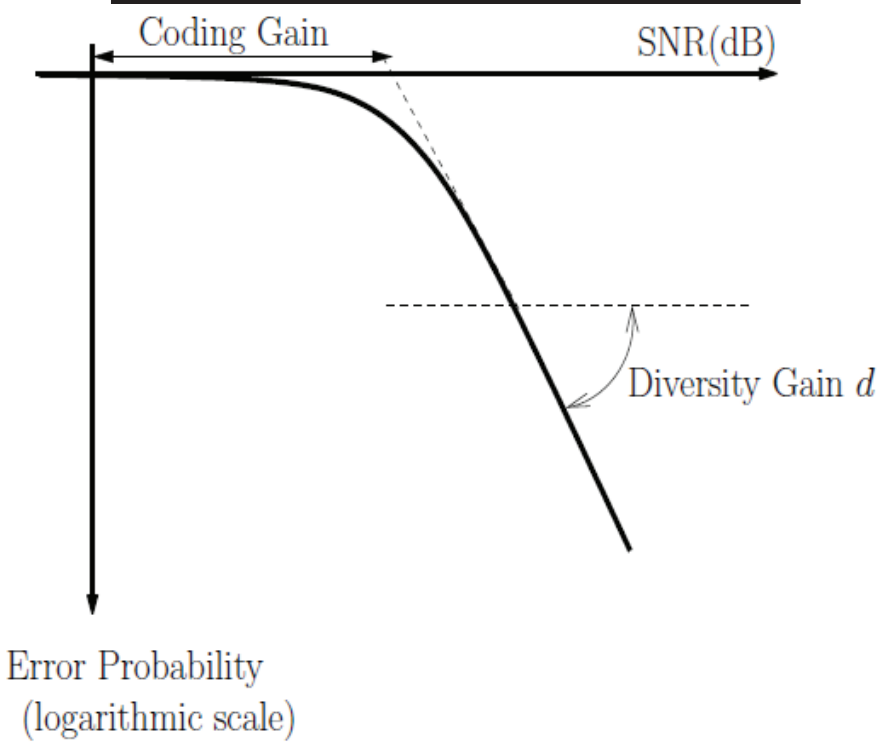

- Hence for $r \in (0, 1]$:

$$d(r) = (1 - r)\, k \quad , \quad g(r)(\text{dB}) = -\frac{10}{(1 - r)k} \log_{10} c$$

$d(r)$ = diversity(order)-rate tradeoff,

$g(r)$ = tradeoff dependent coding gain.

The case $r = 0$ (fixed rate) requires separate investigation.

Outage-Rate Tradeoff (4)

- $\text{MFB} = \frac{\sigma_a^2}{\sigma_v^2} \int_{-\frac{1}{2}}^{\frac{1}{2}} \left\| \mathbf{H}(e^{j2\pi f}) \right\|^2 df \; = \frac{\sigma_a^2}{\sigma_v^2} \int_{-\frac{1}{2}}^{\frac{1}{2}} (\left\| \mathbf{H}(e^{j2\pi f}) \right\|^2 + \epsilon \frac{\sigma_v^2}{\sigma_a^2}) df \; - \epsilon$

  arithmetic average

- $\text{SINR}_{DFE}^{\epsilon} = \frac{\sigma_a^2}{\sigma_v^2} \; \exp \left[\int_{-\frac{1}{2}}^{\frac{1}{2}} \ln(\left\| \mathbf{H}(e^{j2\pi f}) \right\|^2 + \epsilon \frac{\sigma_v^2}{\sigma_a^2}) \, df \right] \; - \epsilon$

  geometric average

- $\text{SINR}_{LE}^{\epsilon} = \frac{\sigma_a^2}{\sigma_v^2} \left[\int_{-\frac{1}{2}}^{\frac{1}{2}} (\left\| \mathbf{H}(e^{j2\pi f}) \right\|^2 + \epsilon \frac{\sigma_v^2}{\sigma_a^2})^{-1} \, df \right]^{-1} \; - \epsilon$

  harmonic average

- diversity order

$$k = d(0) = \begin{cases} = mN & , \text{ MFB} \\ = m & , \text{ LE, all frequency-selective diversity lost} \\ = mN & , \text{ DFE} \\ = mL & , \text{ DFE w FB filter } B \text{ of order } L \end{cases}$$

ST SU Receivers, Colored Noise

- colored noise: $\sigma_v^2 I_m \;\rightarrow\; S_{\mathbf{vv}}(z)$ $\qquad S(z) = \underbrace{S^{1/2}(z)}_{\text{min. phase}} \; \underbrace{S^{\dagger/2}(z)}_{\text{max. phase}}$

- reduce colored noise case to white noise case by

$$\begin{aligned} \mathbf{y}'[k] &= S_{\mathbf{vv}}^{-1/2}(q)\,\mathbf{y}[k] \\ \mathbf{H}'(q) &= S_{\mathbf{vv}}^{-1/2}(q)\,\mathbf{H}(q) \\ \sigma_{v'}^2 &= 1 \end{aligned}$$

  yielding $\mathbf{y}'[k] = \mathbf{H}'(q)\,a[k] + \mathbf{v}'[k]$

  and $S_{\mathbf{vv}}(z) = S_{\mathbf{vv}}^{1/2}(z)\,S_{\mathbf{vv}}^{\dagger/2}(z)$

- in particular, colored noise MF

$$\mathbf{F}_{MF}(q) \;=\; \mathbf{H}^{\dagger}(q)\,S_{\mathbf{vv}}^{-1}(q) \;\text{ since }\; \mathbf{F}\,\mathbf{y} = \mathbf{H}'^{\dagger}\mathbf{y}'$$

Proportionality of MMSE and UMMSE Rx's

- in general: $\widehat{a} = \mathbf{f}\,\mathbf{Y}$

  $\mathbf{Y}$ = vector containing all samples $\mathbf{y}$ involved in the estimation of a

  Remark:

  1. Let dimensions $\rightarrow\ \infty$ for ∞ length filters
  2. Can include DFE also:

$$\mathbf{F}(q)\,\mathbf{y}[k] \ \rightarrow\ \mathbf{F}^{'}(q)\,\mathbf{y}^{'}[k] = [\mathbf{F}(q)\ 1{-}\mathbf{B}(q)] \begin{bmatrix} \mathbf{y}[k] \\ a[k] \end{bmatrix} \text{ or } \mathbf{Y} \rightarrow \mathbf{Y}^{'} = \begin{bmatrix} \mathbf{Y} \\ \mathbf{A} \end{bmatrix}$$

Proportionality of MMSE and UMMSE Rx's (2)

- $\mathbf{Y} = \mathbf{h}\, a + \widetilde{\mathbf{Y}}$, $\mathbf{h}\, a$ = LMMSE estimate of $\mathbf{Y}$ in terms of a (white!), with estimation error $\widetilde{\mathbf{Y}}$ containing other symbols and noise (uncorrelated!)
- $\widetilde{a} = a - \mathbf{f}\mathbf{Y} = (1 - \mathbf{f}\mathbf{h})\, a - \mathbf{f}\widetilde{\mathbf{Y}}$
- MSE $= \sigma_a^2 |1 - \mathbf{f}\mathbf{h}|^2 + \mathbf{f}\, R_{\widetilde{\mathbf{Y}}\widetilde{\mathbf{Y}}}\, \mathbf{f}^H \;=\; \sigma_a^2 |1 - \mathbf{f}'\mathbf{h}'|^2 + \|\mathbf{f}'\|^2$

  where $\mathbf{f}' = \mathbf{f}\, R^{\frac{1}{2}}_{\widetilde{\mathbf{Y}}\widetilde{\mathbf{Y}}}$, $\mathbf{h}' = R^{-\frac{1}{2}}_{\widetilde{\mathbf{Y}}\widetilde{\mathbf{Y}}}\, \mathbf{h}$
- MMSE $\Rightarrow\; \mathbf{f}' \sim \mathbf{h}'^{\,H} \;\Rightarrow\; \mathbf{f} \sim \mathbf{h}^H R^{-1}_{\widetilde{\mathbf{Y}}\widetilde{\mathbf{Y}}}$
- UMMSE : $\mathbf{f}\mathbf{h} = 1 = \mathbf{f}'\mathbf{h}' \;\Rightarrow\; \mathbf{f}' \sim \mathbf{h}'^{\,H}$ also

  $\Rightarrow\; \mathbf{f}_{UMMSE} = \alpha\, \mathbf{f}_{MMSE}$ s.t. $\alpha\, \mathbf{f}_{MMSE}\mathbf{h} = 1 \;\Rightarrow\; \alpha = \frac{1}{\mathbf{f}_{MMSE}\mathbf{h}}$
- $\mathbf{h}^H R^{-1}_{\widetilde{\mathbf{Y}}\widetilde{\mathbf{Y}}} \sim \mathbf{h}^H R^{-1}_{\mathbf{Y}\mathbf{Y}}$ since $R_{\mathbf{Y}\mathbf{Y}} = \underbrace{\sigma_a^2\, \mathbf{h}\mathbf{h}^H}_{\text{rank } 1} + R_{\widetilde{\mathbf{Y}}\widetilde{\mathbf{Y}}}$

Spatio-Temporal Channel Diversity Analysis

Monte Carlo simulations with

- uniform linear array with $\frac{\lambda}{2}$ antenna spacings
- path delays uniformly distributed over a given delay spread
- path angles: Gaussian with angular spread
- path amplitudes: Rayleigh with constant power profile
- analyze Matched Filter Bound (MFB) and SNR for (MMSE) ZF and MMSE linear receivers

MFB, ZF, MMSE: 1 antenna

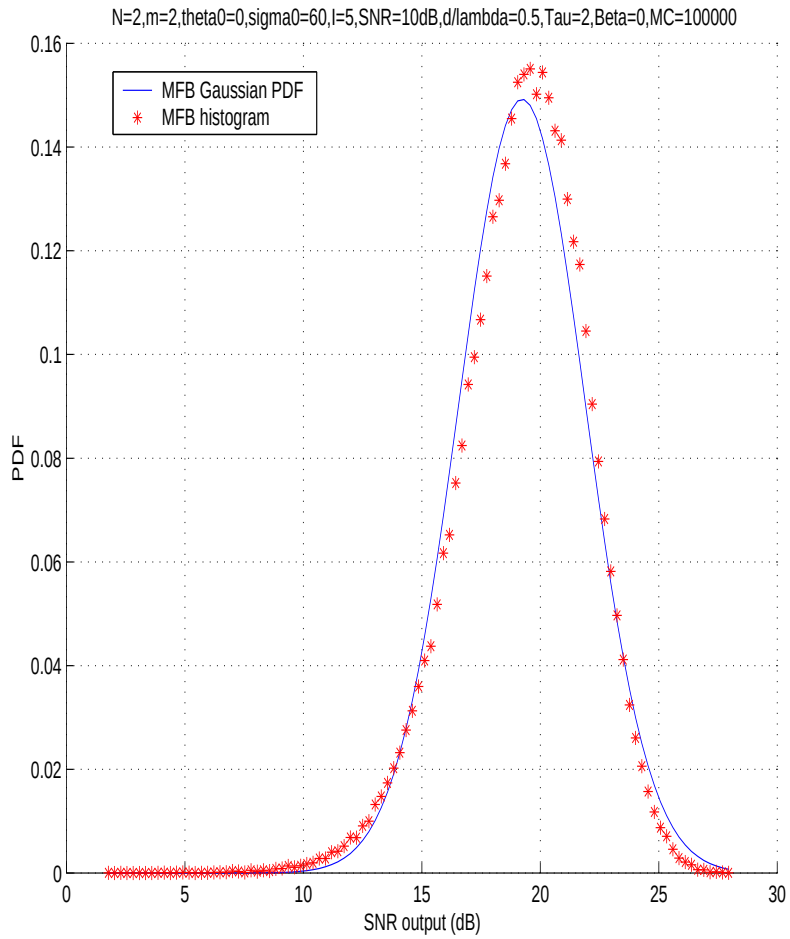

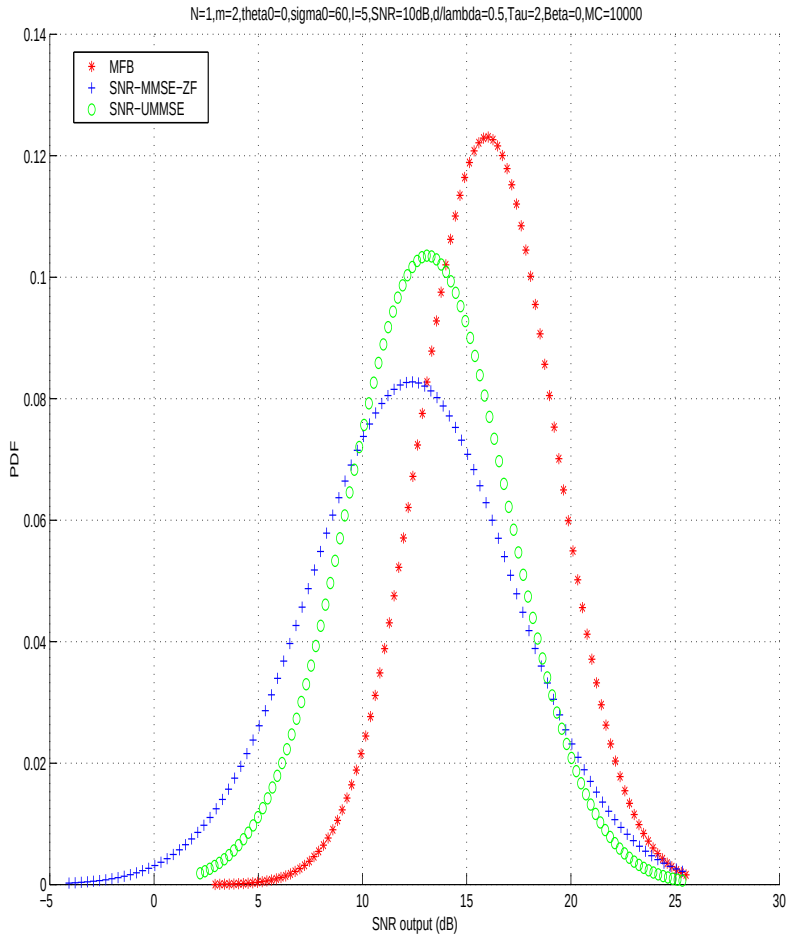

MFB, ZF, MMSE: 2,4 antennas

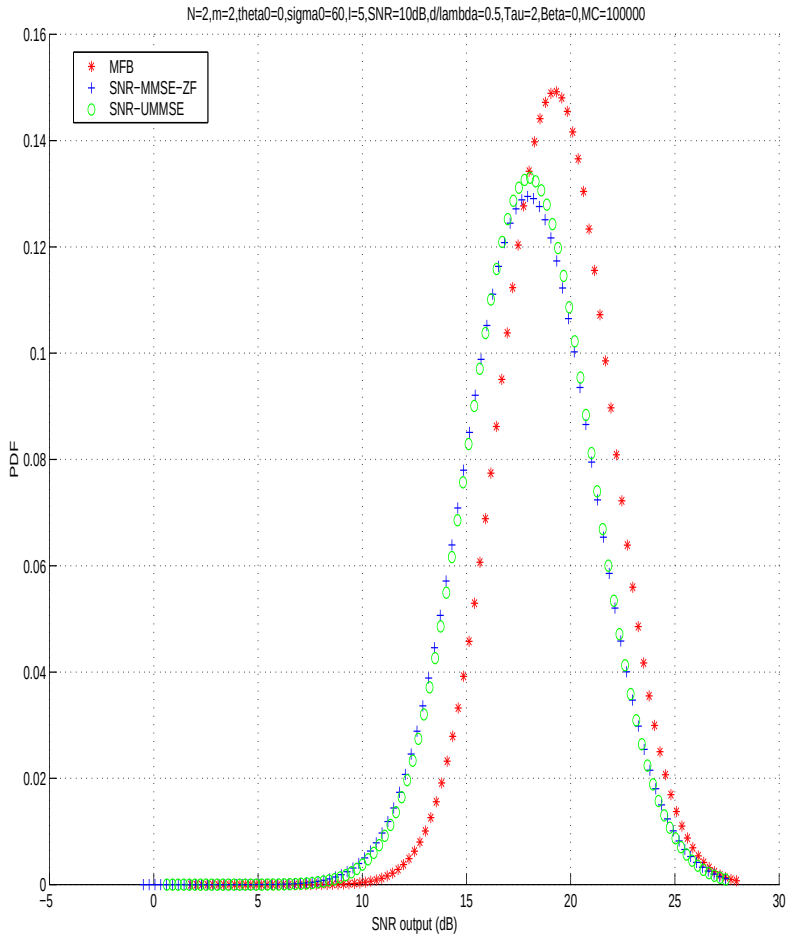

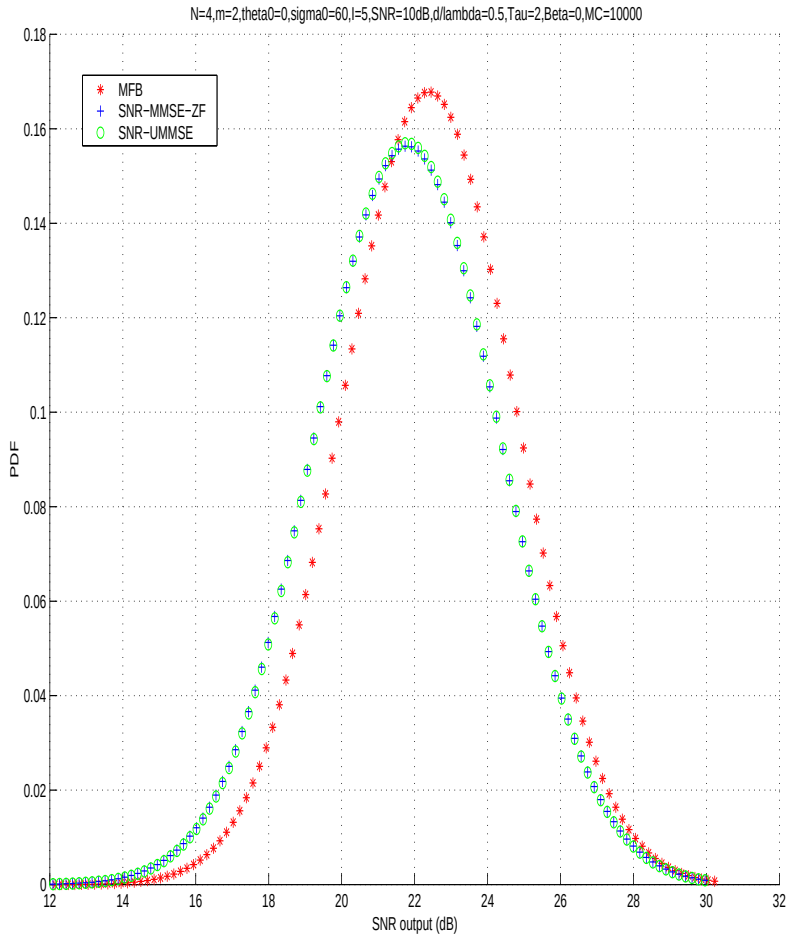

MMSE: 1,2,4 ant; 1°, 60° angle spread

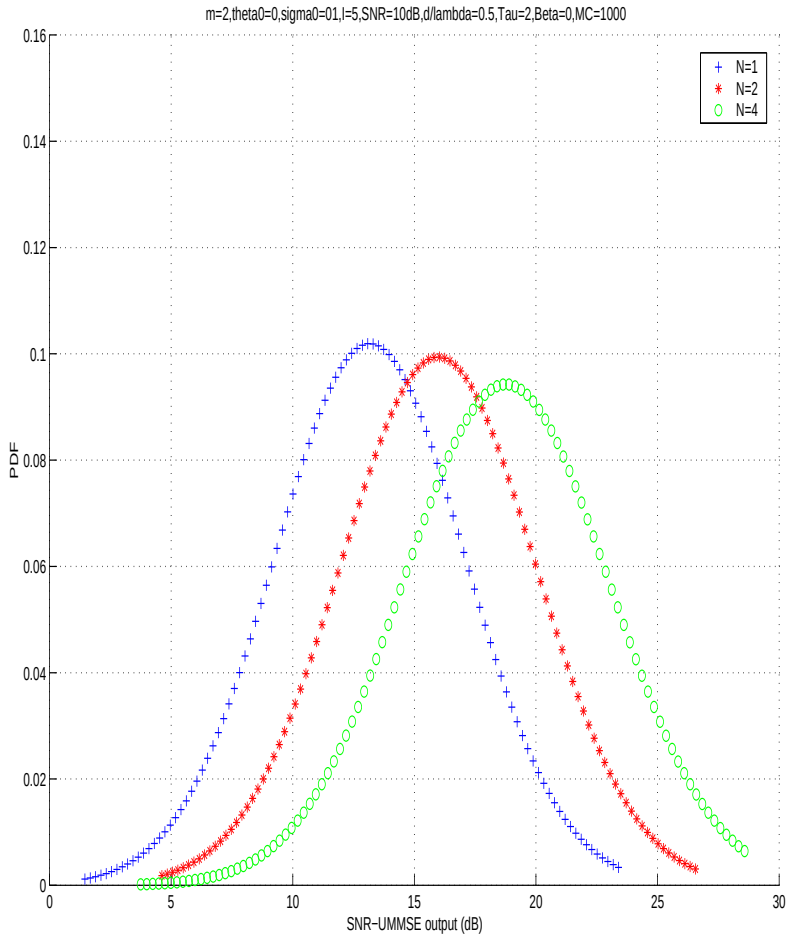

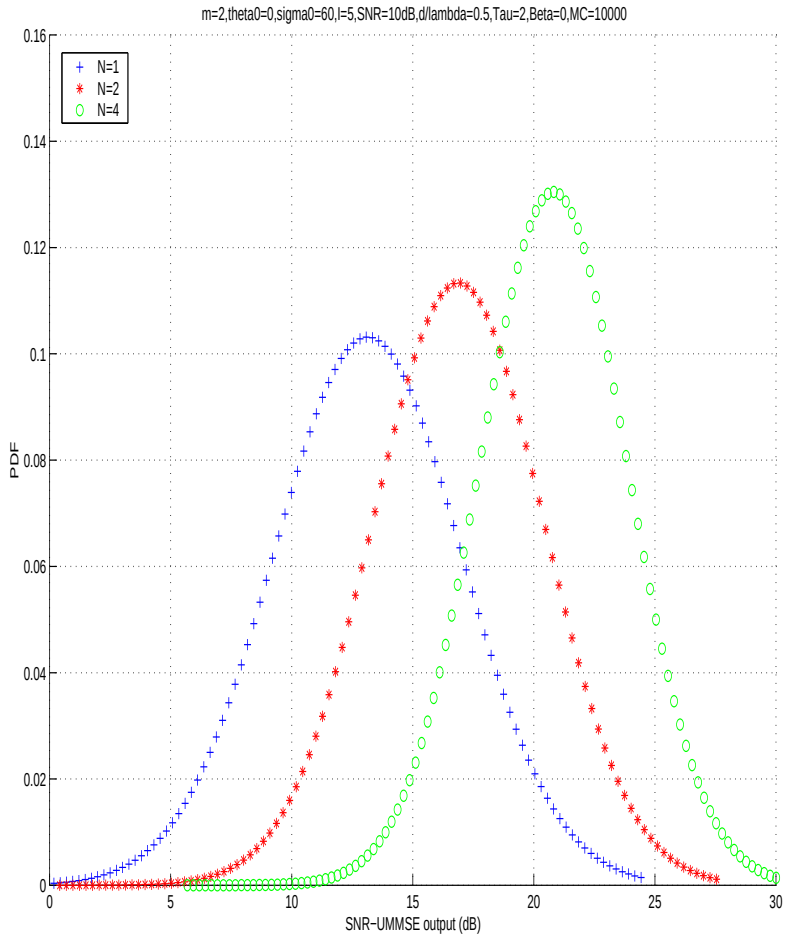

Conclusions from Diversity Analysis

- SNR asymptotically normally distributed as diversity degree $\rightarrow \infty$
- as number of antennas increases: ZF and MMSE RX performance very close, and close to MFB: suboptimality of linear RX decreases
- as diversity degree increases, standard deviation of SNR distribution decreases $\Rightarrow$ outage probability decreases
- diversity benefit from multiple antennas depends on angular multipath spread

Beamforming (Spatial) vs Spatio-Temporal Processing

- (accurate) beamforming requires a large number of antennas
- beamforming does not necessarily exploit angular diversity (multiple angles in multipath)
- spatio-temporal processing exploits spatial diversity, can be done meaningfully with any number of antennas