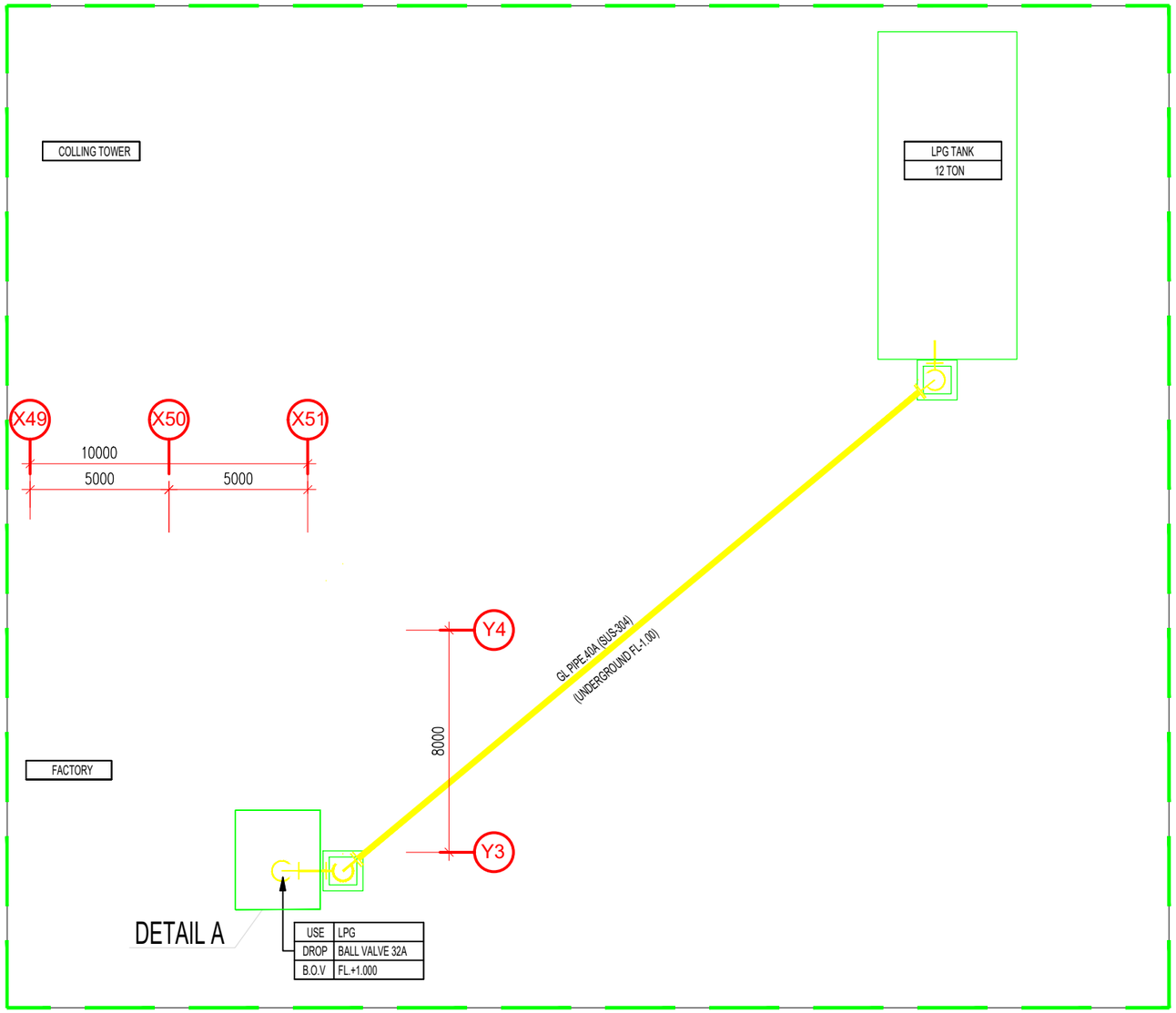

1 **HỆ THỐNG LPG CHO NHÀ MÁY**
LPG SYSTEM FOR FACTORY 1:200

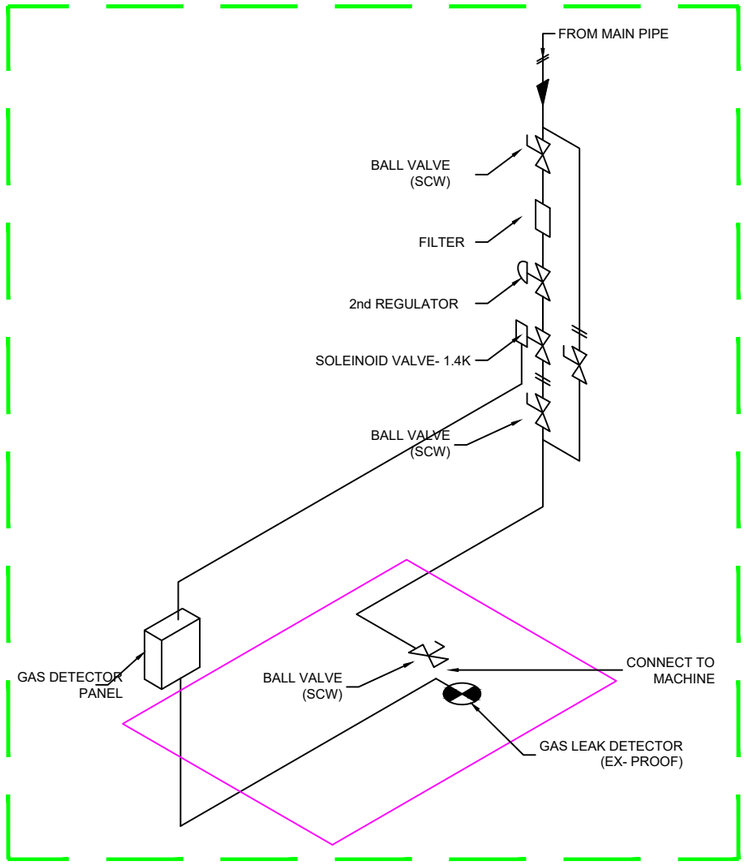

DETAIL A
CUSTOM REGULATOR SKID

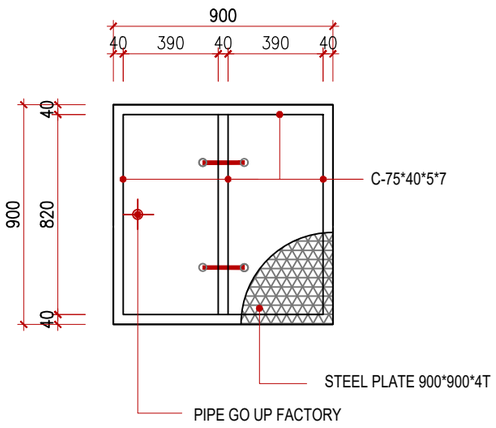

- COVER DETAIL
CHI TIẾT NẮP GA 1:25

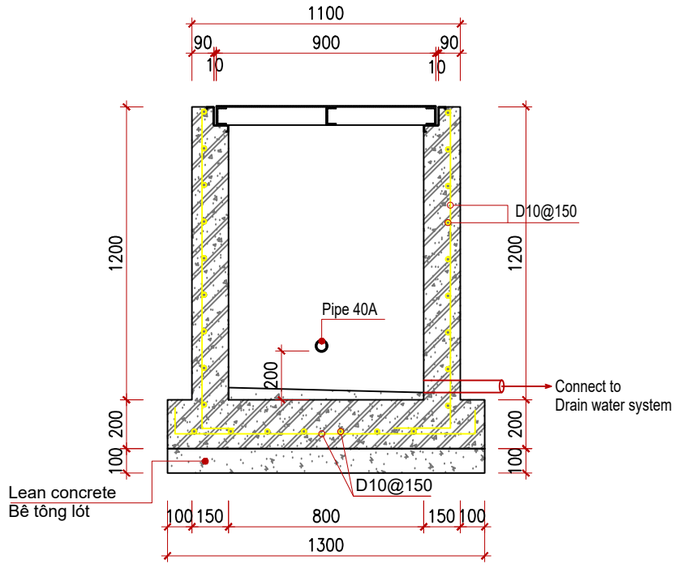

- MANHOLE DETAIL
CHI TIẾT HỐ GA 1:25

KEY PLAN:

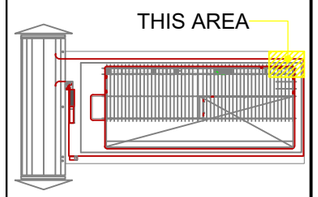

NOTE:

PROJECT:
LS METAL VINA FACTORY
NHÀ MÁY LS METAL VINA

OWNER:
LS METAL VINA LLC
ADD : NAM DINH VU II INDUSTRIAL PARK, HAI AN DISTRICT
HAI PHONG CITY, VIETNAM
TEL: ..... FAX: .....

AD ARCHITECTURE CO., LTD
ADD: B79 HAN THUYEN ST, AN HUY URBAN,
VU NINH WARD, BAC NINH PROVINCE
TEL: 0241 381 3535 FAX: 0241 381 3536

DIRECTOR Jung Ji Wook	
CHIEF OF DESIGN Nguyen Duc Quy	
CHECKER BY Nguyen Van Thao	
DESIGN BY Phan Van Tung	

PHẦN CƠ
MECHANICAL

HỆ THỐNG LPG CHO NHÀ MÁY
LPG SYSTEM FOR FACTORY

SCALE	1/200	DRAWING NO
STATUS		00-M-LPG-102
DATE		