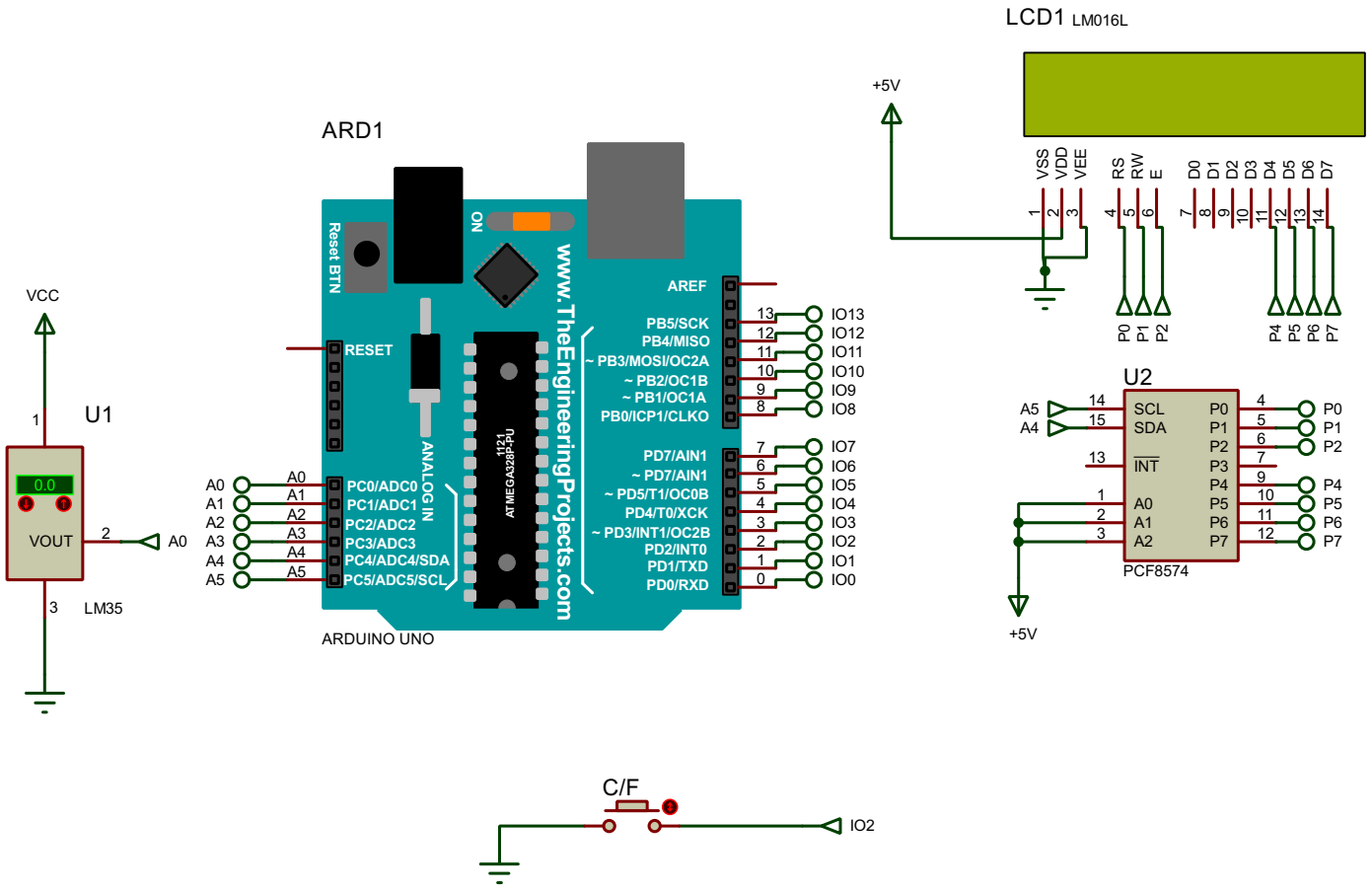
LCD1 LM016L
+5V
VSS
VDD
VEE
RS
RW
E
D0
D1
D2
D3
D4
D5
D6
D7
P0
P1
P2
P4
P5
P6
P7
ARD1
Reset BTN
ON
RESET
AREF
PB5/SCK
PB4/MISO
~ PB3/MOSI/OC2A
~ PB2/OC1B
~ PB1/OC1A
PB0/ICP1/CLKO
PD7/AIN1
~ PD7/AIN1
~ PD5/T1/OC0B
PD4/T0/XCK
~ PD3/INT1/OC2B
PD2/INT0
PD1/TXD
PD0/RXD
IO13
IO12
IO11
IO10
IO9
IO8
IO7
IO6
IO5
IO4
IO3
IO2
IO1
IO0
ANALOG IN
PC0/ADC0
PC1/ADC1
PC2/ADC2
PC3/ADC3
PC4/ADC4/SDA
PC5/ADC5/SCL
A0
A1
A2
A3
A4
A5
ATMEGA328P-PU
1121
www.TheEngineeringProjects.com
ARDUINO UNO
VCC
U1
0.0
VOUT
LM35
A0
U2
SCL
SDA
INT
A0
A1
A2
PCF8574
C/F
IO2