Package Outline

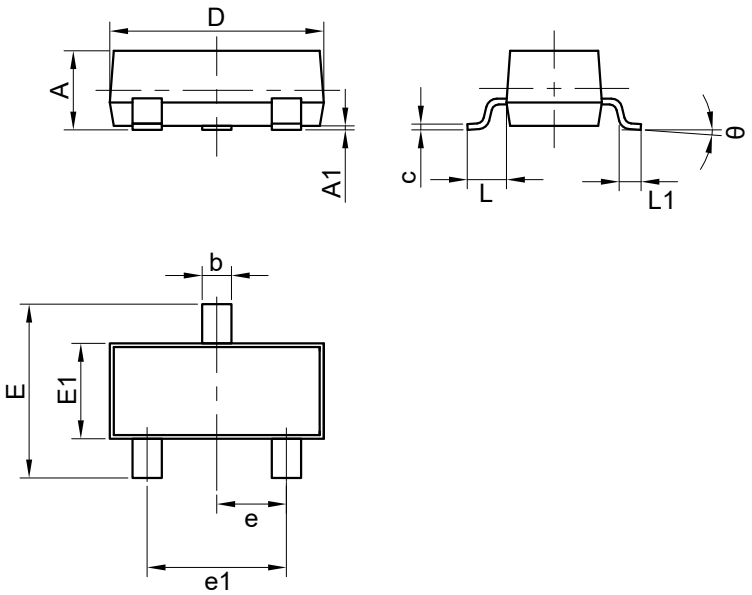

DIM	INCH		MM		
	MIN	MAX	MIN	MAX	NOTE
A	0.035	0.045*	0.90	1.15*	Note 1
A1	0.000	0.004	0.01	0.10	
b	0.012	0.020	0.30	0.50	
c	0.003	0.007	0.08	0.18	
D	0.110	0.120	2.80	3.04	
E	0.047	0.055	2.10	2.64	
E1	0.083	0.104	1.20	1.40	
e	0.037		0.95		TYP
e1	0.075		1.90		TYP
L	0.017	0.026	0.45	0.65	
L1	0.011	0.020	0.30	0.50	
θ	0°	8°	0°	8°	

Notes:
1. Dimension A for products from manufacturing site VN is controlled at maximum 1.10 mm.

Suggested Pad Layout (Unit:mm)

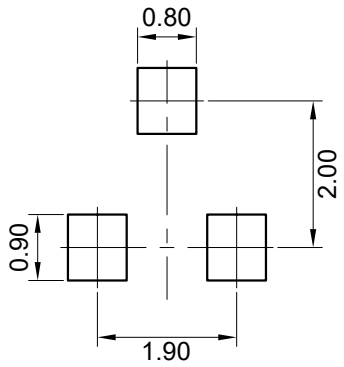

Notes:
1. The suggested land pattern dimensions have been provided for reference only.
2. For further information, please refer to document IPC-7351A.