PP8

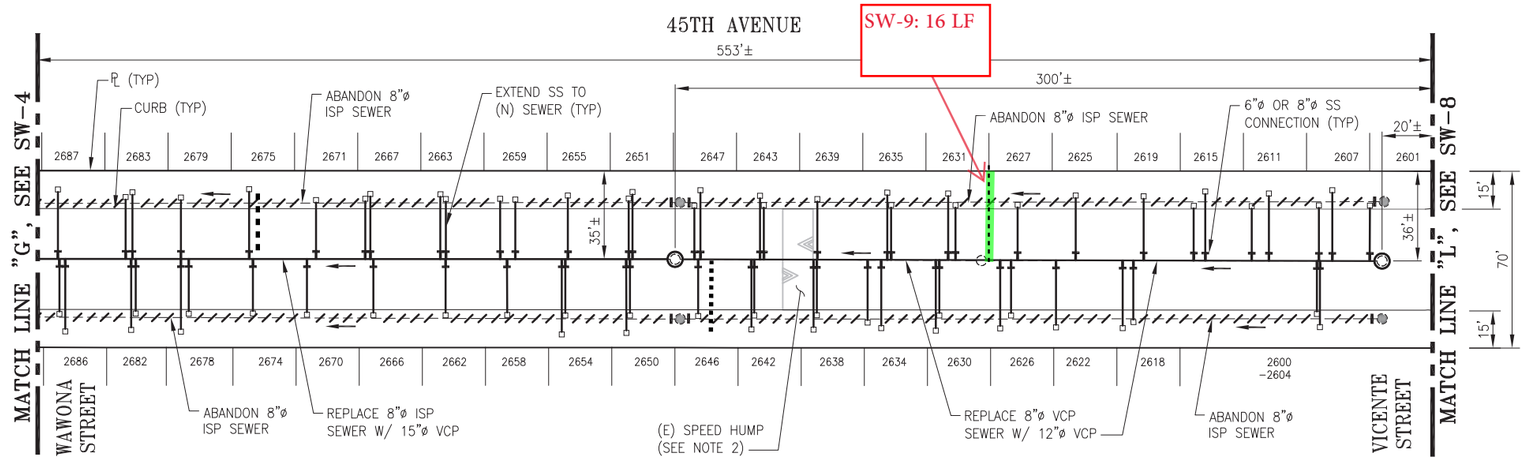

PLAN

SCALE: 1"=30'

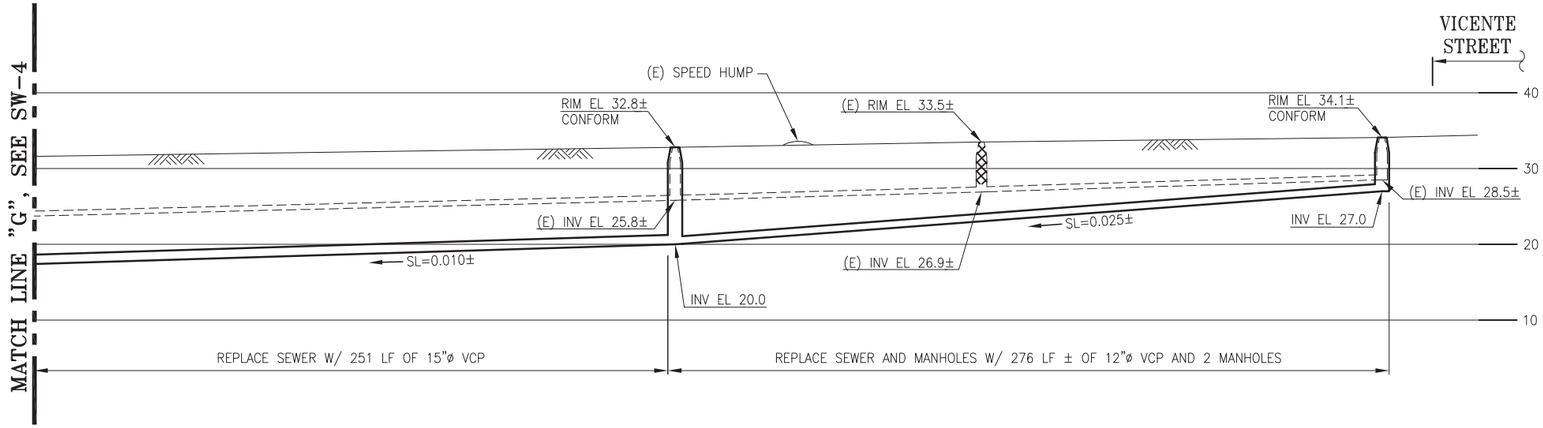

PROFILE – 45TH AVE

SCALE: HORIZ 1"=30'
VERT 1"=10'

NOTES:

1. CONTRACTOR IS TO REMOVE 8"ø ISP SEWER TO BE ABANDONED IF WORK IS UNABLE TO BE COMPLETED PER ORIGINAL SCOPE.
2. REMOVE/DEMOLISH SPEED HUMP PRIOR TO FINAL ACWS RESTORATION. SEE PR-4 FOR RESTORATION OF SPEED HUMP.
3. CONTRACTOR IS TO USE A WYE CONNECTION FOR SIDE SEWER LATERAL LOCATIONS ON THE SAME PROPERTY IF LATERALS ARE TOO CLOSE TO EACH OTHER TO BE REINSTATED SEPARATELY.

ELEVATION DATUM	SEWER SIZED BY D.R.
CITY	APPROVED BY N.B.

30' 0 30' 60' HORIZONTAL SCALE: 1"=30'

10' 0 10' 20' VERTICAL SCALE: 1"=10'

REFERENCE INFORMATION & FILE NO. OF SURVEYS
612
A-7008
EX-3180.1
EX-2180.2

REGISTERED PROFESSIONAL ENGINEER CHRISTOPHER A. LAM No. C69218 CIVIL STATE OF CALIFORNIA 12/2022

CITY AND COUNTY OF SAN FRANCISCO
SAN FRANCISCO PUBLIC WORKS
BUREAU OF ENGINEERING

SECTION MANAGER	DRAWN
L.WONG 05/12/2022	AK/ V.CHEUNG 05/2022
DEPUTY BUREAU MANAGER F.CISNEROS 06/24/2022	DESIGNED H.BAKER 05/2022
ACTING BUREAU MANAGER I.DHAPA 07/07/2022	CHECKED C.LINH 05/2022

NO.	DATE	DESCRIPTION	BY	APPR'D

REVISIONS

CONTRACT NO. WW-684

CITY AND COUNTY OF SAN FRANCISCO
PUBLIC UTILITIES COMMISSION
INFRASTRUCTURE DIVISION
ENGINEERING MANAGEMENT BUREAU

45TH AVE, 46TH AVE, 47TH AVE, VICENTE ST, WAWONA ST, AND SLOAT BLVD SEWER REPLACEMENT

46TH AVENUE
WAWONA STREET TO VICENTE STREET
PLAN AND PROFILE

CHECKED / APPROVED	DRAWN	SCALE
SECTION MANAGER	DESIGNED	DATE
APPROVED	APPROVED	
MANAGER, ENGINEERING MANAGEMENT BUREAU	ASSISTANT GENERAL MANAGER WASTE WATER ENTERPRISE	

SHEET	PLAN NO.	DRAWING / FILE NO.	REVISION NO.
11 OF 44	SW-7	121,458	0

FOR REDUCED PLANS ORIGINAL SCALE IS IN INCHES 0 4

HYD PROJECT NO. 10701