SW-10:
VCP Connection = 33 EA
SW-12:
Lateral replacement = 740.5 LF

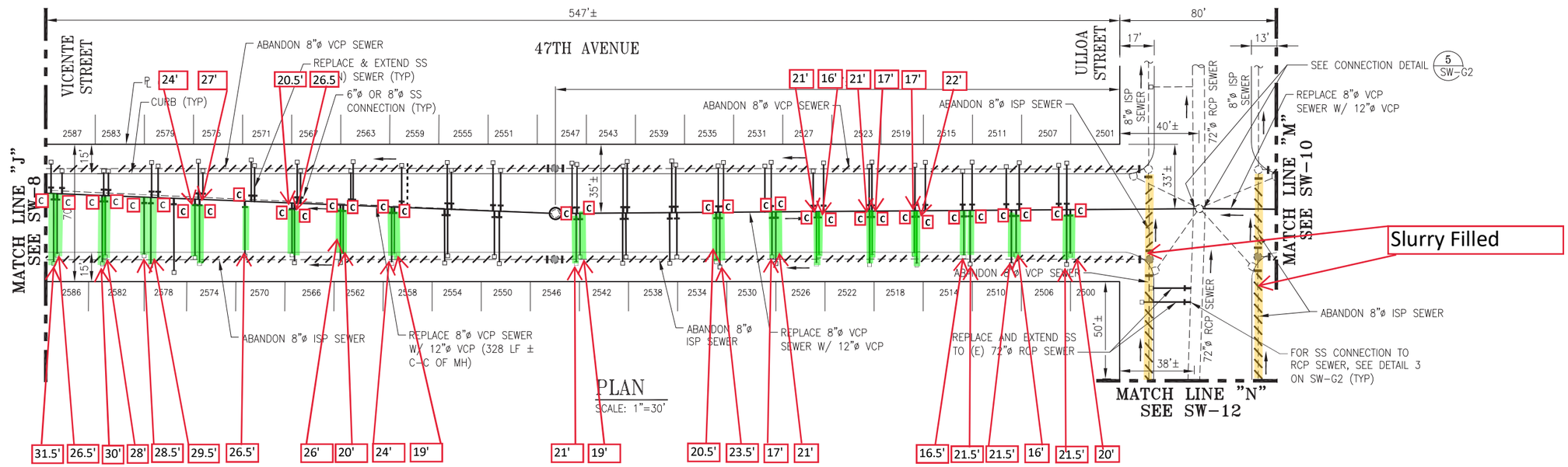


PLAN
SCALE: 1"=30'

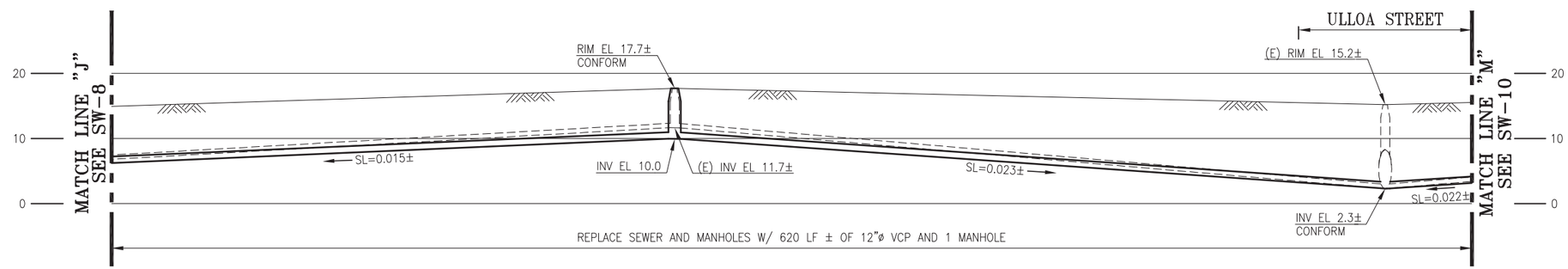


PROFILE – 47TH AVE
SCALE: HORIZ 1"=30'
VERT 1"=10'

NOTES:

1. CONTRACTOR IS TO USE A WYE CONNECTION FOR SIDE SEWER LATERAL LOCATIONS ON THE SAME PROPERTY IF LATERALS ARE TOO CLOSE TO EACH OTHER TO BE REINSTATED SEPARATELY.
2. 5 WORKING DAYS PRIOR TO MOBILIZATION FOR SEWER WORK, VERIFY INVERT ELEVATION AT 72" RCP AND 12" VCP SEWER. PROVIDE THE CITY REPRESENTATIVE WITH THE INVERT ELEVATIONS.

| ELEVATION DATUM | SEWER SIZED BY D.R. |
|---|---|
| CITY | APPROVED BY N.B. |

30' 0 30' 60' HORIZONTAL SCALE: 1"=30'
10' 0 10' 20' VERTICAL SCALE: 1"=10'

REFERENCE INFORMATION & FILE NO. OF SURVEYS
A-14529-1
A-7008
EX-5596
L-7131
P-254

REGISTERED PROFESSIONAL ENGINEER CHING K. LINH No. C69218 CIVIL STATE OF CALIFORNIA 05/12/2022

CONTRACT NO. WW-684

CITY AND COUNTY OF SAN FRANCISCO
PUBLIC UTILITIES COMMISSION
INFRASTRUCTURE DIVISION
ENGINEERING MANAGEMENT BUREAU

45TH AVE, 46TH AVE, 47TH AVE, VICENTE ST, WAWONA ST, AND SLOAT BLVD SEWER REPLACEMENT

47TH AVENUE
VICENTE STREET TO ULLOA STREET
PLAN AND PROFILE

CITY AND COUNTY OF SAN FRANCISCO
SAN FRANCISCO PUBLIC WORKS
BUREAU OF ENGINEERING

| | | | |
|---|---|---|---|
| SECTION MANAGER L.WONG | 05/12/2022 | DRAWN AK/ V.CHEUNG | 05/2022 |
| DEPUTY BUREAU MANAGER F.CISNEROS | 06/24/2022 | DESIGNED H.BAKER | 05/2022 |
| ACTING BUREAU MANAGER I.DHAPA | 07/07/2022 | CHECKED C.LINH | 05/2022 |

| NO. | DATE | DESCRIPTION | BY | APPR'D |
|---|---|---|---|---|
| | | | | |

REVISIONS

| CHECKED / APPROVED | DRAWN | SCALE |
|---|---|---|
| SECTION MANAGER | DESIGNED | DATE |
| APPROVED (MANAGER, ENGINEERING MANAGEMENT BUREAU) | APPROVED (ASSISTANT GENERAL MANAGER WASTE WATER ENTERPRISE) | |

| SHEET | PLAN NO. | DRAWING / FILE NO. | REVISION NO. |
|---|---|---|---|
| 13 OF 44 | SW-9 | 121,460 | 0 |

FOR REDUCED PLANS ORIGINAL SCALE IS IN INCHES 0 4

HYD PROJECT NO. 1070I