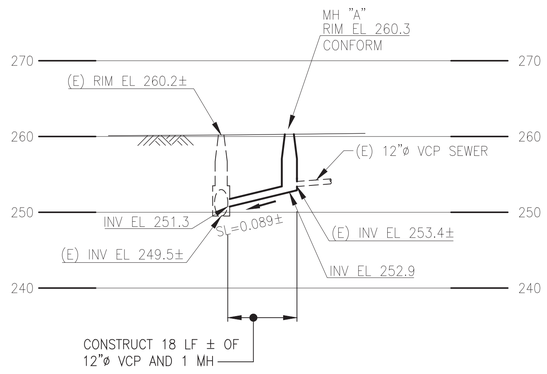

PROFILE "A"

SCALE: HORIZ 1"=20'
VERT 1"=10'

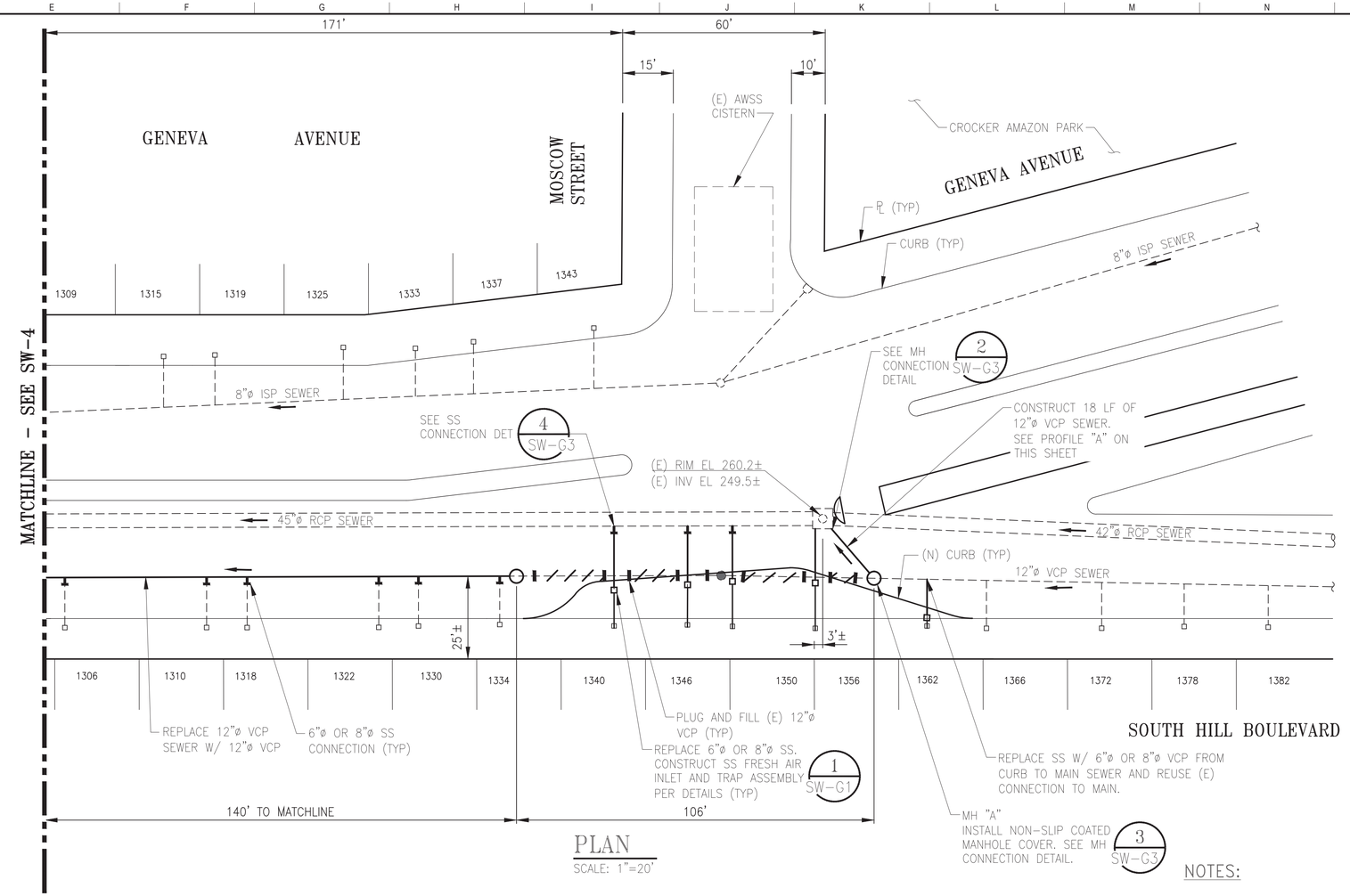

PLAN

SCALE: 1"=20'

NOTES:

1. PRIOR TO RELOCATION AND INSTALLATION OF SIDE SEWER TRAP AND FRESH AIR INLET ASSEMBLY, CONTRACTOR SHALL INVESTIGATE TO CONFIRM SIDE SEWER IS ACTIVE.
2. CONSTRUCT 6"ø OR 8"ø SS FROM CURB TO MANHOLE. USE 22.5° MAX BENDS.

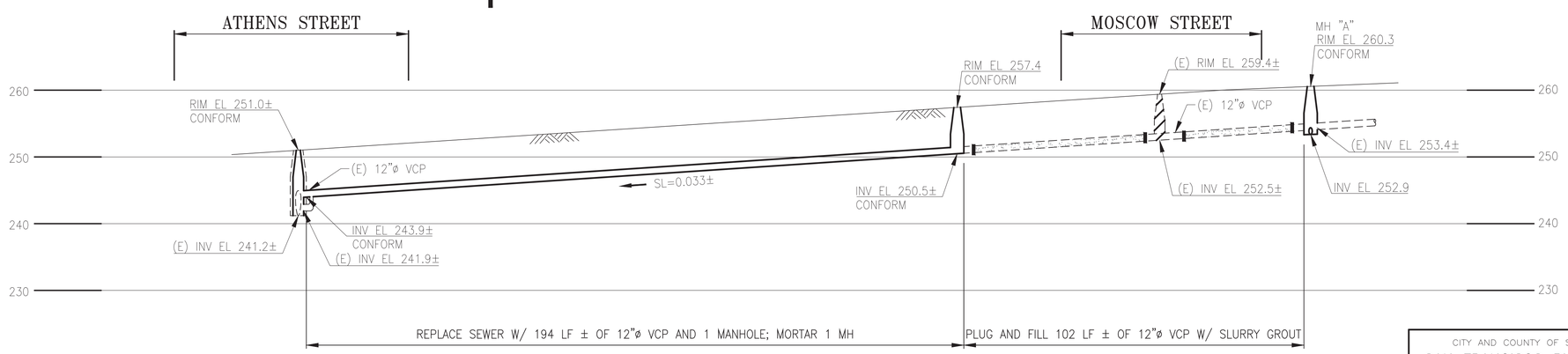

PROFILE "B"

SCALE: HORIZ 1"=20'
VERT 1"=10'

ELEVATION DATUM	SEWER SIZED BY B.A
CCSF-VD13	APPROVED BY N.B.

20 0 20 40 — HORIZONTAL SCALE: 1"=20'

10 0 10 20 — VERTICAL SCALE: 1"=10'

REFERENCE INFORMATION & FILE NO. OF SURVEYS
73987
A-10357
A-30376

REGISTERED PROFESSIONAL ENGINEER MATTHEW W. LIM No. C84732 CIVIL STATE OF CALIFORNIA
10/6/2021

CITY AND COUNTY OF SAN FRANCISCO
SAN FRANCISCO PUBLIC WORKS
BUREAU OF ENGINEERING

SECTION MANAGER L.WONG	10/13/2021	DRAWN A.MOMBENI/V.GOH	09/2021
DEPUTY BUREAU MANAGER F.CISNEROS	12/09/2021	DESIGNED V.GOH	09/2021
ACTING BUREAU MANAGER I.DHAPA	12/10/2021	CHECKED M.LIM	09/2021

NO.	DATE	DESCRIPTION	BY	APPR'D

REVISIONS

SOURCING EVENT ID. 0000005626

CITY AND COUNTY OF SAN FRANCISCO
PUBLIC UTILITIES COMMISSION
INFRASTRUCTURE DIVISION
ENGINEERING MANAGEMENT BUREAU

MISSION ST AND GENEVA AVE IMPROVEMENT PROJECT

GENEVA AVENUE SEWER REPLACEMENT ATHENS STREET TO MOSCOW STREET PLAN AND PROFILES

CHECKED / APPROVED	DRAWN	SCALE
SECTION MANAGER	DESIGNED	DATE
APPROVED (MANAGER, ENGINEERING MANAGEMENT BUREAU)	APPROVED (ASSISTANT GENERAL MANAGER WASTE WATER ENTERPRISE)	

AS NOTED

SHEET	PLAN NO.	DRAWING / FILE NO.	REVISION NO.
123 OF 210	SW-5	120,689	0

HYD PROJECT NO. 12061