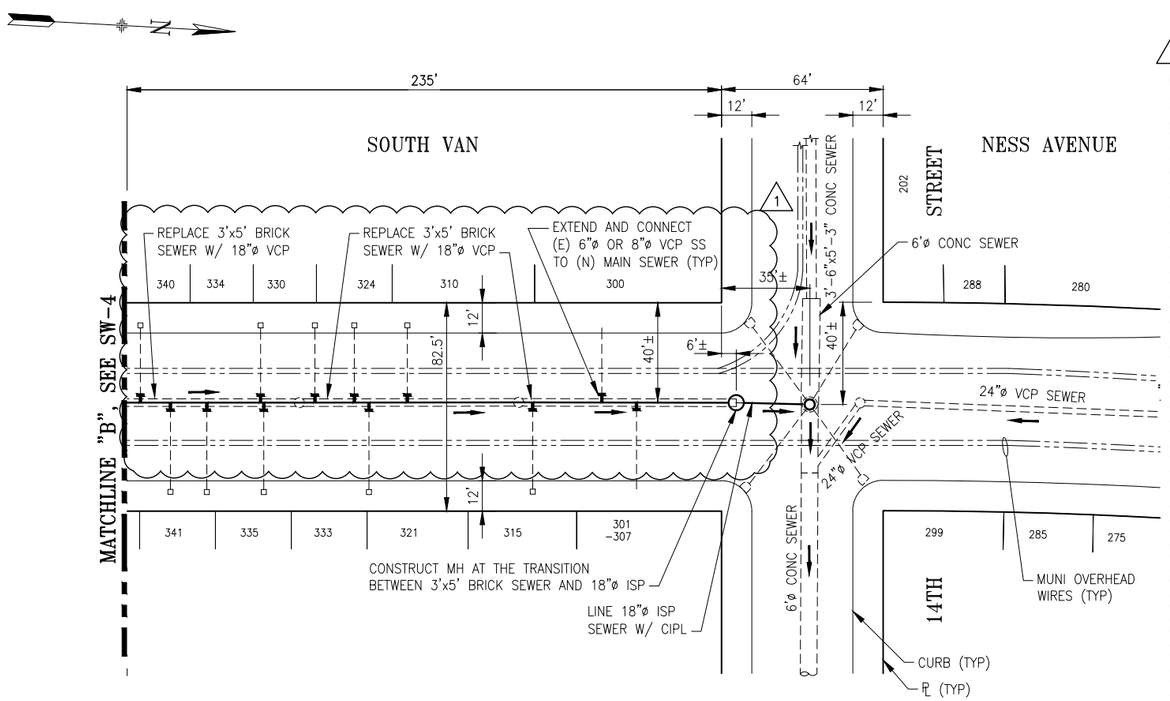

PLAN

SCALE: 1"=30'

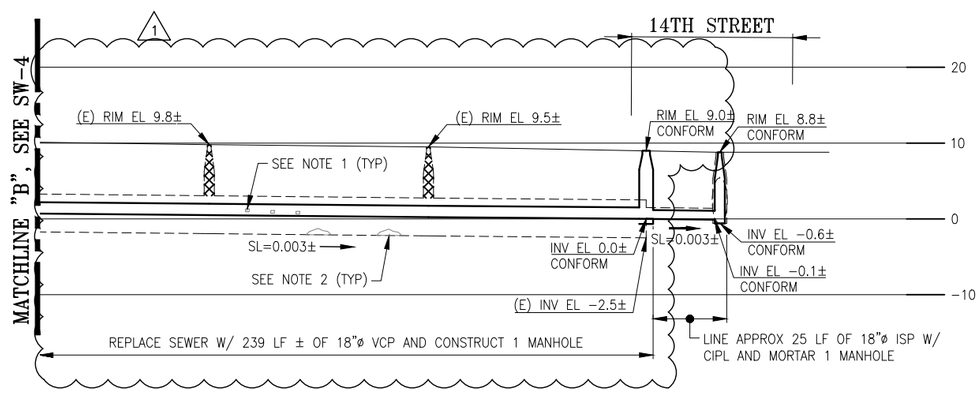

PROFILE

SCALE: HORIZ 1"=30'
VERT 1"=10'

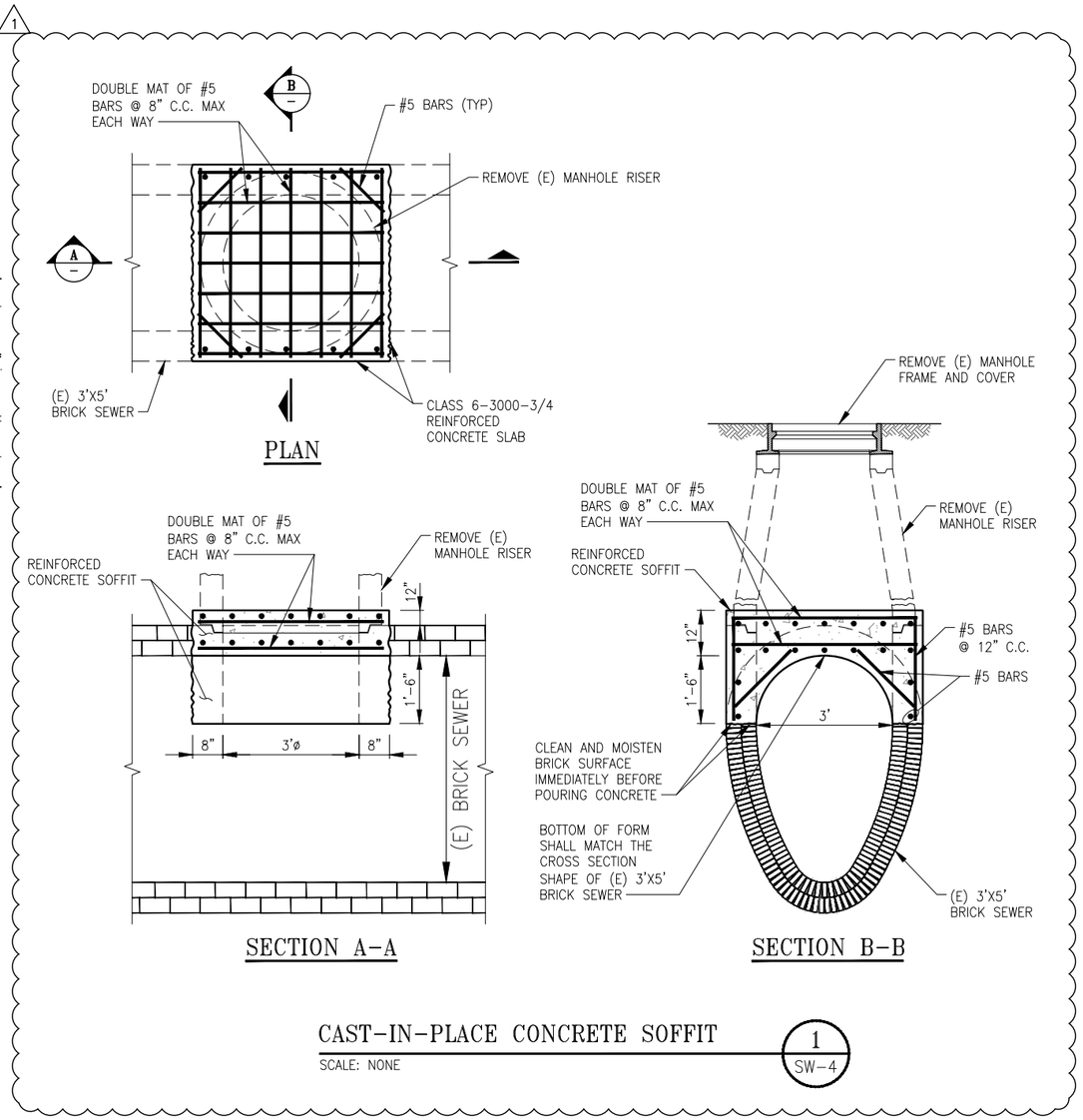

CAST-IN-PLACE CONCRETE SOFFIT

SCALE: NONE

1
SW-4

NOTES:

1. PRIOR TO LINING, REMOVE ALL PROTRUDING BRICKS (APPROXIMATELY 10' ON CENTER, EACH SIDE) AND SIDE SEWERS.
2. PRIOR TO LINING REMOVE DEBRIS AND RATWALK AS NECESSARY TO INSTALL UNIFORM LINER.
3. FOLLOW LINING DETAIL FROM DRAWING SW-G2 "LINING 3'x5' BRICK SEWER".

By: Thomas Won

05/15/2023

ELEVATION DATUM	SEWER SIZED BY Y.W.
CITY	APPROVED BY N.B.

10 0 10 20 — VERTICAL SCALE: 1"=10'

30 0 30 60 — HORIZONTAL SCALE: 1"=30'

REFERENCE INFORMATION & FILE NO. OF SURVEYS

BK079 PG027

REGISTERED PROFESSIONAL ENGINEER THOMAS D. WON No. C75494 CIVIL STATE OF CALIFORNIA

CITY AND COUNTY OF SAN FRANCISCO
SAN FRANCISCO PUBLIC WORKS
BUREAU OF ENGINEERING

SECTION MANAGER L.WONG		DRAWN S.HUEY	05/2023
DEPUTY BUREAU MANAGER F.CISNEROS		DESIGNED T.WON	05/2023
ACTING BUREAU MANAGER I.DHAPA		CHECKED J.HELMUTH	05/2023

NO.	DATE	DESCRIPTION	BY	APPR'D
1	05/23	SCOPE CHANGES PER PCO #2	T.W.	J.H.

REVISIONS

SOURCING EVENT ID: 0000003759

CITY AND COUNTY OF SAN FRANCISCO
PUBLIC UTILITIES COMMISSION
INFRASTRUCTURE DIVISION
ENGINEERING MANAGEMENT BUREAU

VARIOUS LOCATION PAVEMENT RENOVATION NO. 54 AND SEWER REPLACEMENT

SOUTH VAN NESS AVE SEWER REPLACMENT MATCHLINE "B" TO 14TH STREET PLAN AND PROFILE

CHECKED / APPROVED	DRAWN	SCALE
SECTION MANAGER	DESIGNED	DATE
APPROVED	APPROVED	
MANAGER, ENGINEERING MANAGEMENT BUREAU	ASSISTANT GENERAL MANAGER WASTE WATER ENTERPRISE	

SHEET	PLAN NO.	DRAWING / FILE NO.	REVISION NO.
	SW-5	119,170	

HYD PROJECT NO. 1217I