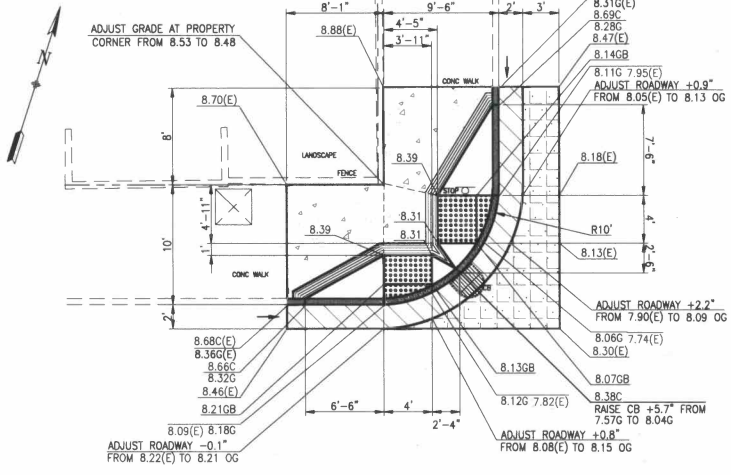


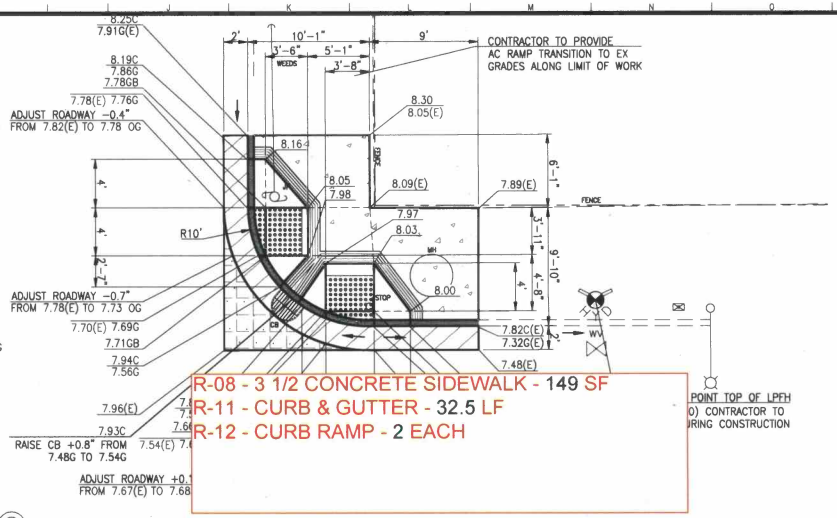


R-08 - 3 1/2 CONCRETE SIDEWALK - 149 SF
R-11 - CURB & GUTTER - 32.5 LF
R-12 - CURB RAMP - 2 EACH

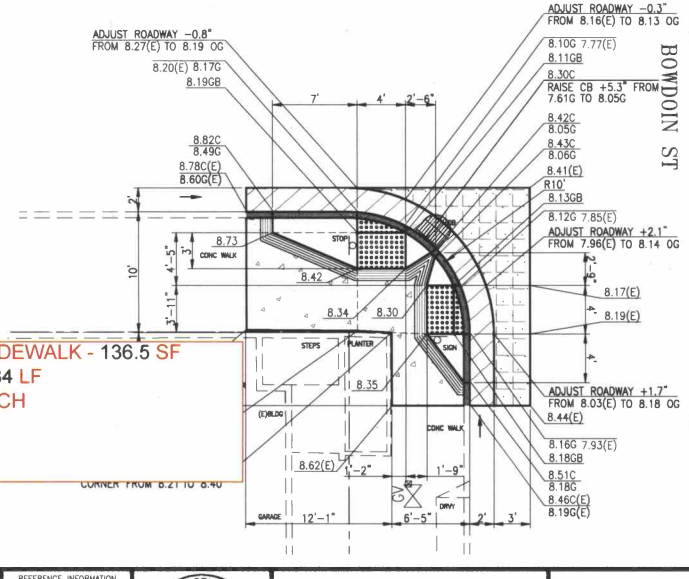


R-08 - 3 1/2 CONCRETE SIDEWALK - 136.5 SF
R-11 - CURB & GUTTER - 34 LF
R-12 - CURB RAMP - 2 EACH

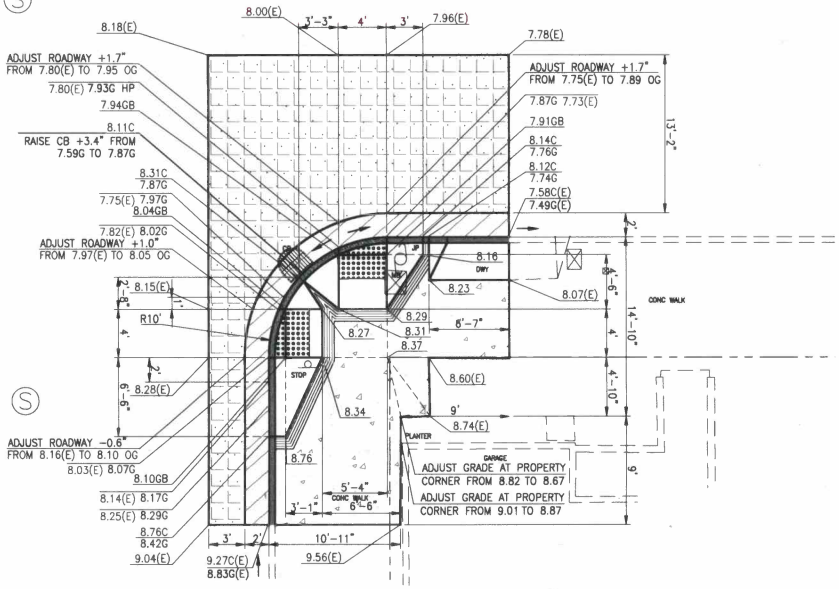


AGS 5 FREELAND STREET SAN FRANCISCO, CA 94107

| NO. | DATE | DESCRIPTION | BY | APP. |
|---|---|---|---|---|

TABLE OF REVISIONS
THIS DRAWING WAS LAST MODIFIED: 11/20/20 12:55, BY: pavel.guevarra

REFERENCE INFORMATION & FILE NO. OF SURVEYS

SEAL OF THE CITY AND COUNTY OF SAN FRANCISCO

SAN FRANCISCO PUBLIC WORKS

BUREAU OF ENGINEERING
CITY & COUNTY OF SAN FRANCISCO
SAN FRANCISCO PUBLIC WORKS
49 SOUTH VAN NESS AVENUE, SUITE 800
SAN FRANCISCO, CA 94103

| | | Date |
|---|---|---|
| Acting Section Mgr: | Eric Kielsberg | 11/24/2020 |
| Deputy Bureau Mgr: | Fernando Cisneros | 12/10/2020 |
| Acting Bureau Mgr: | Iqbal Dhaya | 12/22/2020 |

| | | |
|---|---|---|
| DESIGNED: | JL | DATE: 10/2020 |
| DRAWN: | JL | DATE: 10/2020 |
| CHECKED: | KL | DATE: 10/2020 |

REGISTERED PROFESSIONAL ENGINEER KENNETH JAMES LITELL No. C39230 Exp. 12/31/2021 CIVIL STATE OF CALIFORNIA

SCALE: 1" = 5'

SHEET OF SHEETS: 16 OF 39

PAUL AVE, WOOLSEY ST AND SALINAS AVE
PAVEMENT RENOVATION AND SEWER REPLACEMENT

WOOLSEY STREET AT BOWDOIN STREET
CURB RAMP DETAILS

CONTRACT ID. 1000015860
DRAWING NO. CR-03
FILE NO. 117,485
REV. NO.

Drawing Path: Z:\AGS\projects\2014\ACS-14-027 SFPUC CS-386 As-Needed Engineering (AJ-ACS JV)\Civil\Task 11 - University Mount Curb ramps\5_Production\1_Drawings\2_Sheets\CR-03 Woolsey and Bowdoin.dwg, Login: pavel.guevarra
Plot Time: Fri, 20 Nov 2020 - 1:01pm
Dimension Scale: 10
Model Units: Feet
Measurement Units are English