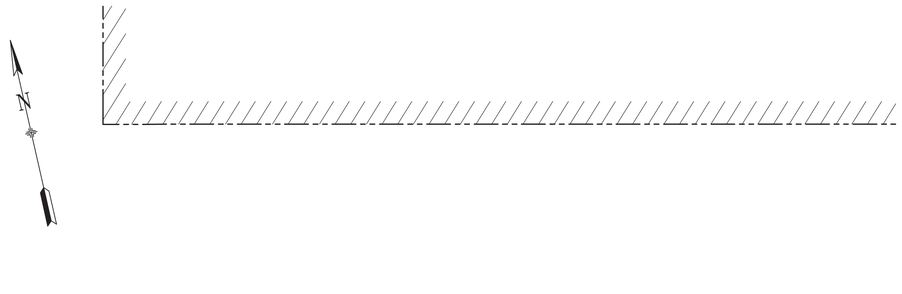

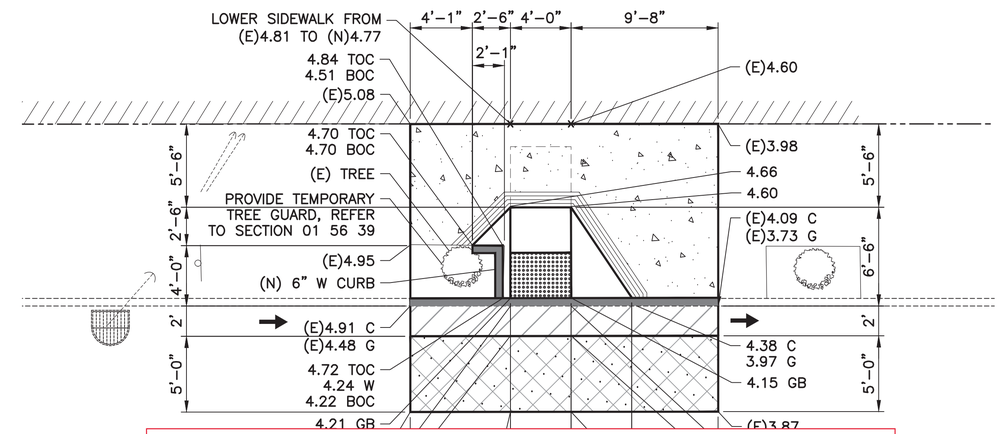

R-10: 6" Concrete Curb

R-08 - 3 1/2 CONCRETE SIDEWALK - 168 SF
~~R-09 - 4" CONCRETE CURB~~ - 10.5 LF
R-11 - CURB & GUTTER - 21 LF
R-12 - CURB RAMP - 1 EACH

PAUL AVE.

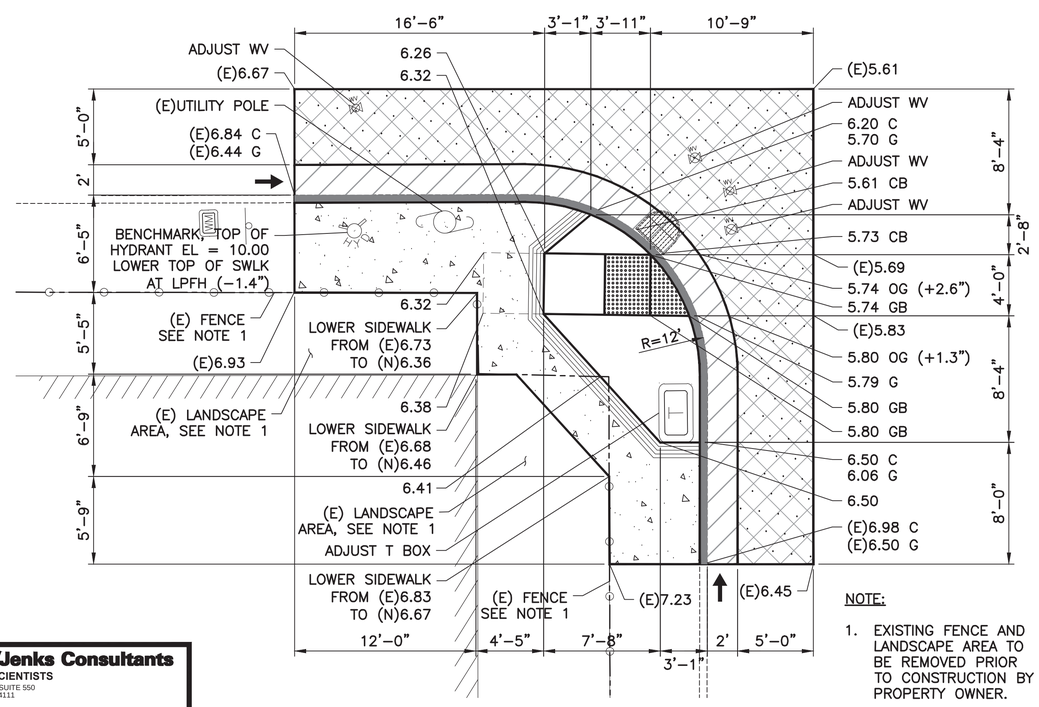

EXETER ST.

NOTE:

1. EXISTING FENCE AND LANDSCAPE AREA TO BE REMOVED PRIOR TO CONSTRUCTION BY PROPERTY OWNER.

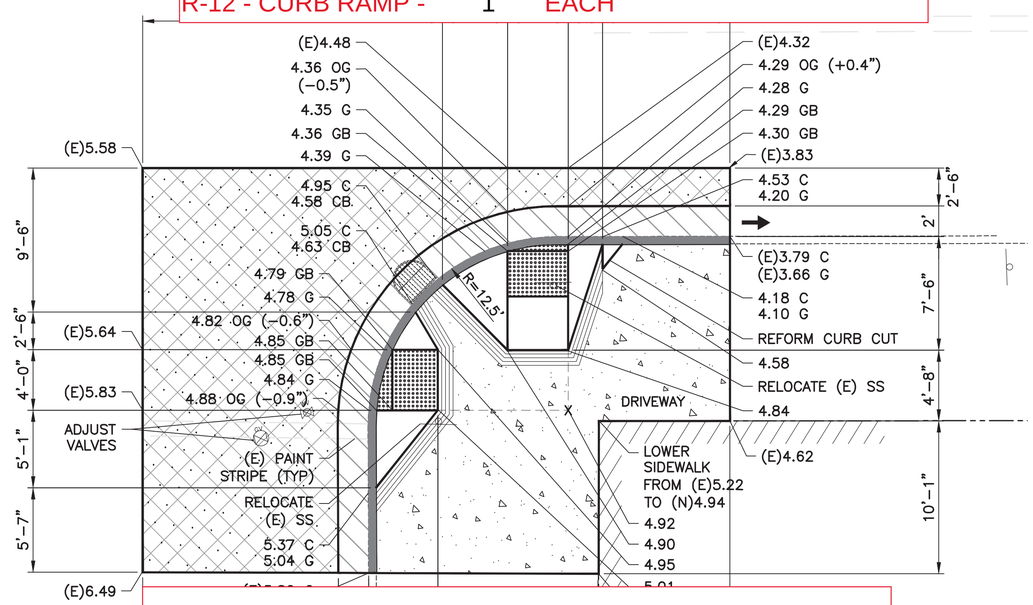

R-08 - 3 1/2 CONCRETE SIDEWALK - 277 SF
R-11 - CURB & GUTTER - 44.5 LF
R-12 - CURB RAMP - 2 EACH

GRAPHIC SCALE
2.5 0 2.5 5 10
(IN FEET)
1 INCH = 5 FEET

Kennedy/Jenks Consultants
ENGINEERS & SCIENTISTS
275 BATTERY STREET, SUITE 550
SAN FRANCISCO, CA 94111
PHONE (415) 243-2150
FAX (415) 896-0999

NO.	DATE	DESCRIPTION	BY	APP.

TABLE OF REVISIONS
THIS DRAWING WAS LAST MODIFIED: 10/12/20 10:49, BY: BennyRocha

REFERENCE INFORMATION & FILE NO. OF SURVEYS

SEAL OF THE CITY AND COUNTY OF SAN FRANCISCO

SAN FRANCISCO PUBLIC WORKS

BUREAU OF ENGINEERING
CITY & COUNTY OF SAN FRANCISCO
SAN FRANCISCO PUBLIC WORKS
49 SOUTH VAN NESS AVENUE, SUITE 800
SAN FRANCISCO, CA 94103

		Date:
Acting Section Mgr:	ERIC KJELSBERG	11/24/2020
Deputy Bureau Mgr:	FERNANDO CISNEROS	12/10/2020
Acting Bureau Mgr:	IQBAL DHAPA	12/22/2020

DESIGNED: DJM	DATE: 11/11/16
DRAWN: ROO	DATE: 11/11/16
CHECKED: KCA	DATE: 11/11/16

REGISTERED PROFESSIONAL ENGINEER KERWIN C. ALLEN No. C65166 Exp. 9/30/21 CIVIL STATE OF CALIFORNIA

SCALE: 1"=5'

SHEET OF SHEETS 23 OF 39

PAUL AVE, WOOLSEY ST AND SALINAS AVE
PAVEMENT RENOVATION AND SEWER REPLACEMENT

PAUL AVENUE AT EXETER STREET
CURB RAMP DETAILS

CONTRACT ID. 1000015860
DRAWING NO. CR-10
FILE NO. 117,492
REV. NO.

Drawing Path: N:\2015\1568001.03 – Curb Ramps 2501U University\10-PaulWoolseySalinas\1568001.03_CR10.dwg, Layout: CR-10
Plot Time: Mon, 12 Oct 2020 – 10:50am
Xrefs: X-TOPO-Paul & Exeter.dwg
\\KJJC\KJC-Root\Kj-Cad\Sanfrancisco\2015\1568001.03 – Curb Ramps 2501U University\10-PaulWoolseySalinas\BE2_TB_22x34_ESHL
Measurement: Units are English
Model Units: Undefined