FEBRUARY

SW- 03 - Concrete Manhole - 2 Each

SW- 07 - 21" VCP Sewer - 252 LF

SW-13 - 6" or 8" Diameter side sewer connection- 1 Each

MH CONNECTION DETAIL (1/–)

SCALE: NTS

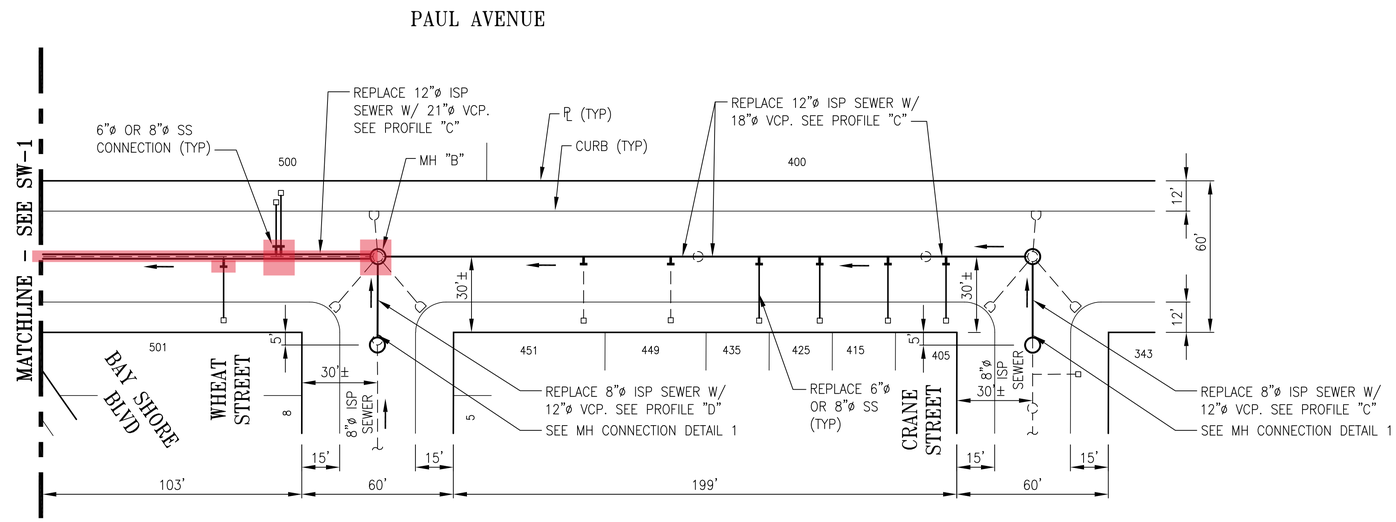

PLAN

SCALE: 1"=30'

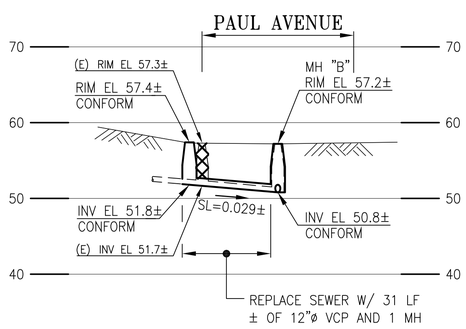

PROFILE "D" (LOOKING WEST)

SCALE: HORIZ 1"=30'
VERT 1"=10'

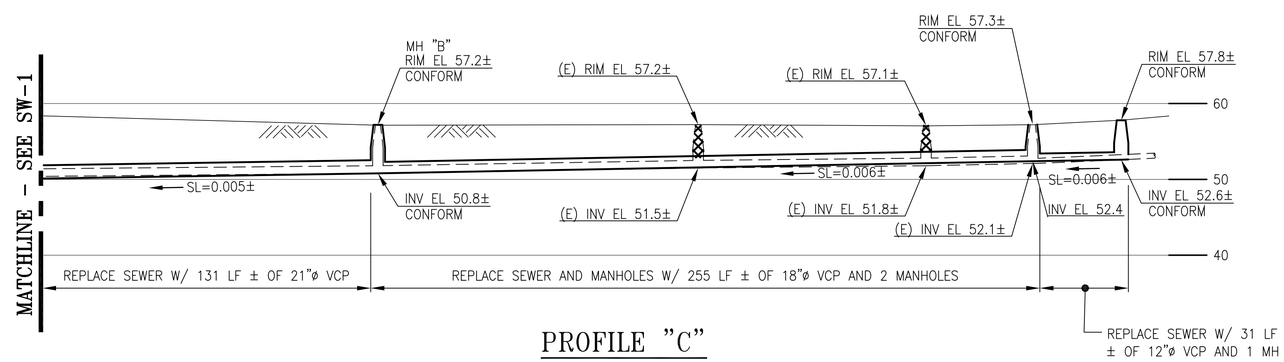

PROFILE "C"

SCALE: HORIZ 1"=30'
VERT 1"=10'

ELEVATION DATUM	SEWER SIZED BY J.F.
CITY	APPROVED BY N.B.

30 0 30 60 HORIZONTAL SCALE: 1"=30'

10 0 10 20 VERTICAL SCALE: 1"=10'

REFERENCE INFORMATION & FILE NO. OF SURVEYS
A-8099
A-8100
P3-285

REGISTERED PROFESSIONAL ENGINEER DERRICK CHAN No. C73132 Exp.12/31/2020 CIVIL STATE OF CALIFORNIA
12/08/2020

CITY AND COUNTY OF SAN FRANCISCO
SAN FRANCISCO PUBLIC WORKS
BUREAU OF ENGINEERING

SECTION MANAGER L.WONG	12/08/2020	DRAWN A.MOMBENI	12/2020
DEPUTY BUREAU MANAGER F.CISNEROS	12/10/2020	DESIGNED D.REYLA	12/2020
ACTING BUREAU MANAGER I.DHAPA	12/22/2020	CHECKED D.CHAN	12/2020

NO.	DATE	DESCRIPTION	BY	APPR'D

REVISIONS

CONTRACT NO. 10035454

CITY AND COUNTY OF SAN FRANCISCO
PUBLIC UTILITIES COMMISSION
INFRASTRUCTURE DIVISION
ENGINEERING MANAGEMENT BUREAU

PAUL AVE, WOOLSEY ST AND SALINAS AVE
PAVEMENT RENOVATION AND SEWER REPLACEMENT

PAUL AVENUE SEWER REPLACEMENT
BAY SHORE BLVD TO CRANE STREET
PLAN, PROFILES AND DETAIL

CHECKED / APPROVED	DRAWN	SCALE
SECTION MANAGER	DESIGNED	DATE AS NOTED
APPROVED	APPROVED	
MANAGER, ENGINEERING MANAGEMENT BUREAU	ASSISTANT GENERAL MANAGER WASTE WATER ENTERPRISE	

SHEET	PLAN NO.	DRAWING / FILE NO.	REVISION NO.
31 OF 39	SW-2	117,500	0

FILE: \\DPW.CI.SF.CA.US\BOE\PROJECTS\1208I_PAUL_AVE_SEWER_REPLACEMENT_(JV)\2_DESIGN\WORKING_DRAWINGS\EHY\1208J_SW01-SW02.DWG

HYD PROJECT NO. 1208I