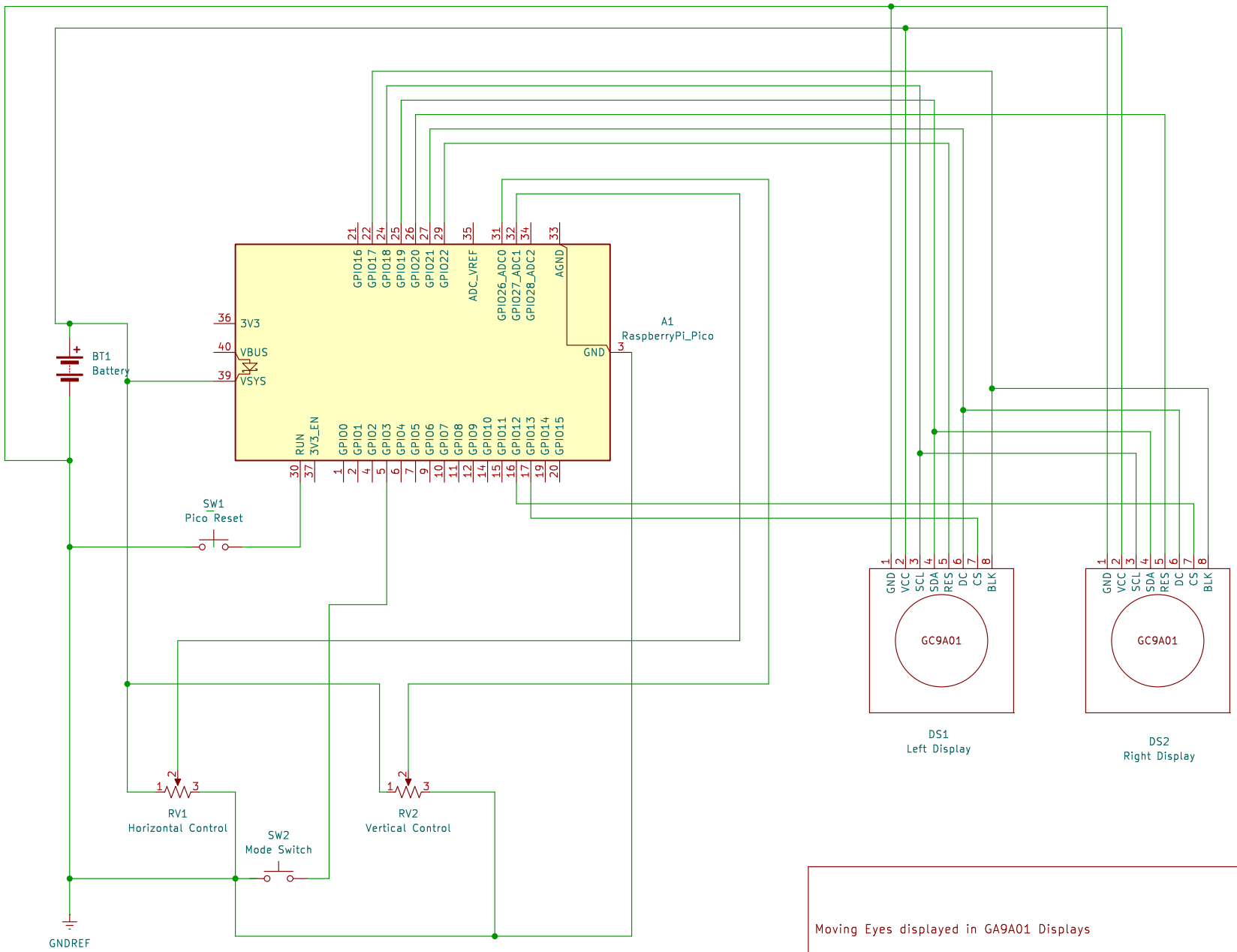

Moving Eyes displayed in GA9A01 Displays

Sheet: /
File: RoundEyes.kicad_sch

Title: Round Eyes Display

Size: A	Date: 2025-10-03	**Rev: 1.0**
KiCad E.D.A. 9.0.5		Id: 1/1