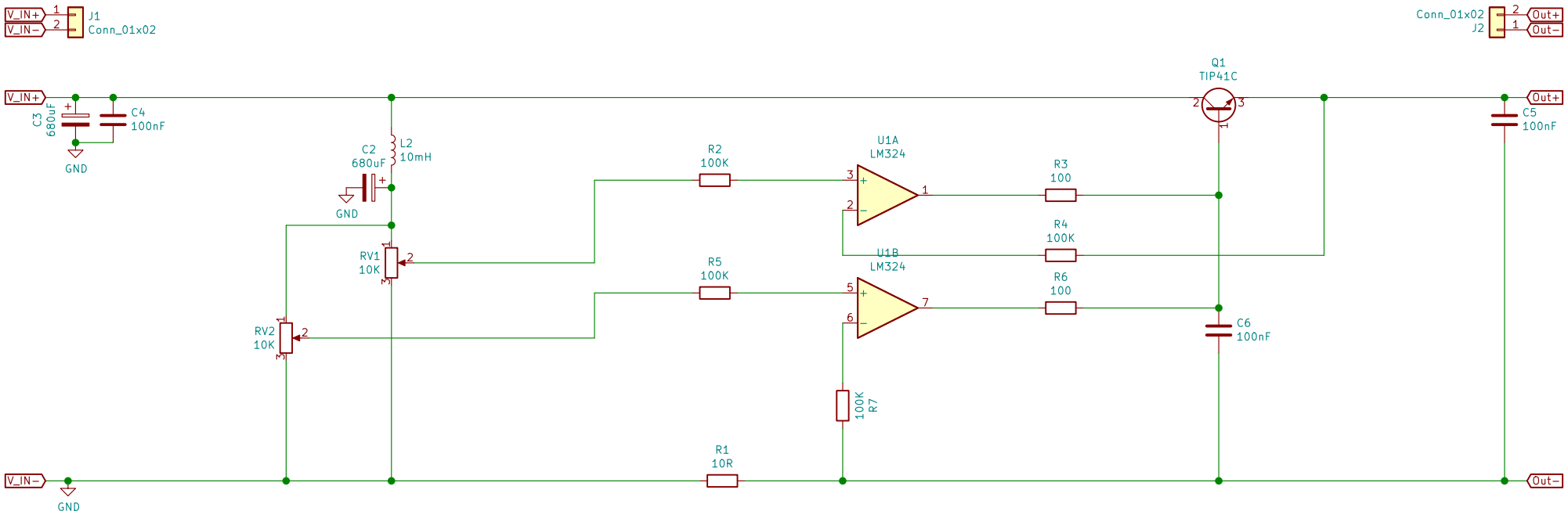

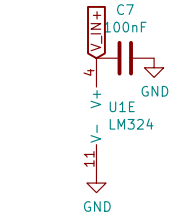

Test and configuration of the cc loop

Heirs Electronic

Sheet: /

File: rev−1.3.sch

Title: Heirs Lab Power Supply

Size: A4	Date: 2020−08−22	**Rev: 1.3**
KiCad E.D.A. kicad 5.1.8		Id: 1/1