TSAL circuit draft
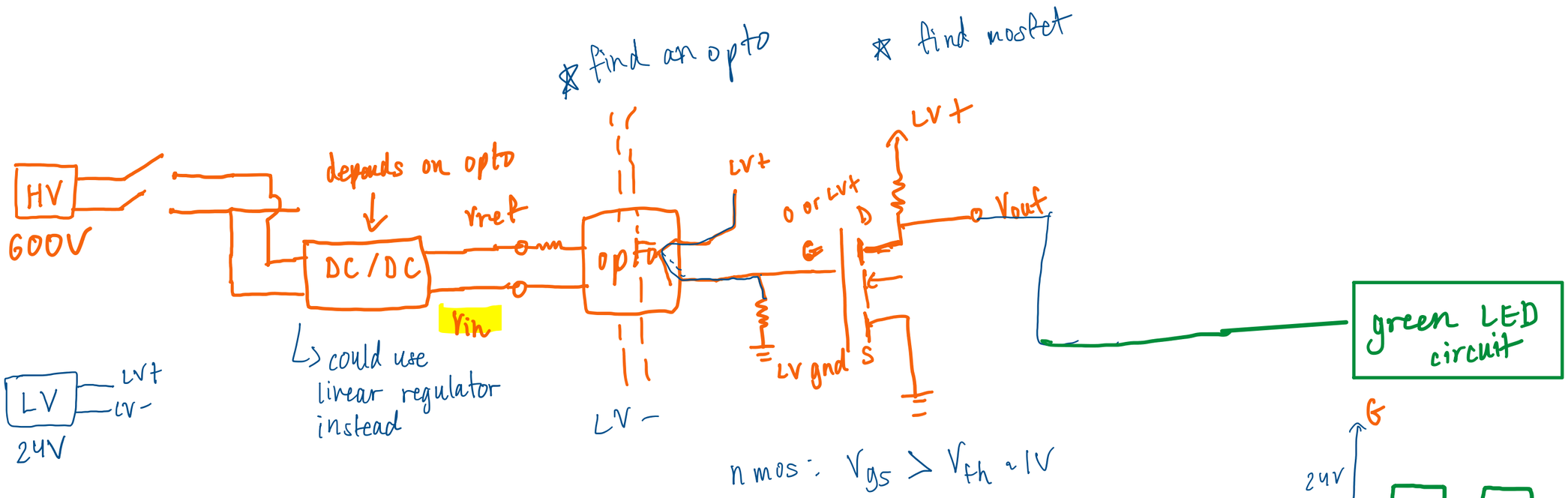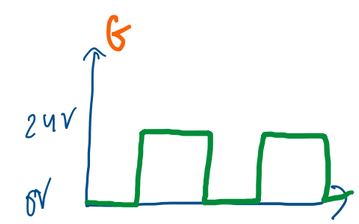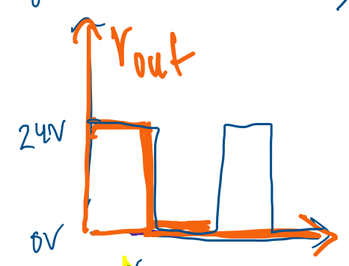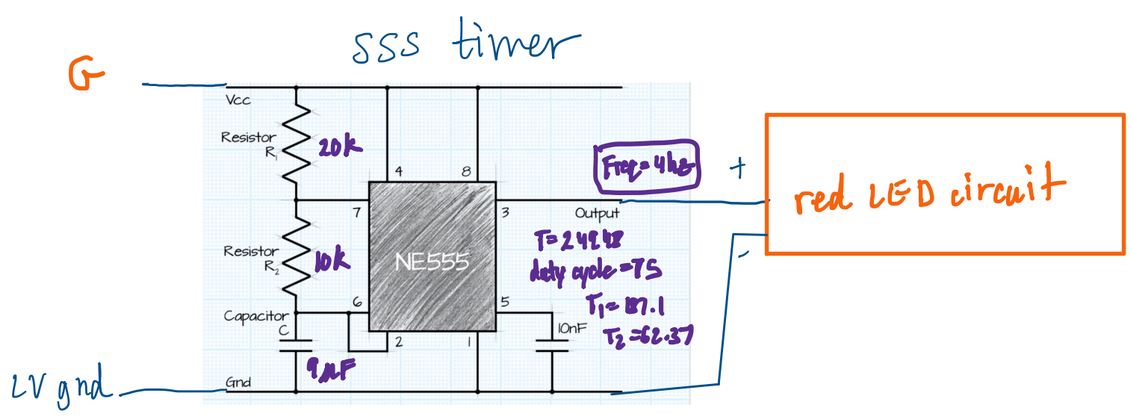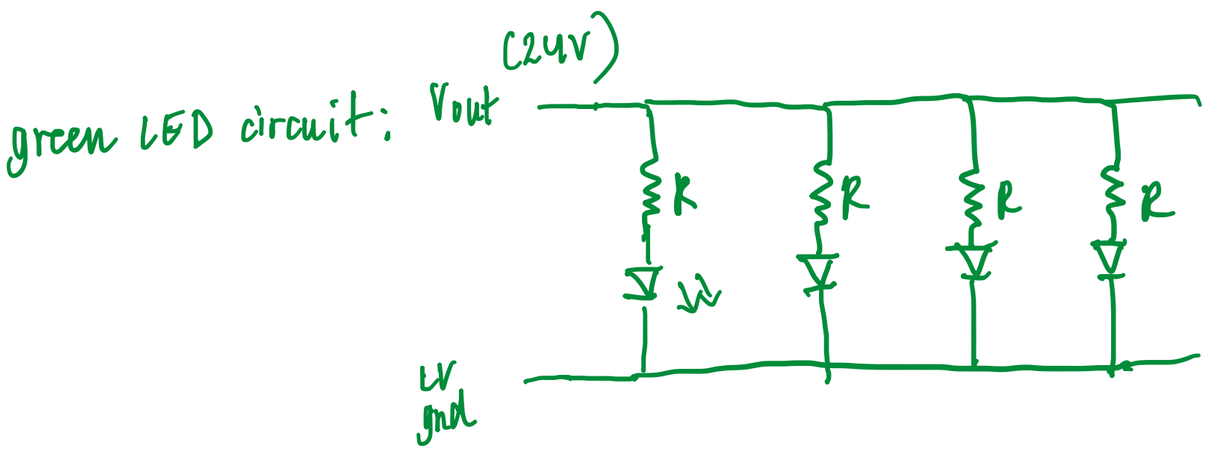
Tuesday, October 23, 2018 3:41 PM