AIL BOARD

High Voltage Measurement

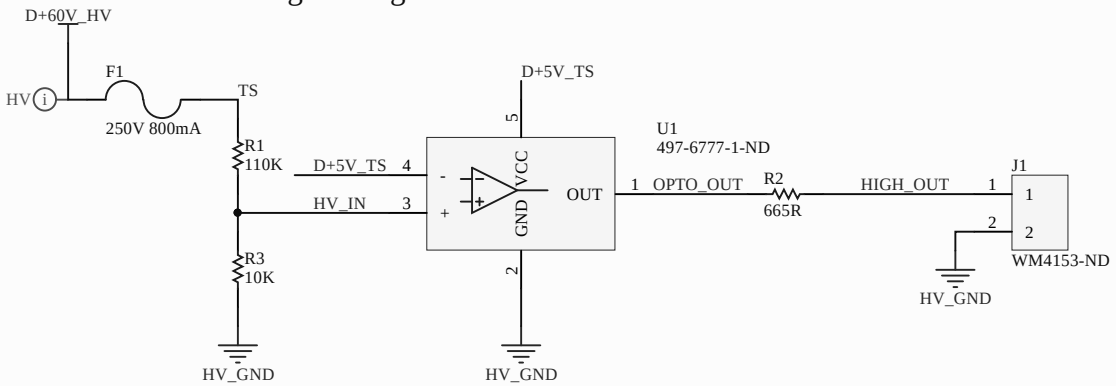

Input

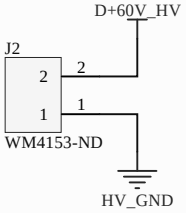

Step Down

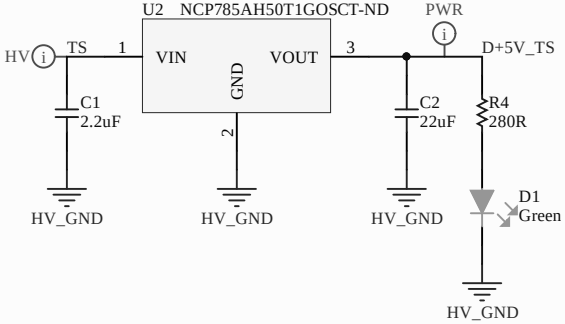

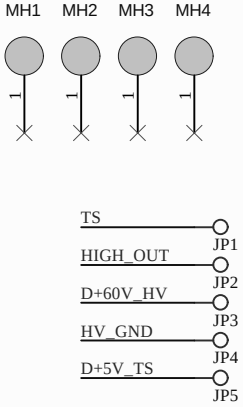

Title	AIL BOARD		
Size A4	Number		Revision 2
Date:	2020-10-25	Sheet 1 of 1	
File:	C:\Users\..\AIL_REV2.SchDoc	Drawn By:	