View from Front side (Scale 1:1)

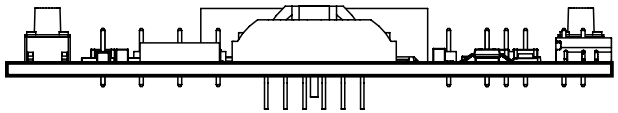

View from Right side (Scale 1:1)

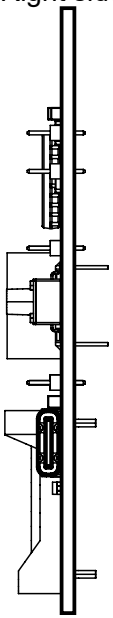

View from Top side (Scale 1:1)

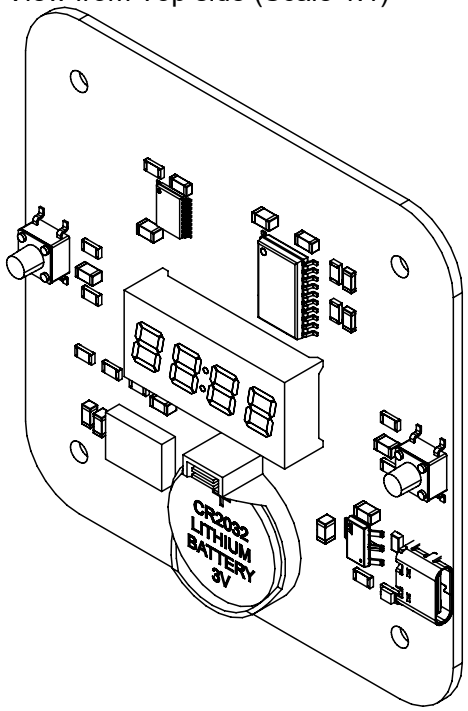

View from Top side (Scale 1:1)

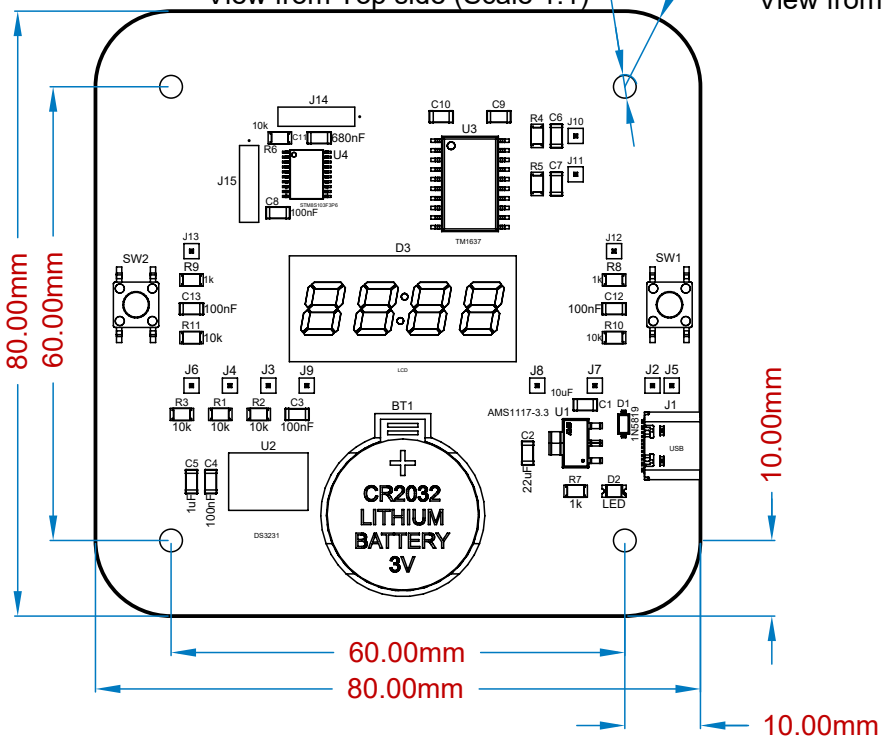

View from Left side (Scale 1:1)

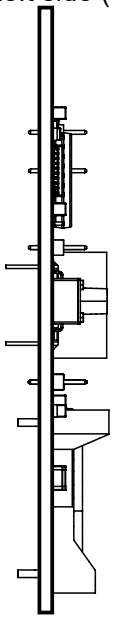
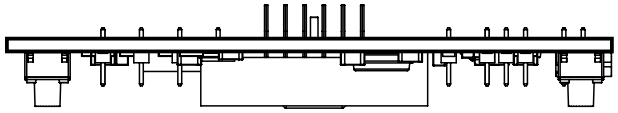
View from Back side (Scale 1:1)