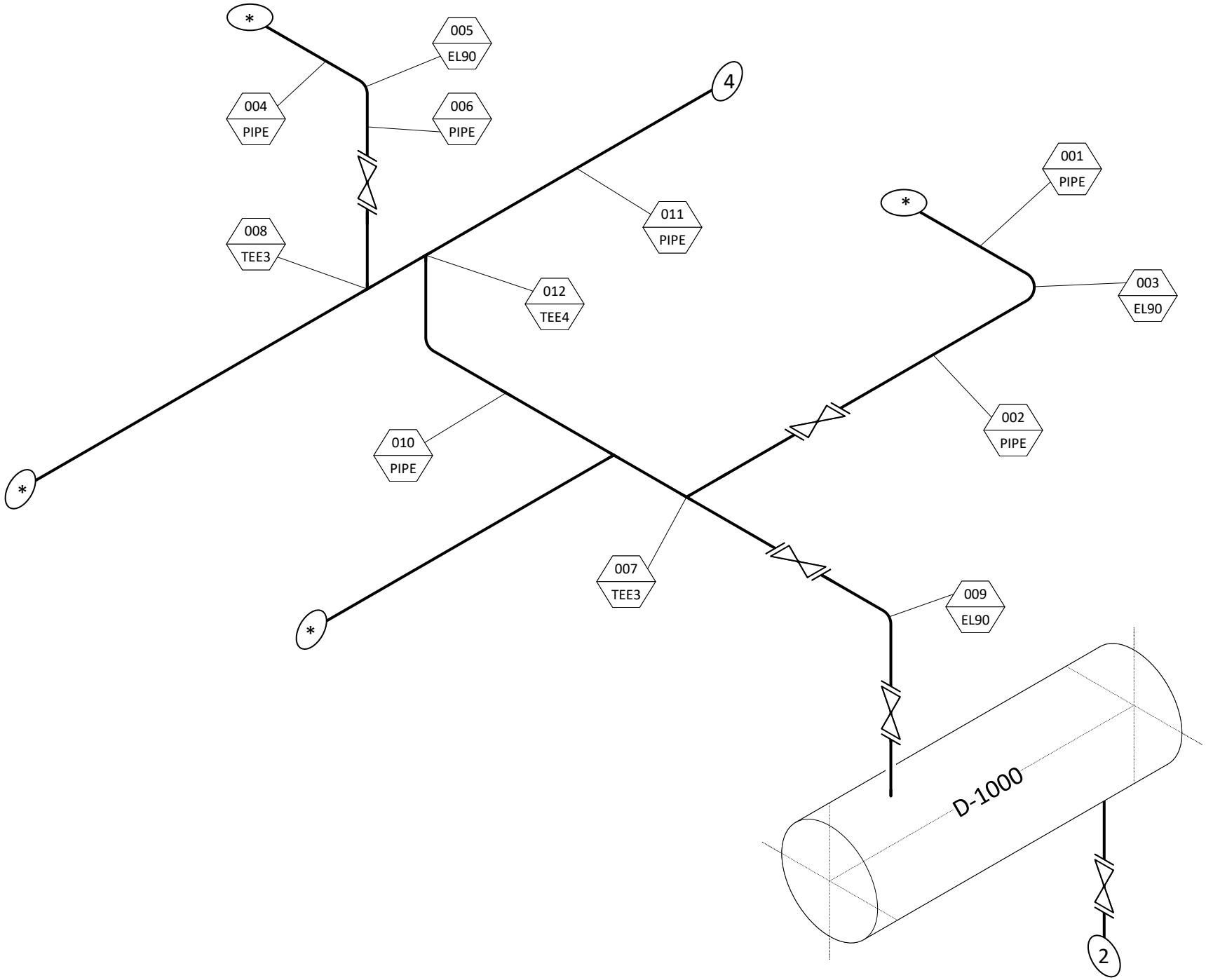

	Drawn By	Revised	Drawing Title	Description	Page
API American Petroleum Institute	API TR 596	MM/DD/YYYY	SWS-1	CML Statistical Analysis EXAMPLE	1 of 6

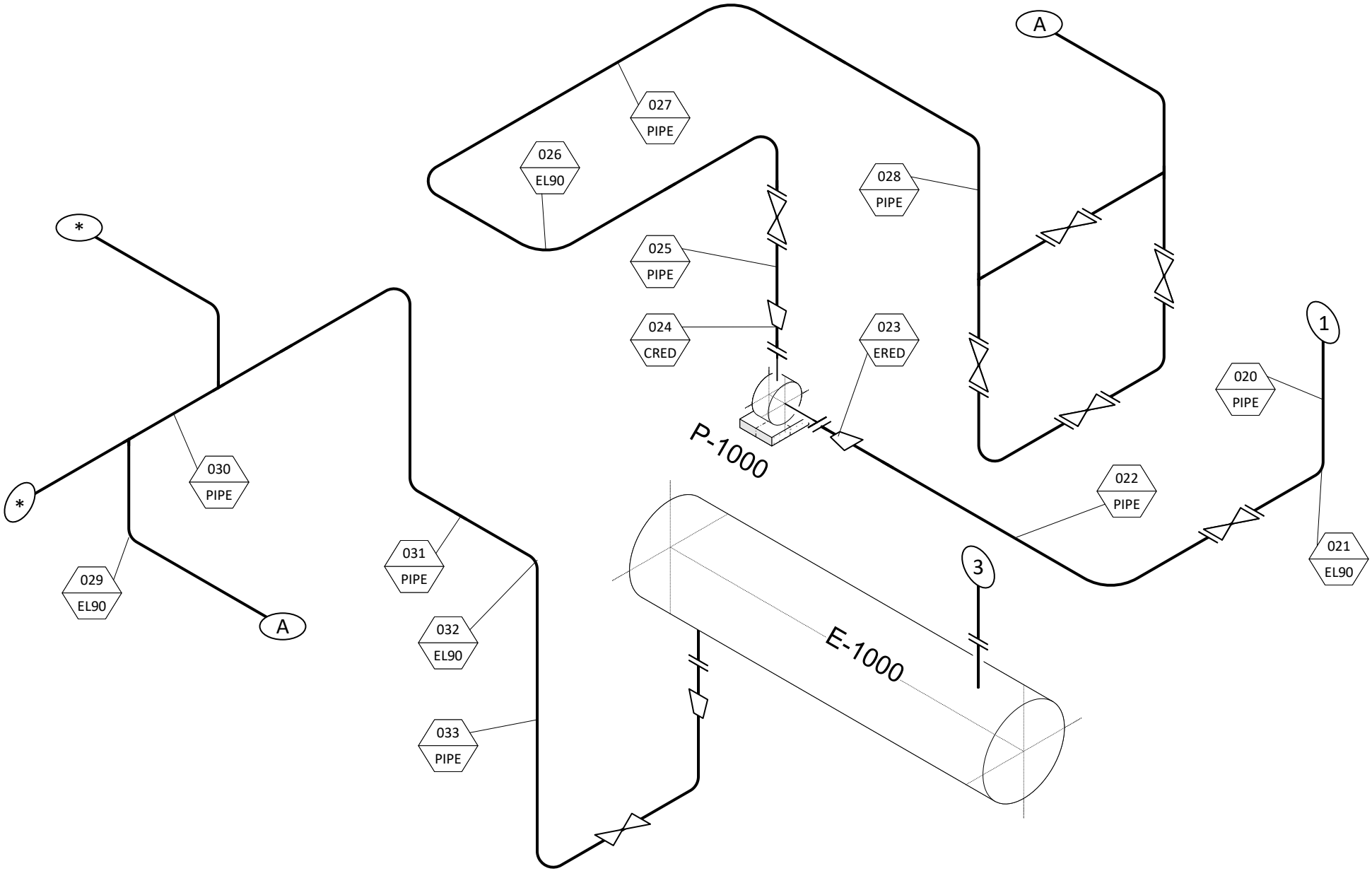

American Petroleum Institute	Drawn By API TR 596	Revised MM/DD/YYYY	Drawing Title SWS-2	Description CML Statistical Analysis EXAMPLE	Page 2 of 6

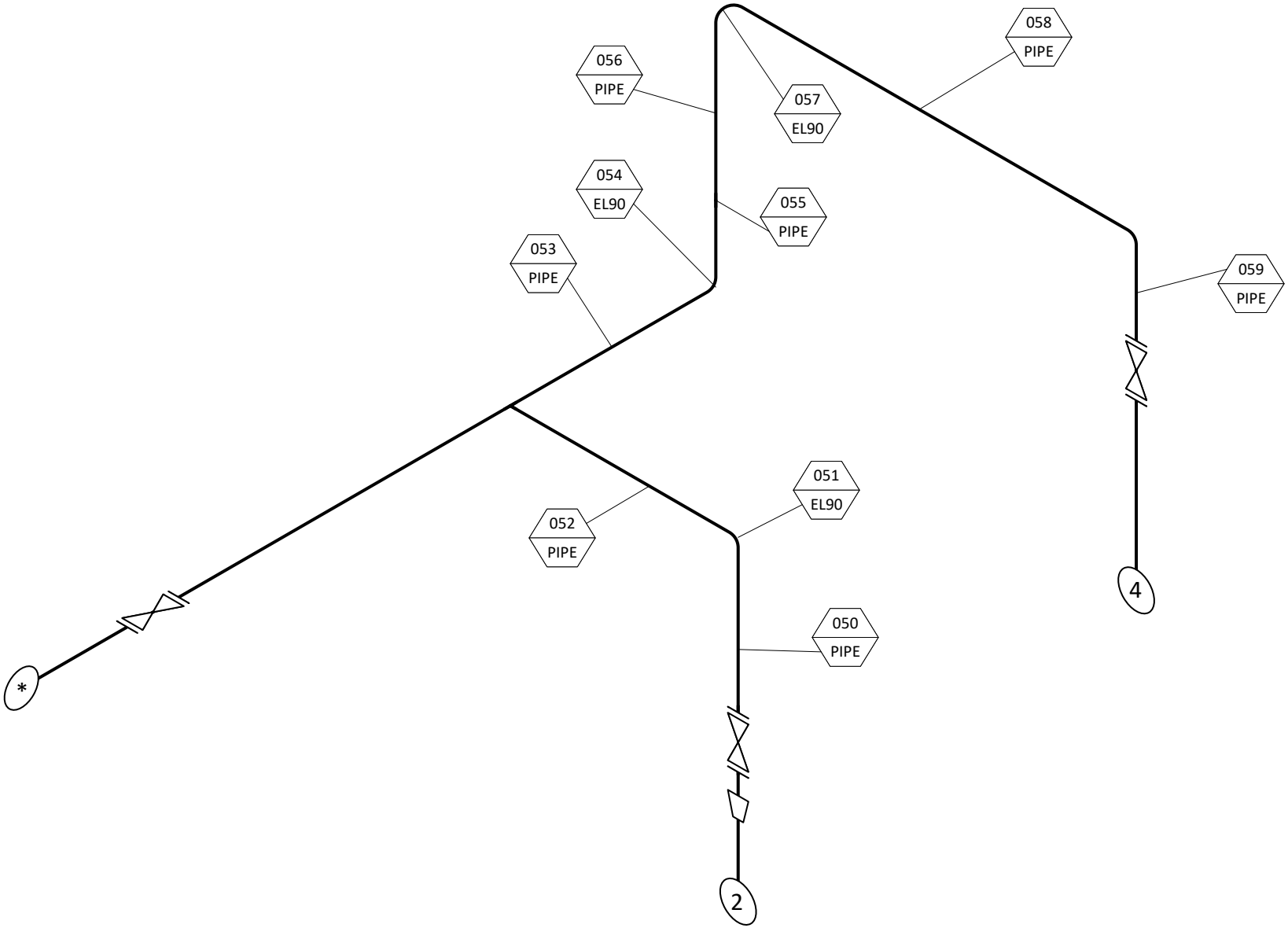

	Drawn By	Revised	Drawing Title	Description	Page
API American Petroleum Institute	API TR 596	MM/DD/YYYY	SWS-3	CML Statistical Analysis EXAMPLE	3 of 6

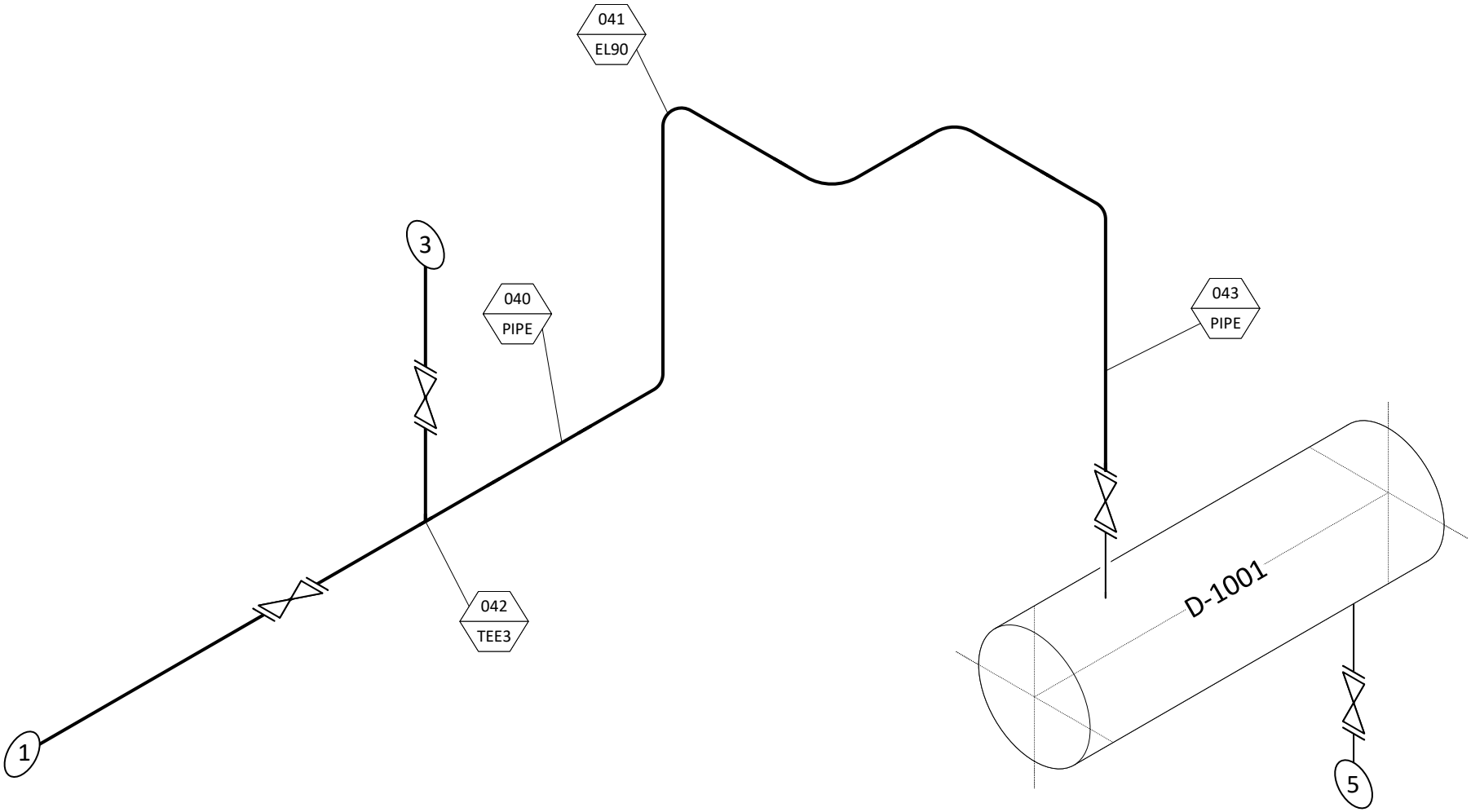

American Petroleum Institute	Drawn By	Revised	Drawing Title	Description	Page
	API TR 596	MM/DD/YYYY	SWS-4	CML Statistical Analysis EXAMPLE	4 of 6

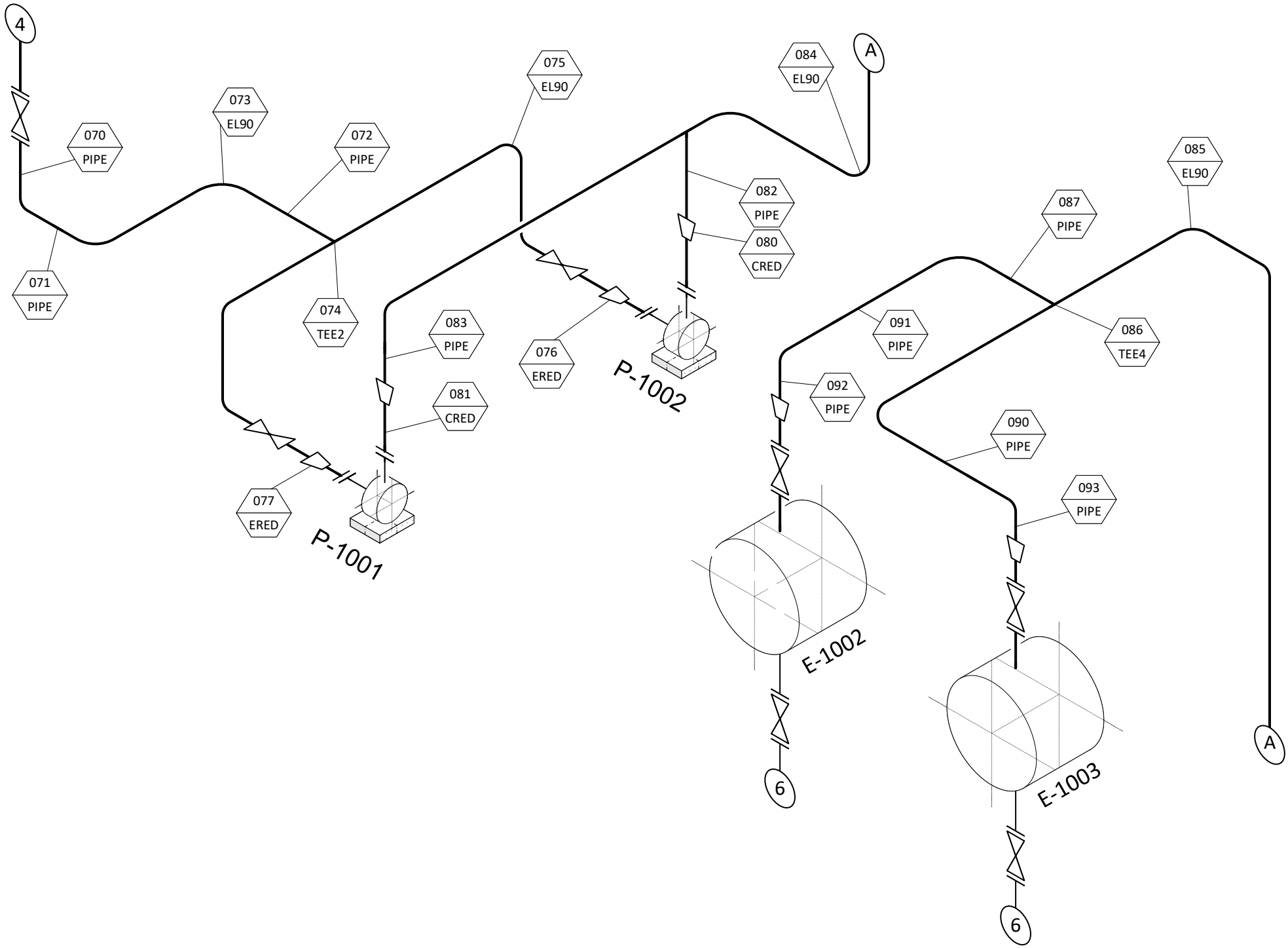

American Petroleum Institute	Drawn By	Revised	Drawing Title	Description	Page
	API TR 596	MM/DD/YYYY	SWS-5	CML Statistical Analysis EXAMPLE	5 of 6

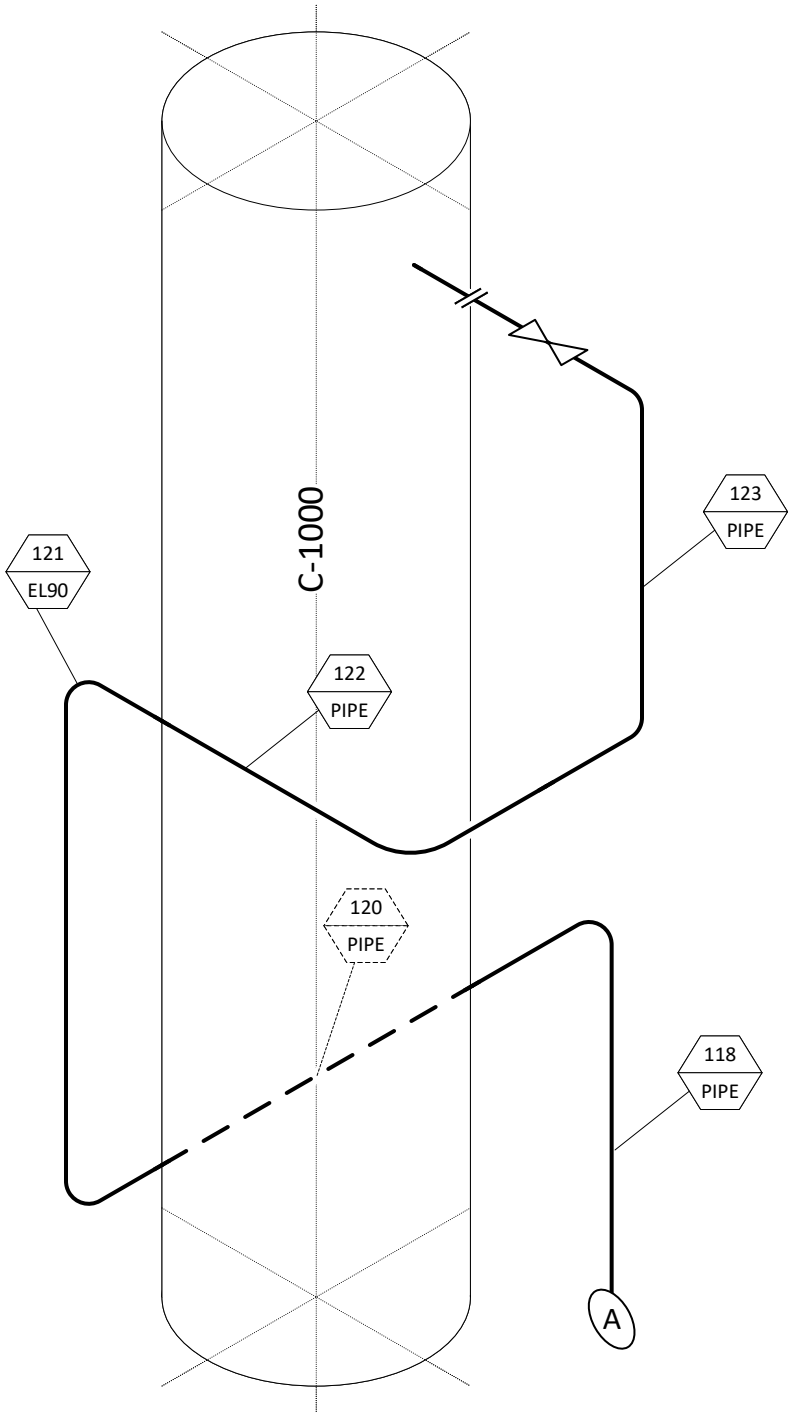

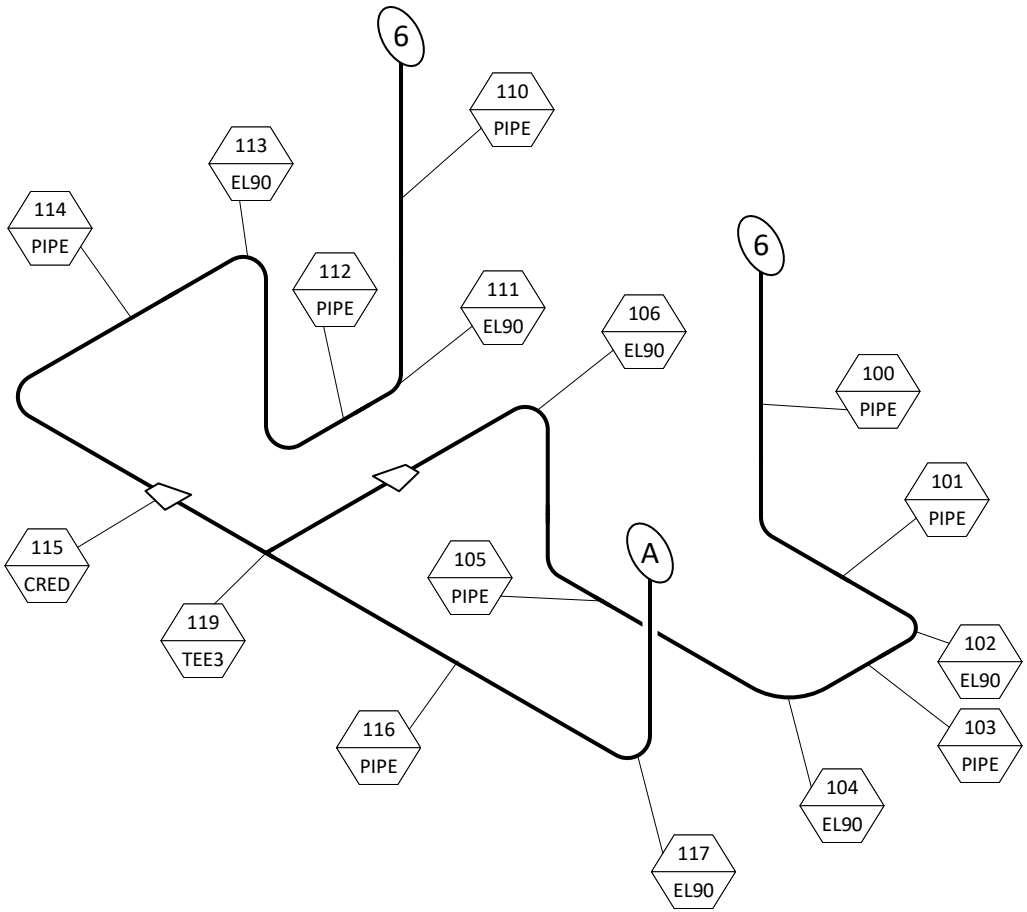

	Drawn By	Revised	Drawing Title	Description	Page
API American Petroleum Institute	API TR 596	MM/DD/YYYY	SWS-6	CML Statistical Analysis EXAMPLE	6 of 6