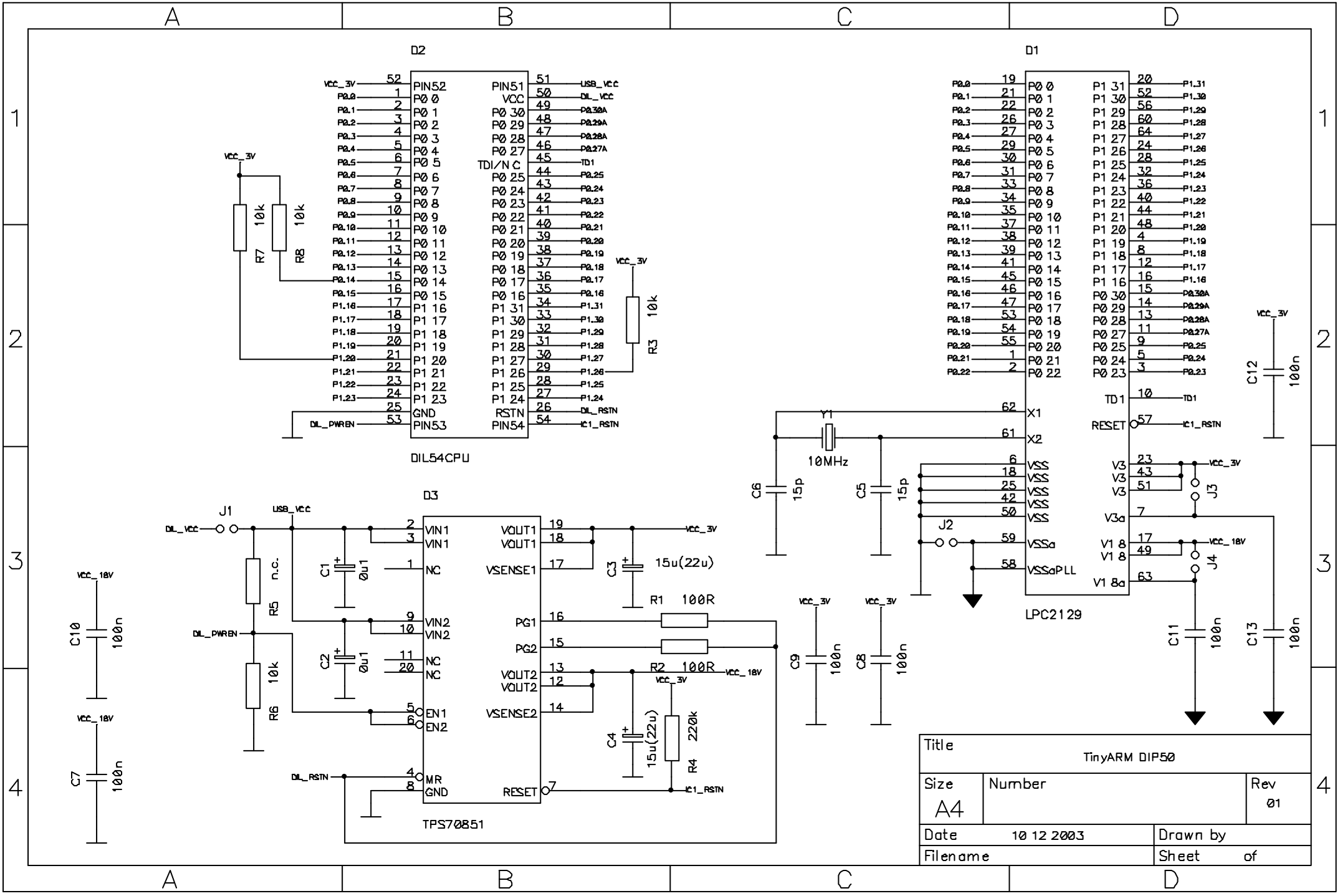
D2
DIL54CPU
D1
LPC2129
D3
TPS70851
J1
J2
J3
J4
Y1
10MHz
R1 100R
R2 100R
R3 10k
R4 220k
R5 n.c.
R6 10k
R7 10k
R8 10k
C1 0u1
C2 0u1
C3 15u(22u)
C4 15u(22u)
C5 15p
C6 15p
C7 100n
C8 100n
C9 100n
C10 100n
C11 100n
C12 100n
C13 100n
VCC_3V
VCC_18V
USB_VCC
DIL_VCC
DIL_PWREN
DIL_RSTN
IC1_RSTN
Title
TinyARM DIP50
Size
A4
Number
Rev
01
Date
10 12 2003
Drawn by
Filename
Sheet of