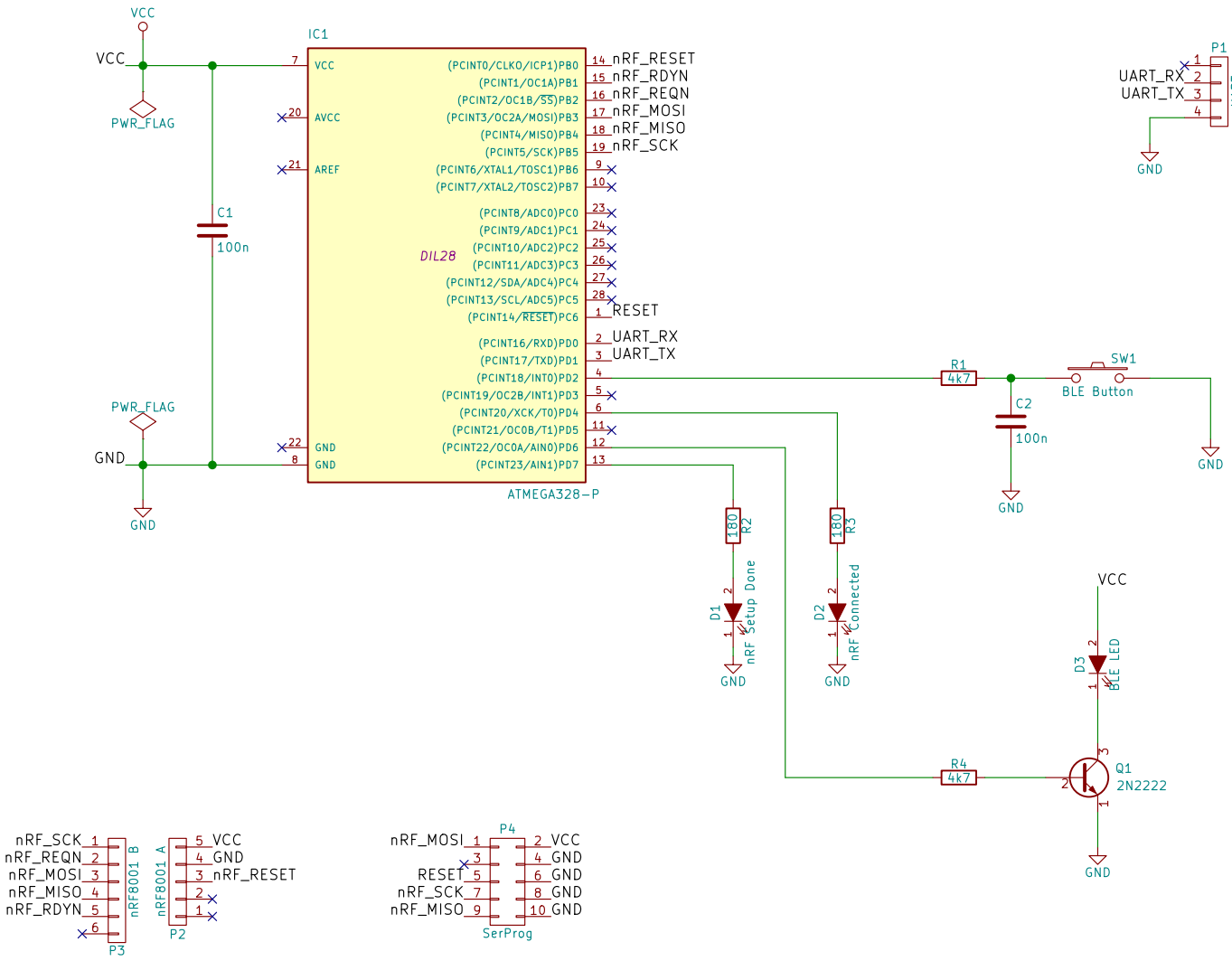

sgreg.fi

Sheet: /

File: avr-nrf8001.sch

Title: AVR nRF8001 Example System

Size: A4	Date: 2017-02-23	Rev: A
KiCad E.D.A. kicad 4.0.2+e4-622538ubuntu15.10.1-stable		Id: 1/1