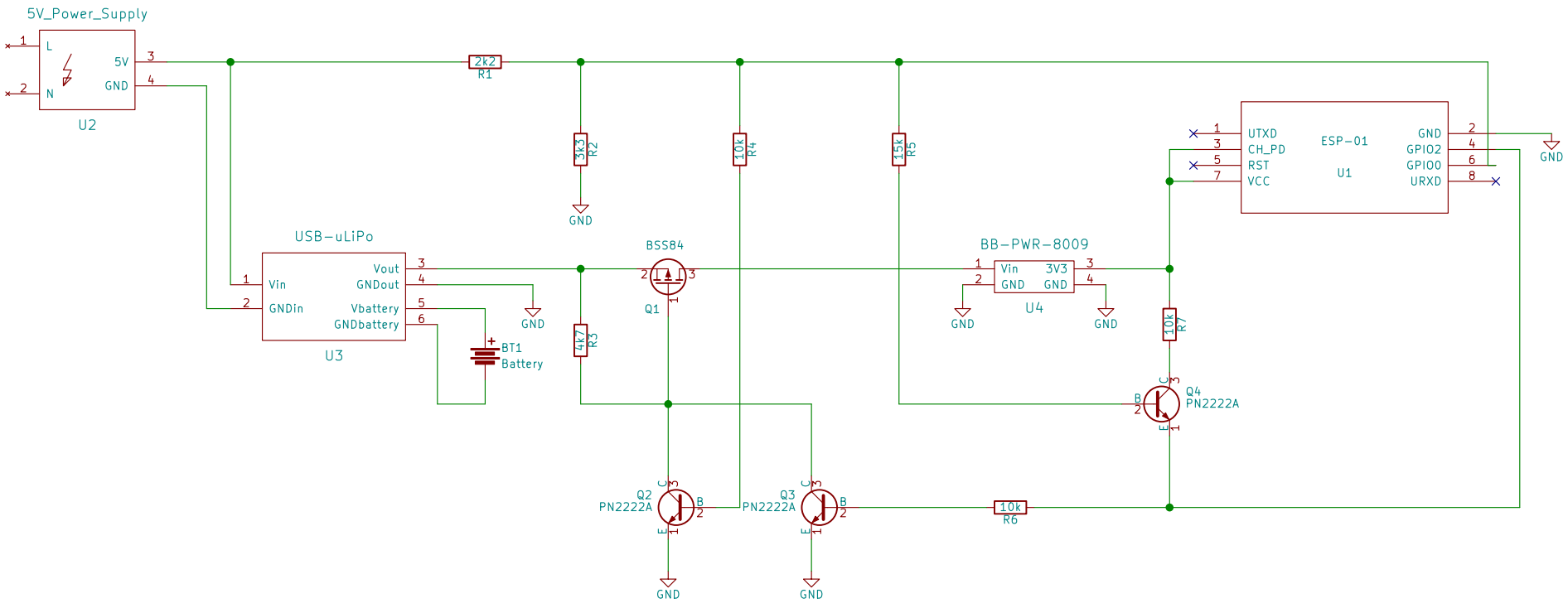

- 5V Power Supply: random mains (230/120V) to 5V switching power supply
- USB-uLiPo battery charger from Olimex, see https://www.olimex.com/Products/Power/USB-uLiPo/
- BB-PWR-8009 3.3V DC DC converter, see https://www.olimex.com/Products/Breadboarding/BB-PWR-8009/

Author: Sven Gregori <sven@craplab.fi>

СГАрLVЪ http://craplab.fi

Sheet: /
File: smartplug.sch

Title: Smartplug

Size: A4	Date: 2017-03-12	**Rev: A**
KiCad E.D.A. kicad 4.0.2+e4-622538ubuntu15.10.1-stable		Id: 1/1