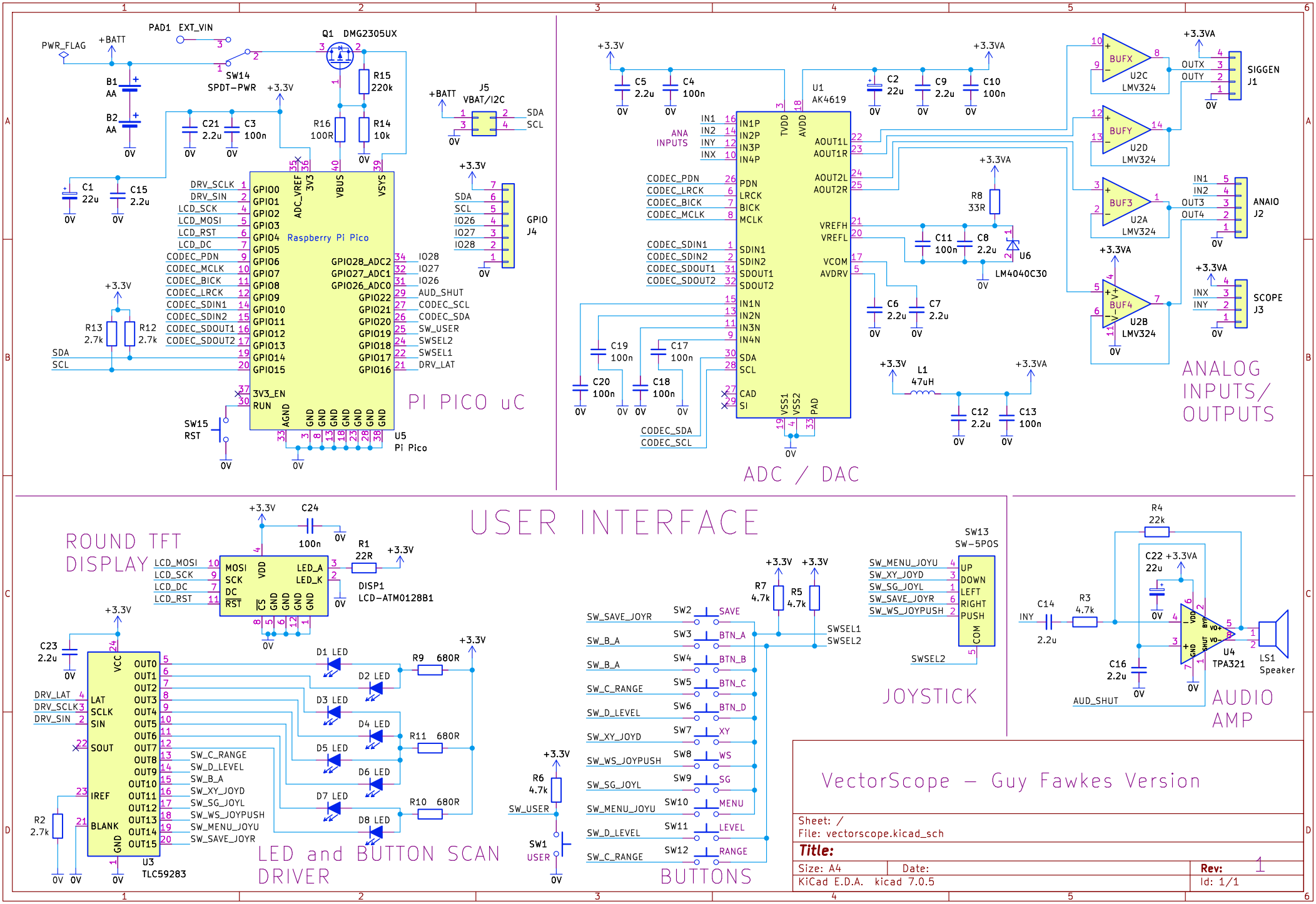
PI PICO uC
Raspberry Pi Pico
U5
Pi Pico
ADC / DAC
U1
AK4619
ANALOG INPUTS/ OUTPUTS
USER INTERFACE
ROUND TFT DISPLAY
DISP1
LCD-ATM0128B1
LED and BUTTON SCAN DRIVER
U3
TLC59283
BUTTONS
JOYSTICK
SW13
SW-5POS
AUDIO AMP
U4
TPA321
LS1
Speaker
VectorScope – Guy Fawkes Version
Sheet: /
File: vectorscope.kicad_sch
Title:
Size: A4
Date:
Rev: 1
KiCad E.D.A. kicad 7.0.5
Id: 1/1