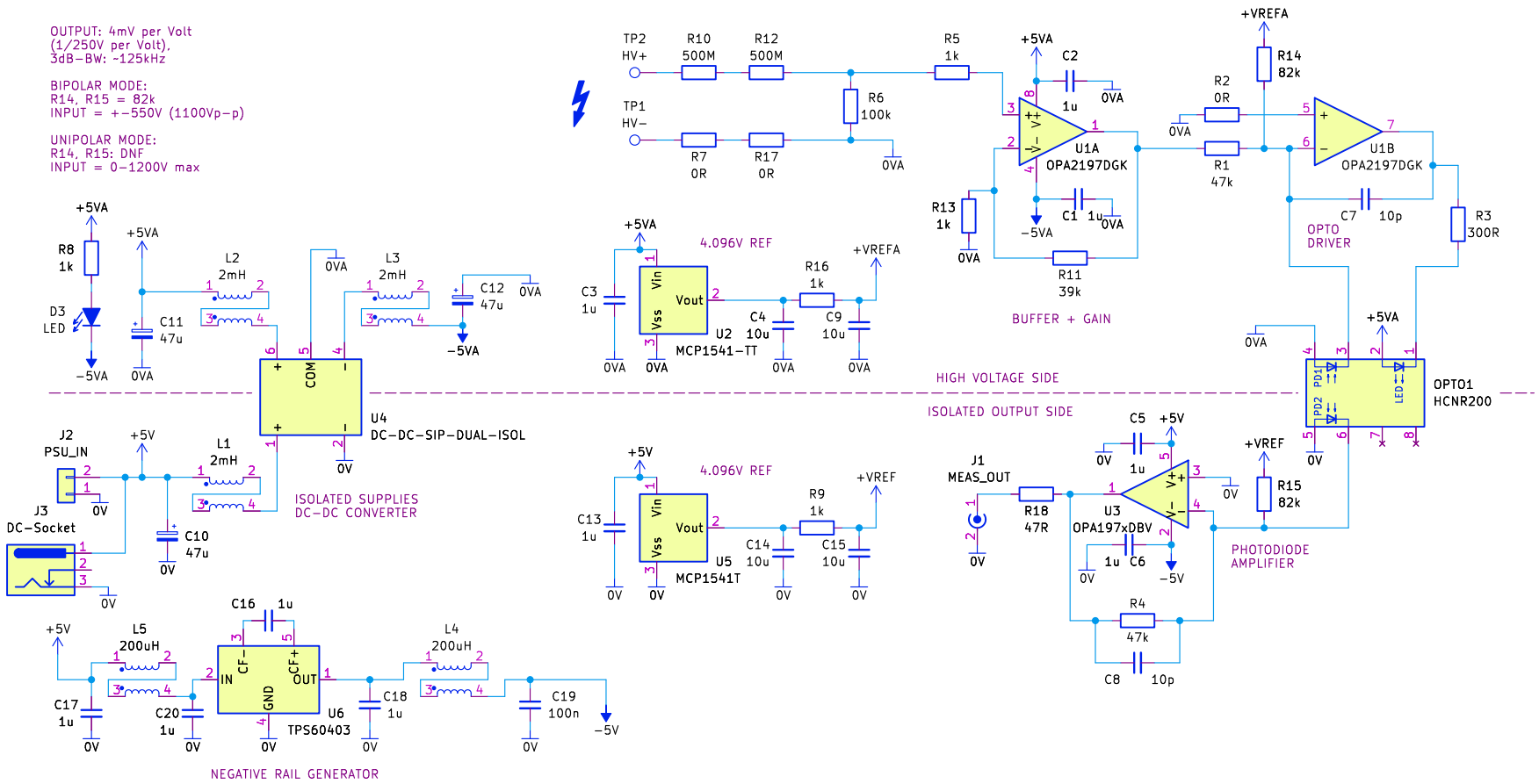

HV Measurement Board

Sheet: /
File: hv-isol-meas.kicad_sch

Title:

Size: A4	Date:	Rev: 1.1
KiCad E.D.A. kicad 7.0.5		Id: 1/1