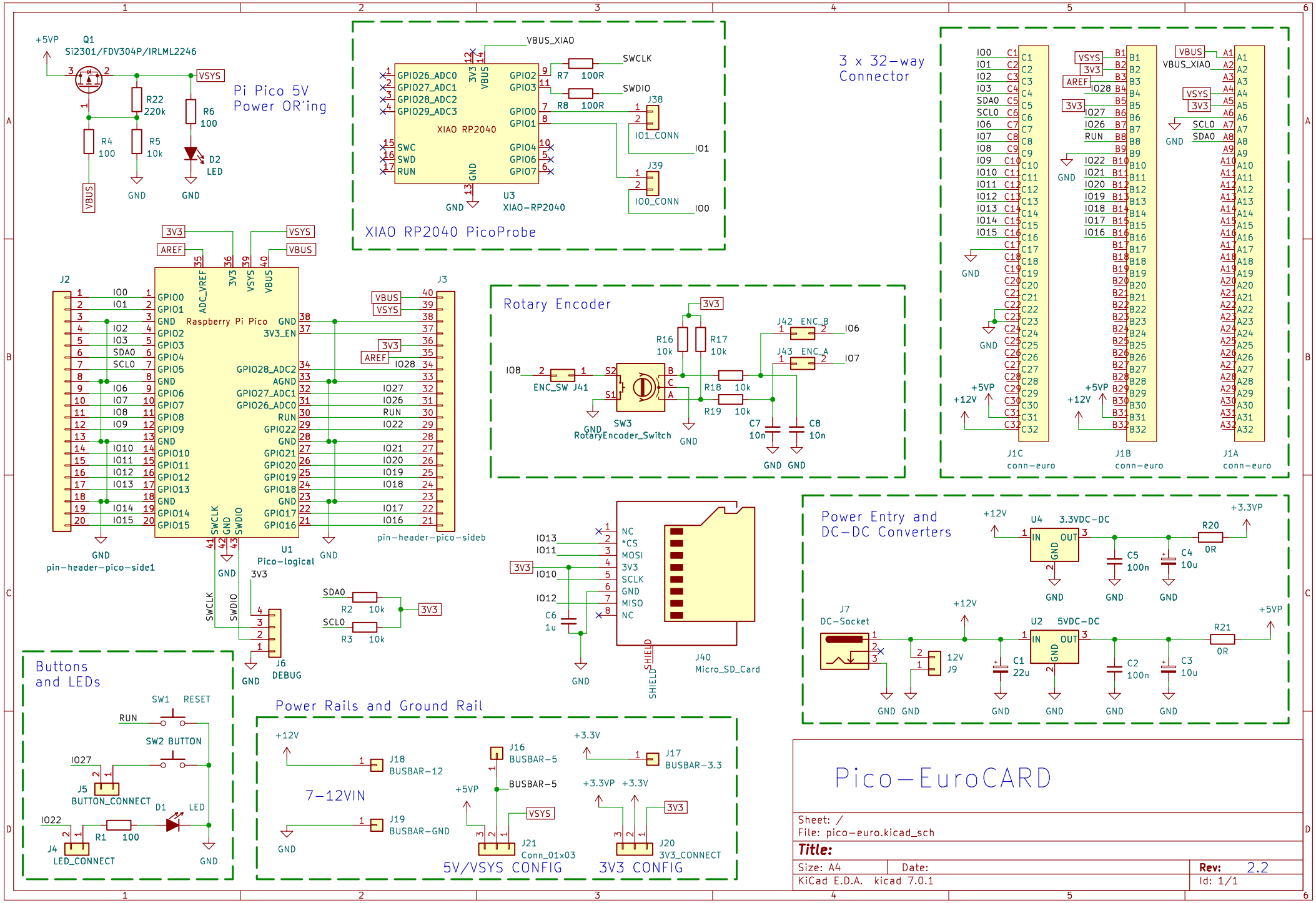
Pi Pico 5V Power OR'ing
Q1
Si2301/FDV304P/IRLML2246
+5VP
VSYS
R22 220k
R6 100
R4 100
R5 10k
D2 LED
VBUS
GND
XIAO RP2040 PicoProbe
VBUS_XIAO
SWCLK
SWDIO
R7 100R
R8 100R
J38
IO1_CONN
J39
IO0_CONN
U3 XIAO-RP2040
3 x 32-way Connector
J1C conn-euro
J1B conn-euro
J1A conn-euro
Raspberry Pi Pico
U1 Pico-logical
J2
J3
pin-header-pico-side1
pin-header-pico-sideb
Rotary Encoder
ENC_SW J41
SW3 RotaryEncoder_Switch
J42 ENC_B
J43 ENC_A
R16 10k
R17 10k
R18 10k
R19 10k
C7 10n
C8 10n
J40 Micro_SD_Card
J6 DEBUG
R2 10k
R3 10k
Power Entry and DC-DC Converters
U4 3.3VDC-DC
U2 5VDC-DC
J7 DC-Socket
J9 12V
R20 0R
R21 0R
C1 22u
C2 100n
C3 10u
C4 10u
C5 100n
Buttons and LEDs
SW1 RESET
SW2 BUTTON
J5 BUTTON_CONNECT
D1 LED
R1 100
J4 LED_CONNECT
Power Rails and Ground Rail
J18 BUSBAR-12
7-12VIN
J19 BUSBAR-GND
J16 BUSBAR-5
J17 BUSBAR-3.3
J21 Conn_01x03
5V/VSYS CONFIG
J20 3V3_CONNECT
3V3 CONFIG
Pico-EuroCARD
Sheet: /
File: pico-euro.kicad_sch
Title:
Size: A4
Date:
Rev: 2.2
KiCad E.D.A. kicad 7.0.1
Id: 1/1