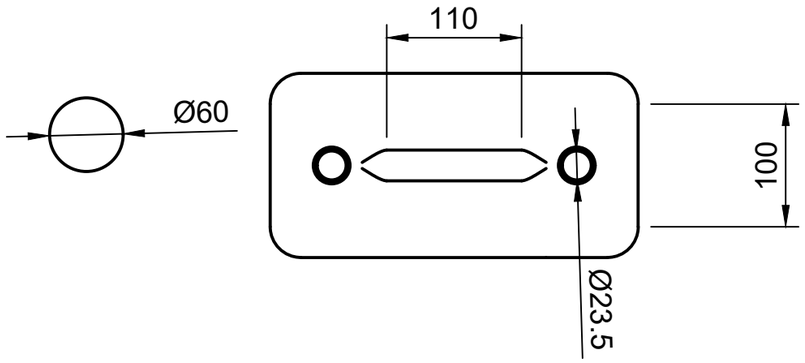

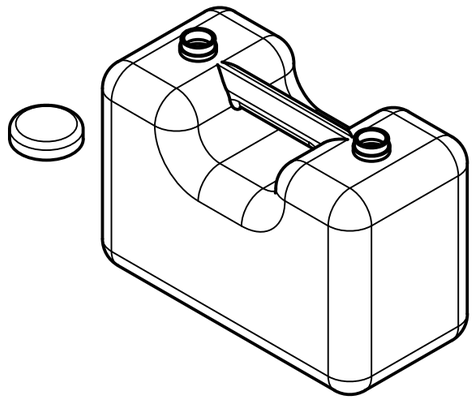

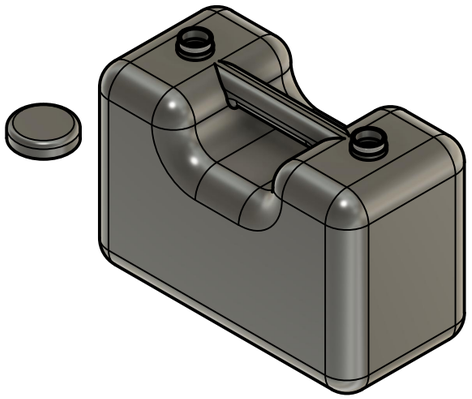

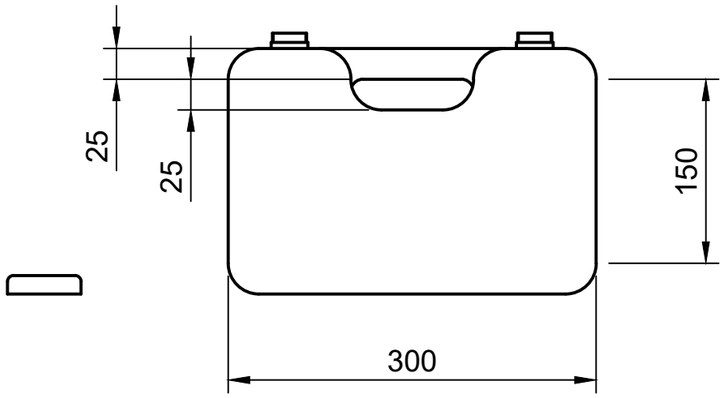

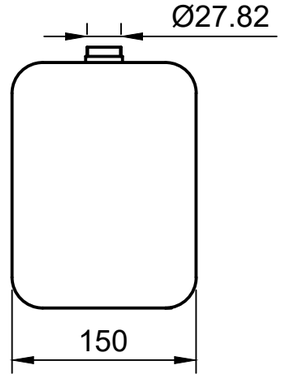

Dept.	Technical reference	Created by HOSSAIN SHAHADAT 3/24/2022	Approved by	
		Document type	Document status	
		Title 無題	DWG No.	
			Rev. / Date of issue	Sheet 1/1