Quiz No. 5 is NEXT WEEK

Lecture 23
EE 421 / CS 425
Digital System Design

Fall 2024

Shahid Masud

Topics

- **Recap** – Path Sensitization Method for Fault Test Generation
- Examples of XOR based test set generation
- Design for testability
- BIST and SCAN technique
- Pseudorandom test vector generation through ALFSR

Quiz No. 5 is NEXT WEEK

Three Steps in Path Sensitization Method

- **Fault Excitation:** Which vector to be induced to detect the suspected SA0 or SA1 fault at the suspicious path
- **Fault Propagation:** Identify path/s through which fault can be propagated to the observable output
- **Back tracking:** Move back from output towards all inputs and assign appropriate test values

Path Sensitization – how to

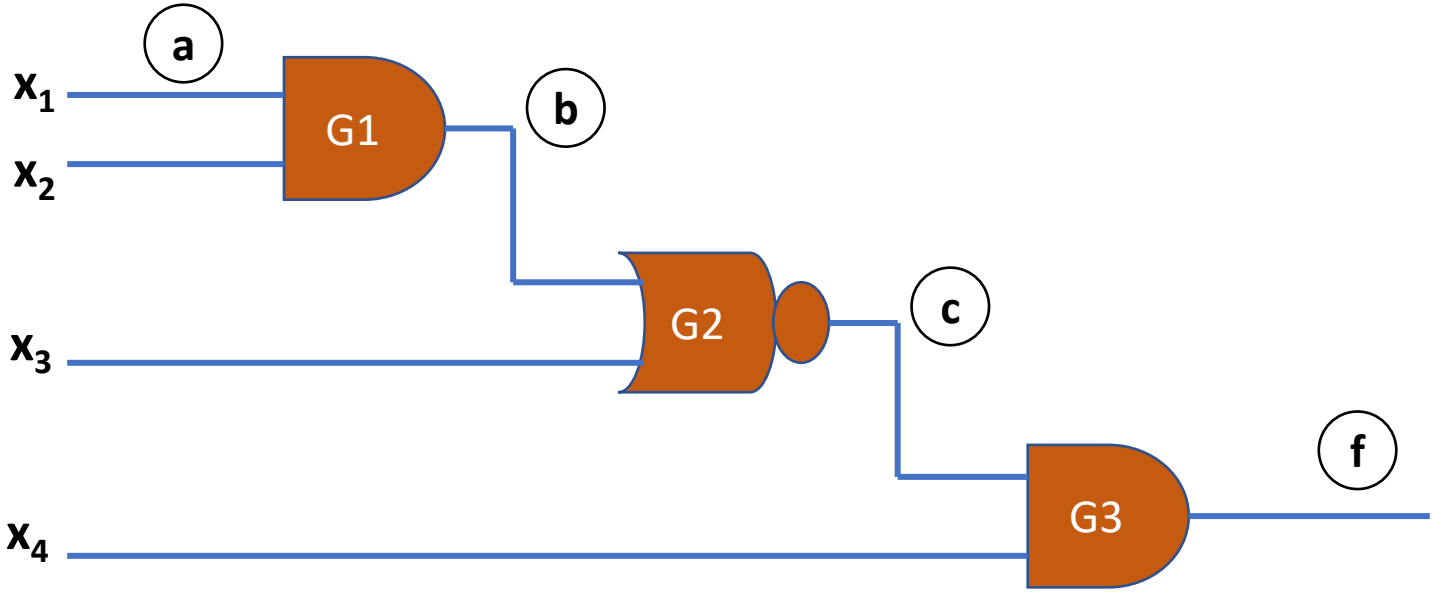

To sensitize a path through an input of AND gate or NAND gate, all other inputs must be set to ‘1’
To sensitize a path through an input of OR gate or NOR gate, all other inputs must be set to ‘0’

Path Sensitization – Example 1

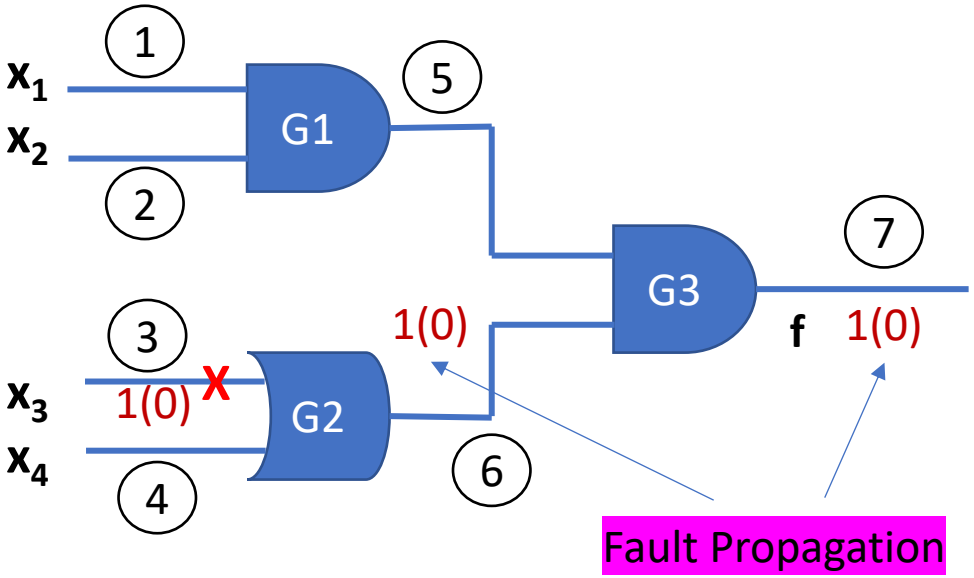

Purpose: To detect SA0 fault at wire 3 connected to input of OR gate
Input x_3 is selected opposite to Stuck-At fault (eg. SA0), written as **x_3=1(0)**
This is fault generation or excitation

Test Vectors for Example 1

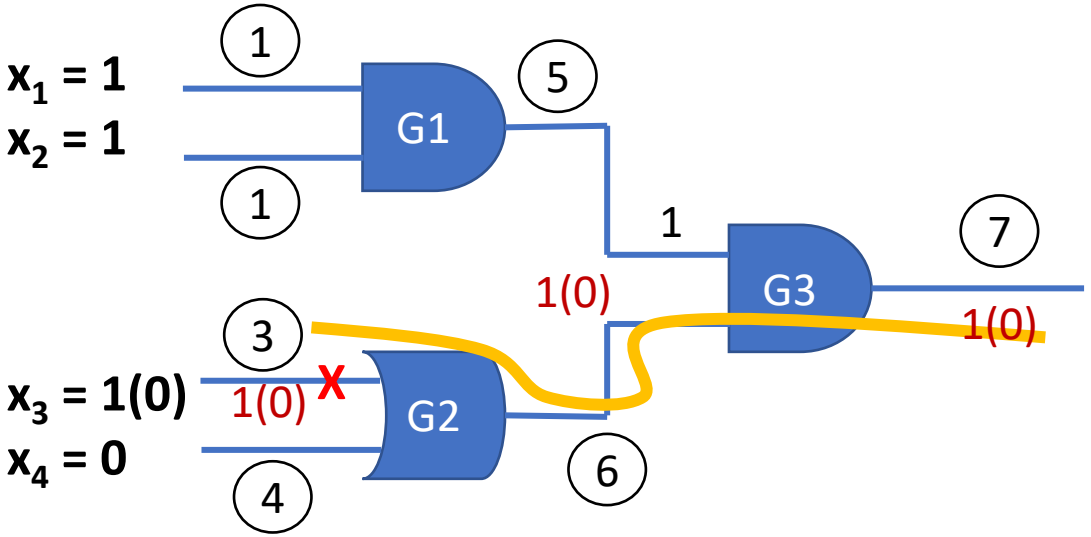

Sensitized path = 3 → 6→ 7
Back tracing reveals inputs to all gates to ensure fault propagation
Required test vector to detect SA0 at wire 3 is **"1110"**

Path Sensitization – Example 2

To detect SA1 fault at wire 2

Two possible paths can be excited

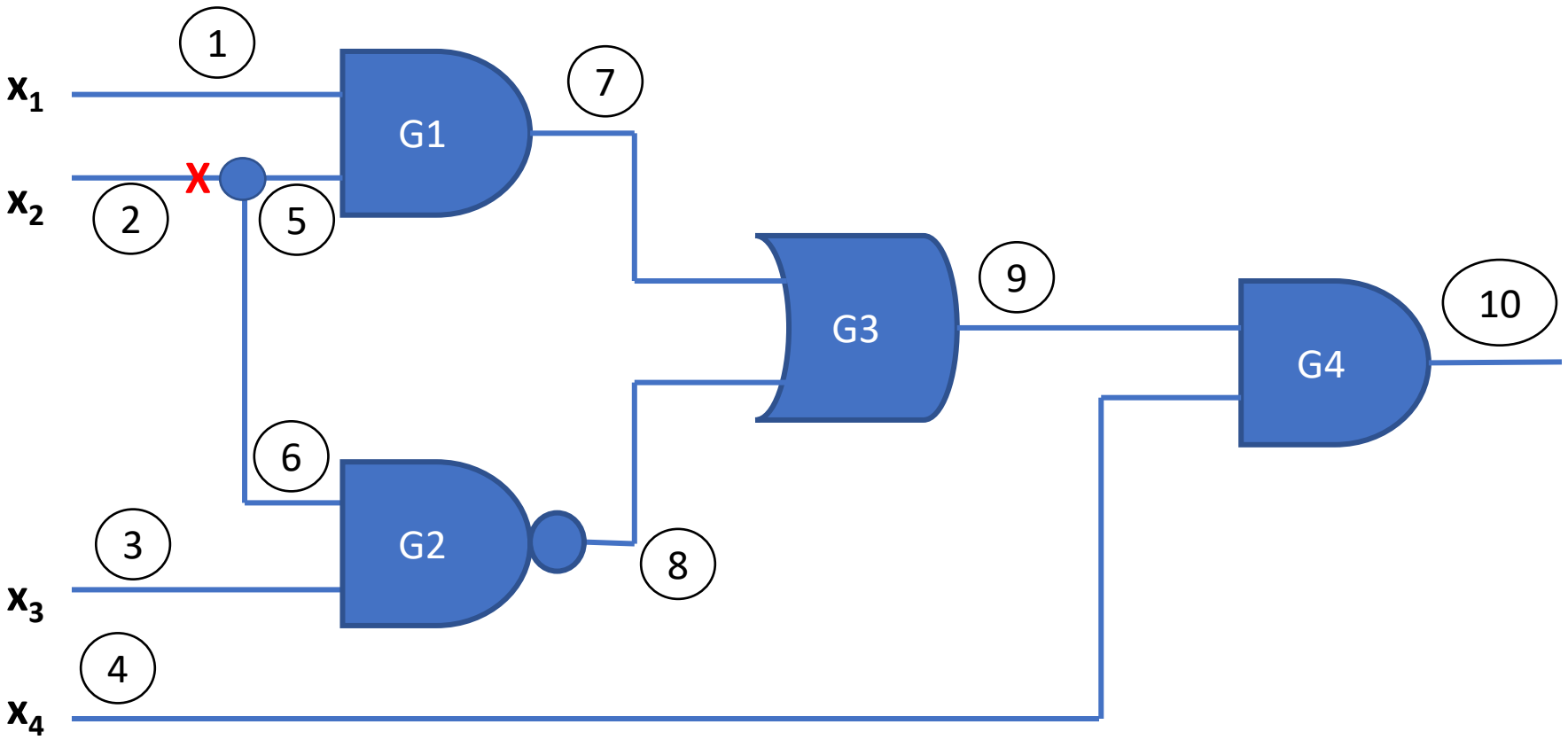

continued

Detect SA1 at path 2

Fault propagation by supplying input **x_2=0(1)**

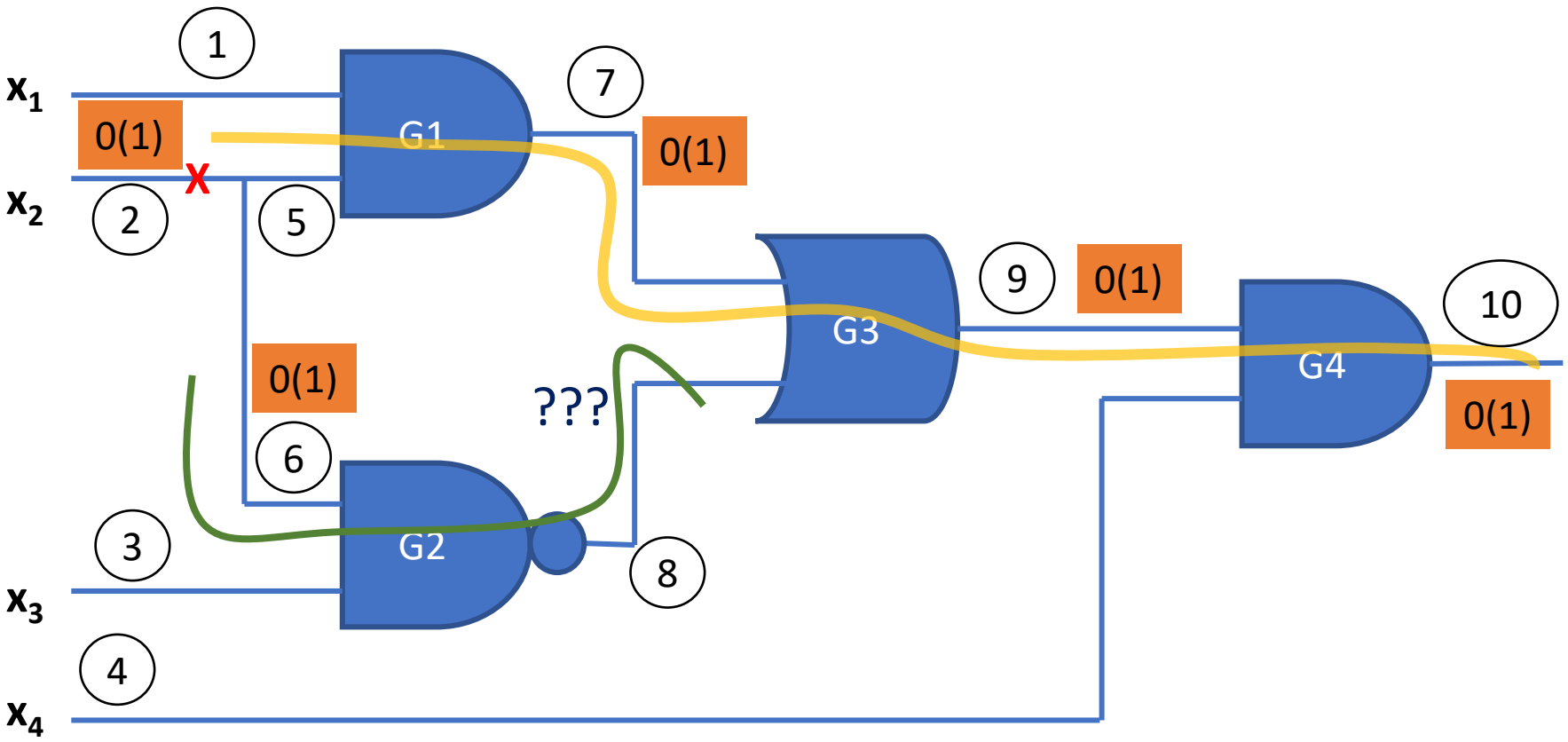

Case 1:

Back tracking reveals:

First Selected path = 2→7 → 9 → 10

But path 8=1 due to path 2 input x_2
This is not correct to have '1' at Path 9. Hence '0' cannot be justified at line 8 and line 2 simultaneously

This situation is 'Inconsistent' hence Some other path is thus required

Continued – final test vectors

Selected path = 2 → 6 → 8 → 9 → 10

Test Vector = “0011”

This test vector can also reveal other faults in wires 6, 8 and 9

In NAND and NOR, reverse fault is propagated

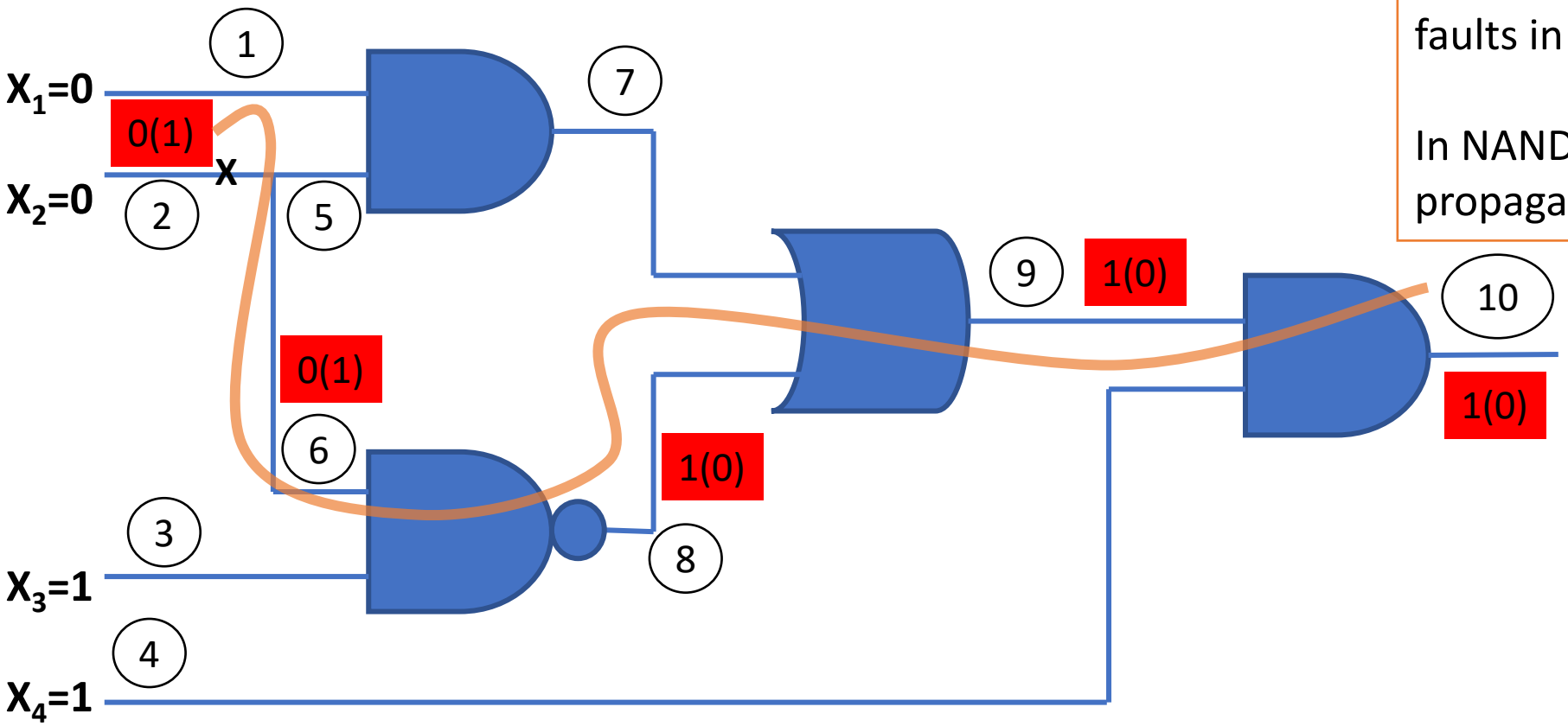

Untestable Fault

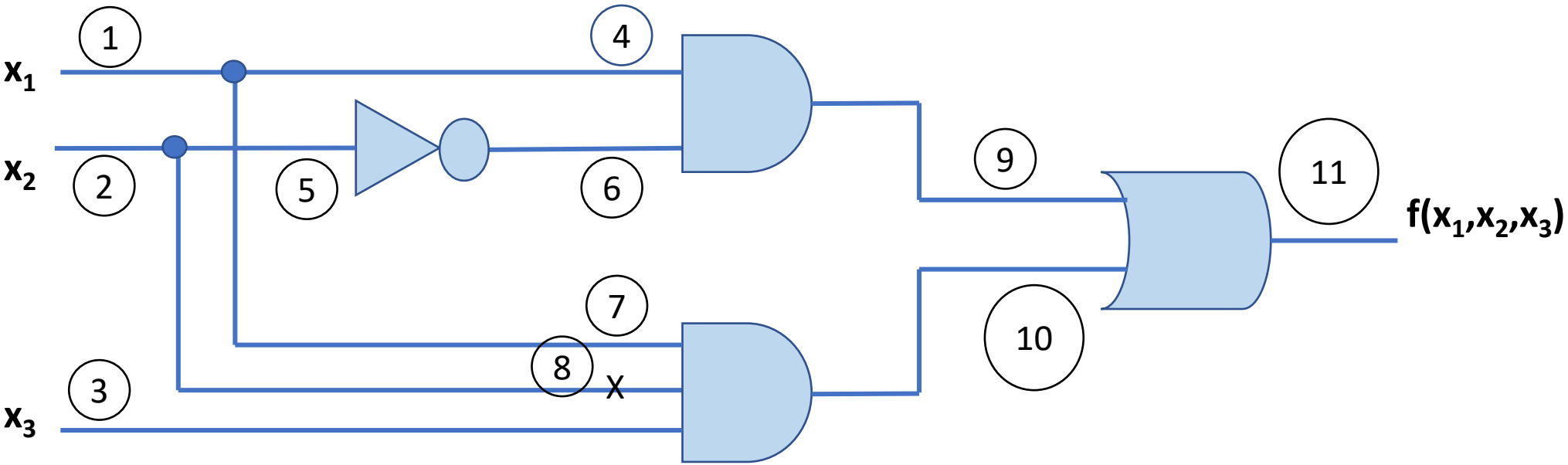

Look at SA1 fault on path 8

This fault cannot be distinguished (sensitized) by changing inputs x1 to x3

Mathematically:

An untestable fault exists when $f^{8/1} \oplus f^{8} = 0$

This condition means it is not possible to test this path

EXOR Method for Fault Test Generation

EXOR Method for Fault Test Generation

Define faulty and fault-free circuit as Boolean expressions
The Exclusive OR of the two functions should be ZERO if they are same i.e. NO FAULT
The Exclusive OR of the two functions should be ONE if there is fault, means different fault propagation

Premise:
Faulty Circuit must produce a different response from a fault-free circuit

Example SA0 fault on wire 3, input to OR gate in circuit below:

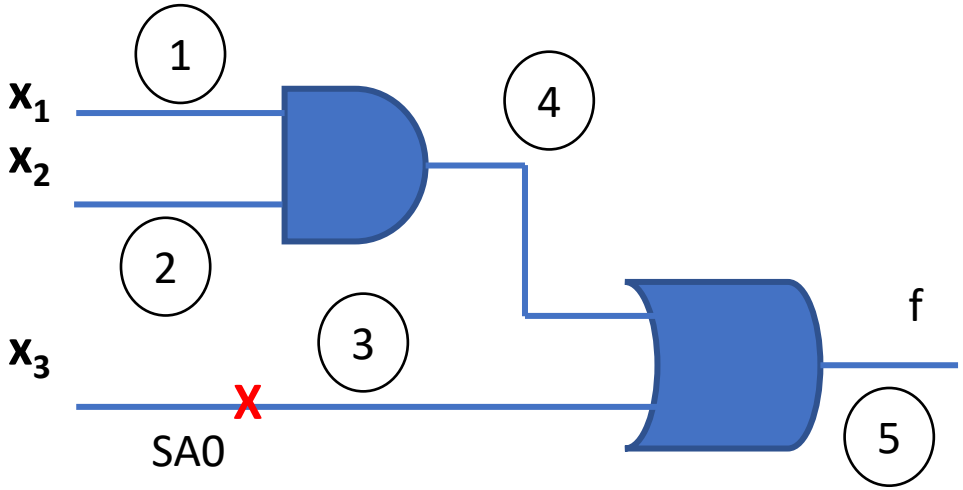

EXOR method using Boolean Algebra

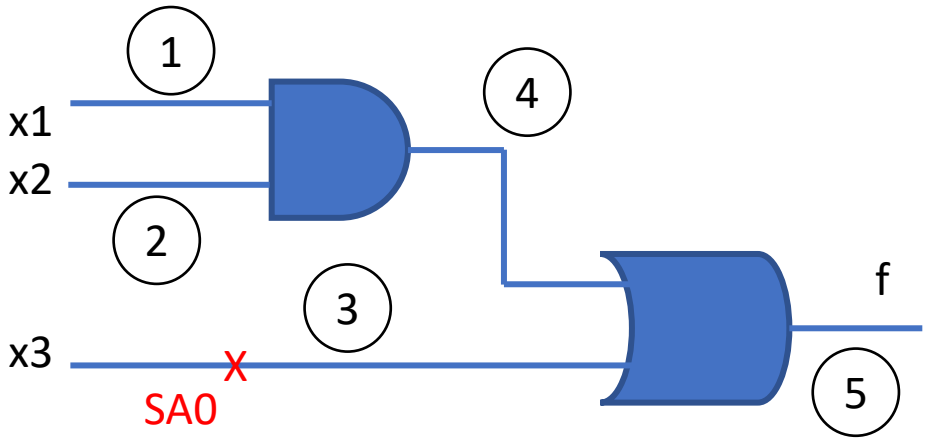

$F^{1/0} = f \oplus f^{1/0}$

$=(x1.x2 + x3) \oplus (x3)$

$=x1.x2.x3'$

$\Longrightarrow$ test vector = 110

Similarly, test for 3/0 is:

$F^{3/0} = (x1.x2 + x3) \oplus (x1.x2)$

$= (x1' + x2').x3$

$= (x1'.x3 + x2'.x3)$

Thus tests are: 001, 011, 101

Solution

$$= x_1 x_2 x_3$$

$$f \oplus f^{3/0} = (x_1 x_2 + x_3) \oplus (x_1 x_2)$$

$$= (x_1 x_2 + x_3)' \cdot (x_1 x_2) + (x_1 x_2 + x_3) \cdot (x_1 x_2)'$$

$$= \left((x_1 x_2)' \cdot (x_3)'\right)(x_1 x_2) + (x_1 x_2 + x_3)(\overline{x_1} + \overline{x_2})$$

$$= 0 + \boxed{\overline{x_1} x_3 + \overline{x_2} \cdot x_3}$$

EXOR Method – The steps involved

- Step 1: Construct truth table of fault-free ‘f’ and faulty ‘ $f^{p/d}$ ’
- Step 2: Compute $f \oplus f^{p/d}$ for each row of the truth table
- Step 3: Tests (input vectors) for fault p/d are indicated by the ones in the columns corresponding to $f \oplus f^{p/d}$
- Step 4: By expressing f and $f^{p/d}$ in Boolean algebra, an expression that gives all tests for p/d can be determined

Draw Fault Table – shows a set of faults and a set of inputs

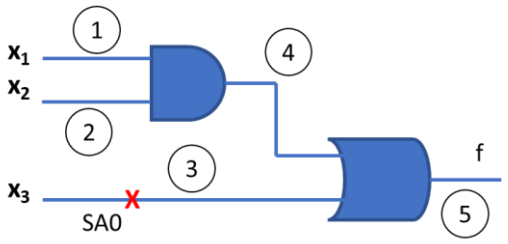

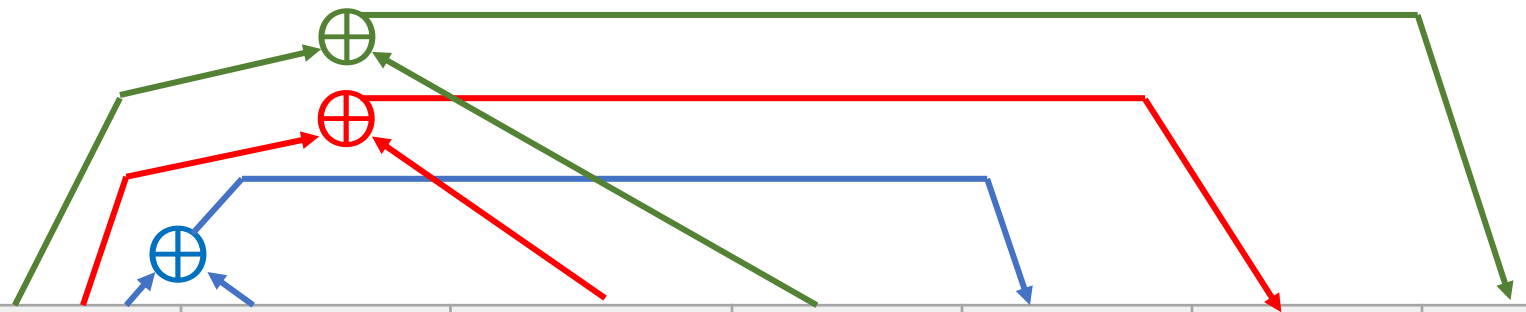

Tests (inputs)			f output	$f^{1/0}$	$f^{2/1}$	$f^{3/0}$	$f \oplus f^{1/0}$	$f \oplus f^{2/1}$	$f \oplus f^{3/0}$
x_1	x_2	x_3		SA0 at 1	SA1 at 2	SA0 at 3			
0	0	0	0	0	0	0	0	0	0
0	0	1	1	1	1	0	0	0	1
0	1	0	0	0	0	0	0	0	0
0	1	1	1	1	1	0	0	0	1
1	0	0	0	0	1	0	0	1	0
1	0	1	1	1	1	0	0	0	1
1	1	0	1	0	1	1	1	0	0
1	1	1	1	1	1	1	0	0	0

Checking Testability through EXOR equations

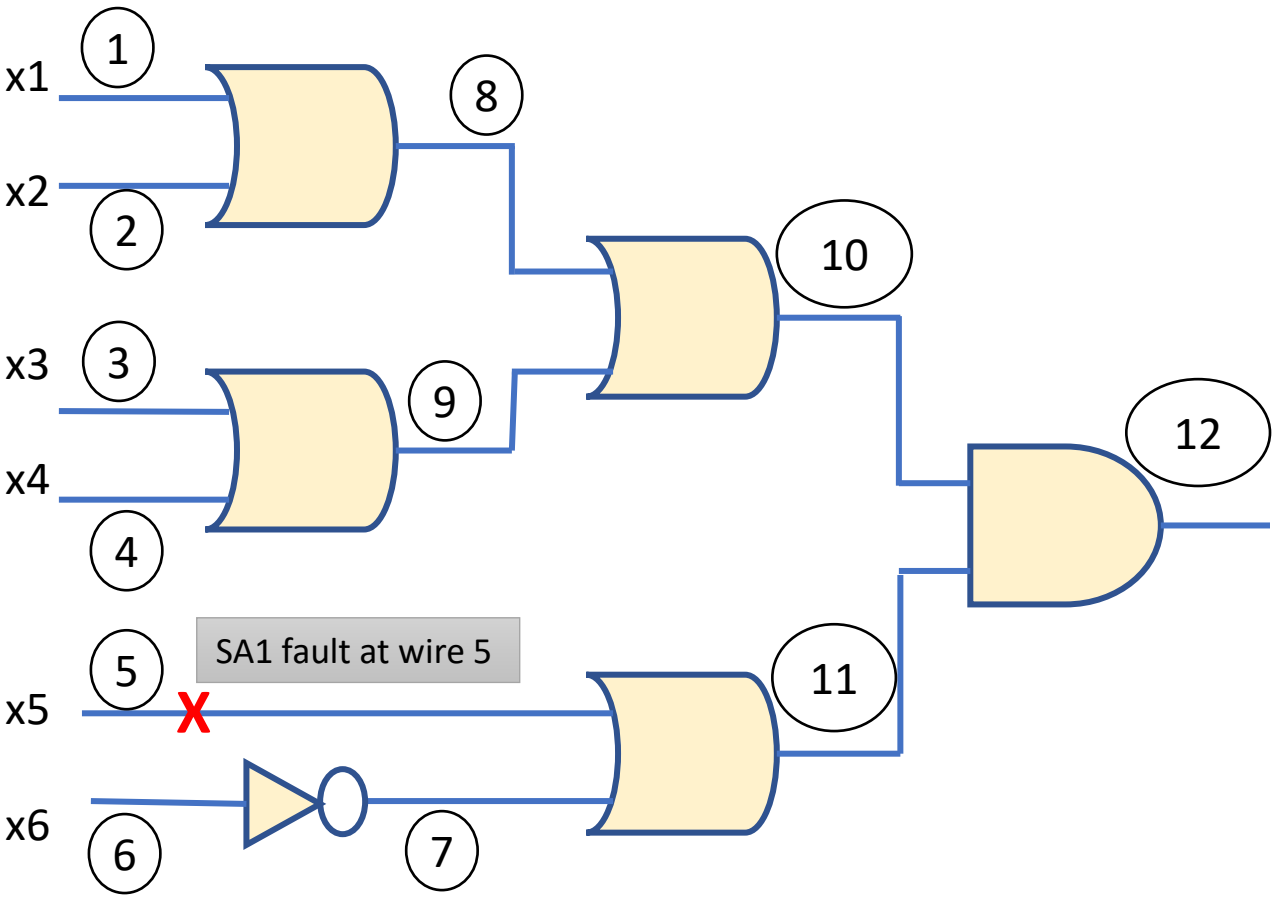

$f=(x1+x2+x3+x4)(x5+x6')$

$f^{6/0} = (x1+x2+x3+x4).1$

Test vector $F^{6/0} = f \oplus f^{6/0}$

$= [(x1+x2+x3+x4).(x5+x6')] \oplus [(x1+x2+x3+x4).1]$

$=A'.B + A.B'$

Note: $(x1+x2....).(x5+..).(x1+x2....)' = 0$

$= (x1+x2+x3+x4)(x5'.x6)$

$=x1x5'x6 + x2x5'x6 + x3x5'x6 + x4x5'x6$

Many tests vectors are there for $f^{6/0}$

Eg. 100001, 010001, 001001, 000101

$$F^{6/0} = f \oplus f^{6/0} = \left[(x_1+x_2+x_3+x_4)(x_5+\overline{x_6})\right] \oplus \left[(x_1+x_2+x_3+x_4)\right]$$

$$= \left[(x_1+x_2+x_3+x_4)(x_5+\overline{x_6})\right]' \cdot \left[x_1+x_2+x_3+x_4\right]$$

$$+ \left[\underline{(x_1+x_2+x_3+x_4)}(x_5+\overline{x_6})\right] \cdot \underline{(x_1+x_2+x_3+x_4)'}$$

$$= \left[\underline{(x_1+x_2+x_3+x_4)'} + (x_5+\overline{x_6})'\right] \cdot \underline{(x_1+x_2+x_3+x_4)}$$

$$= (x_5+\overline{x_6})' \cdot (x_1+x_2+x_3+x_4)$$

$$= (x_5' \cdot x_6)(x_1+x_2+x_3+x_4) = x_1\overline{x_5}x_6 + x_2 x_5' x_6$$

$$+ x_3 \overline{x_5} x_6 + x_4 \cdot \overline{x_5} \cdot x_6$$

Design for Testability – Built-In Self Test BIST

Design for Testability – Built-In Self Test BIST

- Design for testability means that the **designer** introduces such features in design that can be later used for testing and debugging of circuits inside the chip
- Special circuit elements that participate in the application of test vectors and capturing of results are integrated into the design
- Both sequential and combinational circuits can be tested

Sequential Machines with Scan Circuits

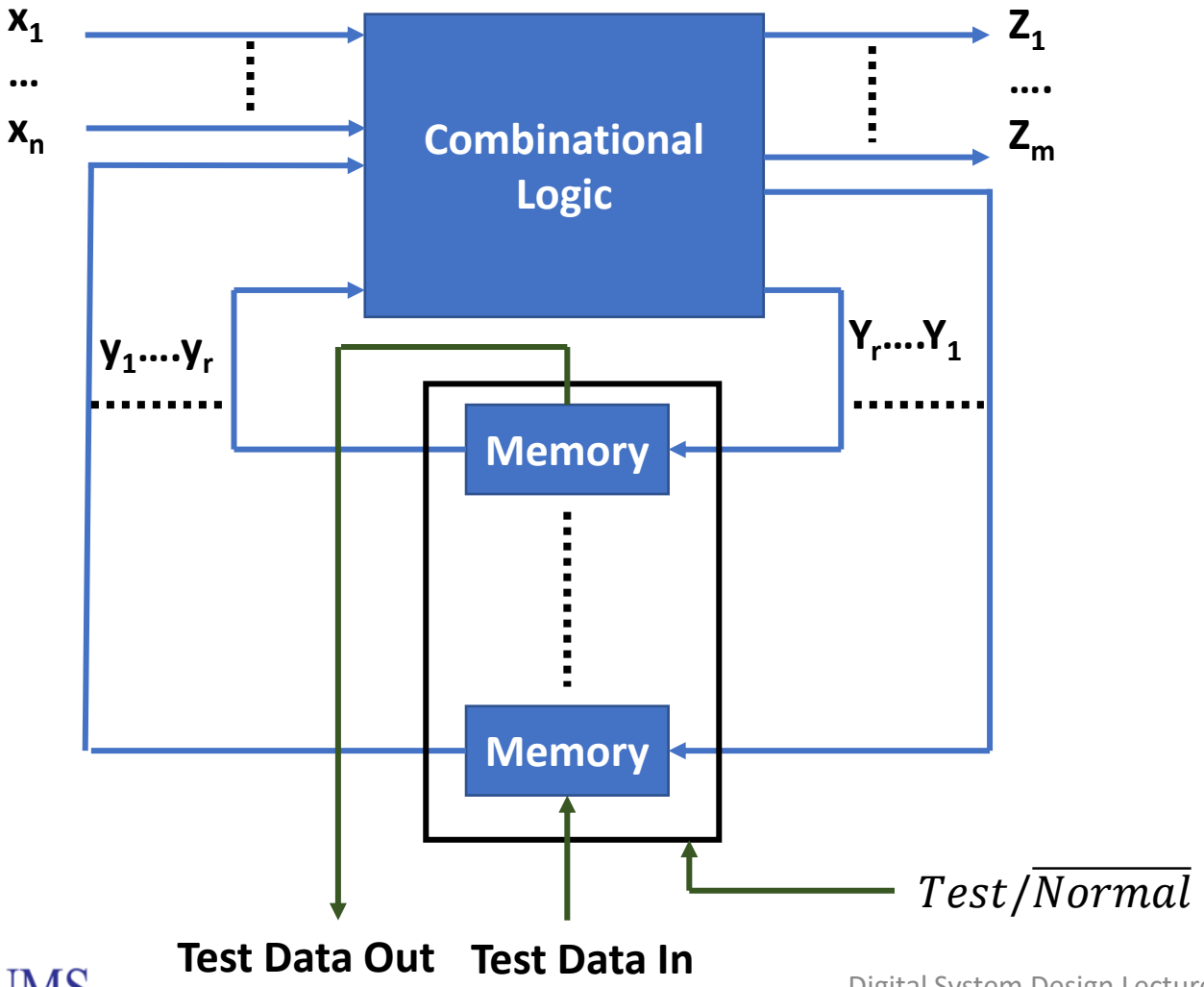

- Test/Normal' isolates flipflops from internal Combinational logic and inputs x1…xn
- Special I/O Test Data In and Test Data out Provide a known signature pattern that is Driven into the scan chain formed by connecting Inputs and outputs of all flipflops
- The received data at Test Data Out is compared With string provided at Test Data In after r clock cycles

Scan Path operation for testing state machines

- Allows testing of combinational and sequential logic
- Set $Test/\overline{Normal}$ mode to Test
- Shift pattern into y1,y2,….,y4 into flip flops through Scan Input to put them into known defined state
- Apply input pattern through primary inputs x1,x2,….,xn
- Observe primary outputs z1,z2,…,zm
- Set $Test/\overline{Normal}$ to Normal mode
- Clock the circuit to force one transition,
- ….. And so on

BIST – Built In Self Test

- Test pattern generator at Scan Input port as well as response capture and comparison circuitry is placed inside the chip. Thus testing can be done without any other external mechanism, setting appropriate test mode on chip
- Pseudorandom test patterns are generated using ALFSR (Autonomous Linear Feedback Shift Register) circuits. These are applied at Scan In as well as inputs to combinational logic blocks
- Data from primary output is captured and compressed by MISR (multi input signature register)
- Scan Output is captured and compressed by SISR (Serial Input Shift Register)

Designing with BIST Circuits

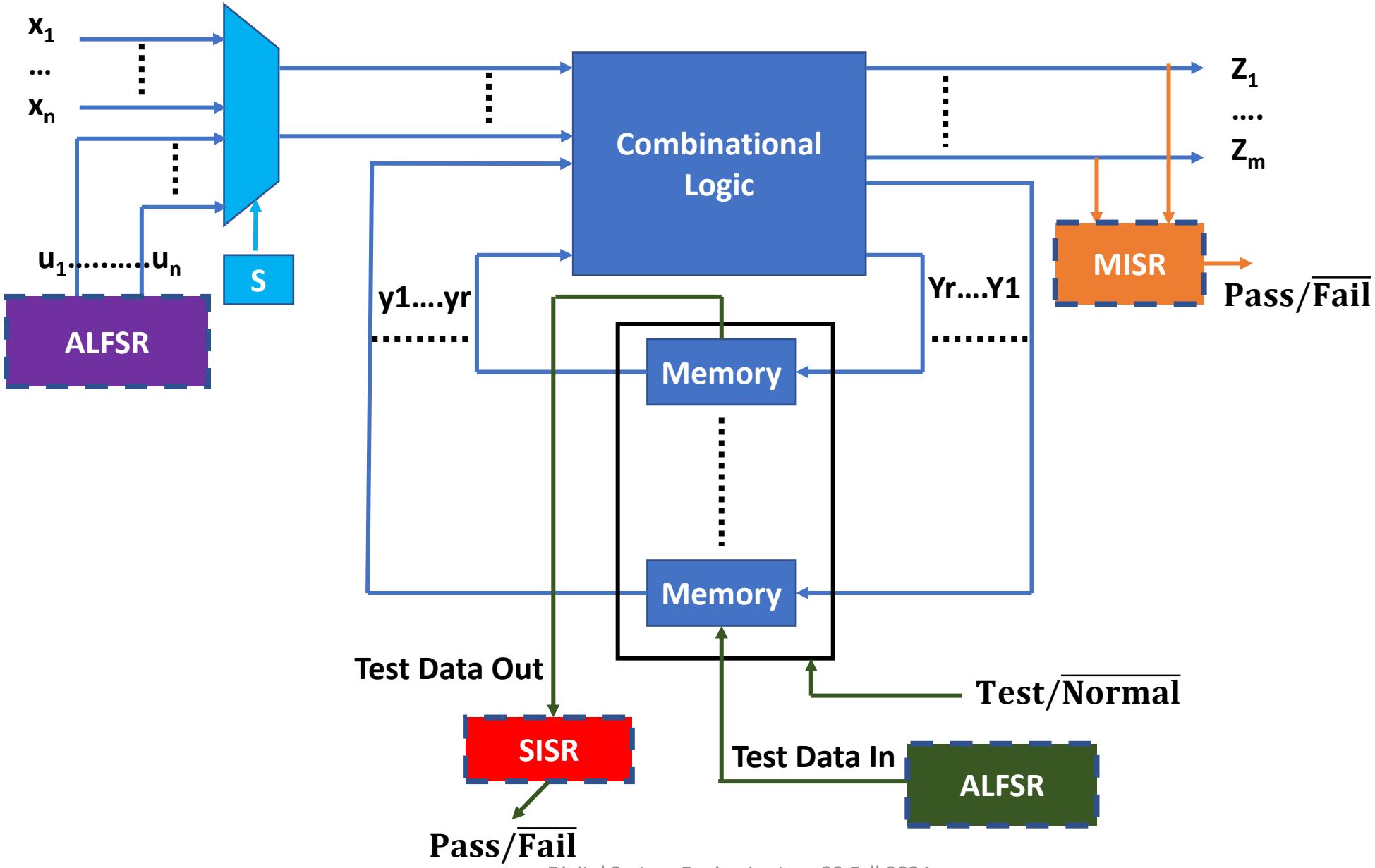

Scan Path Register Design

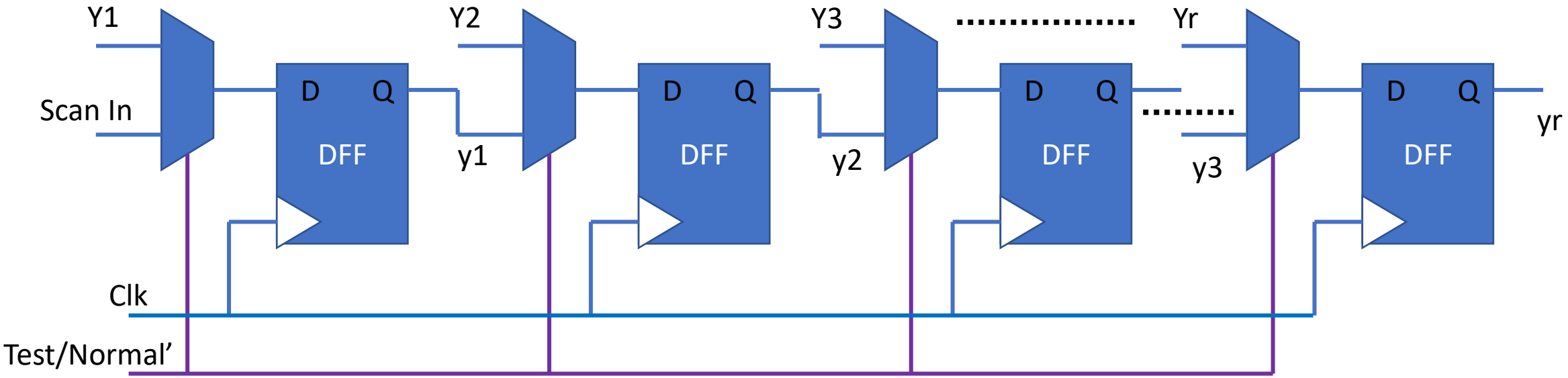

- y1, y2, …., yr are inputs to combinational logic
- A 2:1 Multiplexer is added to the input of each flip flop
- In Normal' mode, the Y1, Y2,…., Yr inputs are connected to the D input of flip flops
- In Test mode, each flip flop is connected to the output of previous flipflop, forming scan chain
- Serial shift register formed in Test mode is called 'Scan Path'

Pseudorandom Test Pattern Generation

- Uses ALFSR – Autonomous Linear Feedback Shift Register
- An n-stage ALFSR produces a periodic pseudorandom sequence of n-bit binary numbers according to a special generating function that is realized through feedback lines and XOR gates within the ALFSR
- $a_{n-1}, a_{n-2},\ldots,a_0$ are the outputs of the n flip flops of the n-bit shift register with 'an' the input to the shift register equal to the exclusive OR of the feedback signals:

i.e. $a_n = \sum_{i=o\oplus}^{n-1} a_i\, c_i$

$= a_0c_0 \oplus a_1c_1 \oplus a_2c_2 \oplus \ldots\ldots \oplus a_{n-1}c_{n-1}$

The coefficients $c_0, c_1, \ldots, c_{n-1}$ represent the primitive polynomial p(x)

C_i=1 means flip flop output ai is connected to flip flop input through the Exclusive OR gate

C_i=0 means flip flop output is NOT connected to the feedback circuit and there is no exclusive or gate at this point

General Structure of ALFSR

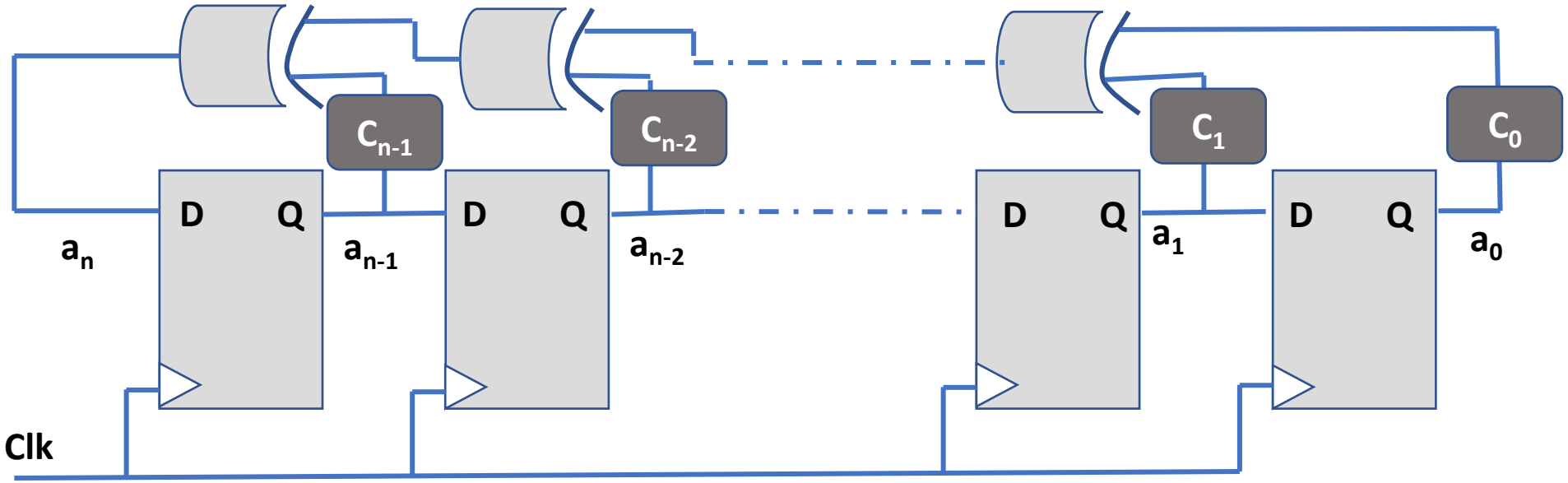

$$f(x)=a_n x^n + \ldots\ldots\ldots + a_3x^3 + a_2x^2 + a_1x^1 + a_0$$

Check ALFSR Sequence with given circuit or polynomial and seed value

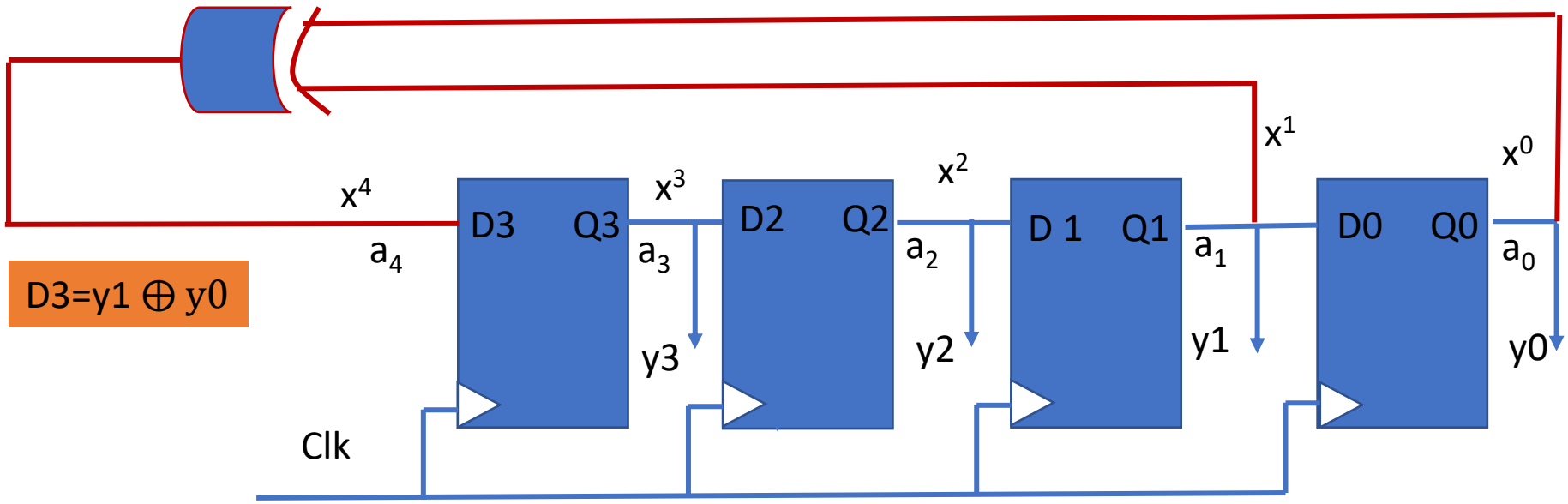

Polynomial
$P(x)=x^4+x+1$
Or $f(x)=a_4x^4 + a_3x^3 + a_2x^2 + a_1x^1 + a_0x^0$

Use seed value y3y2y1y0 = 1000 that is preset at start

Generated sequence from this ALFSR circuit

$D3=y1 \oplus y0$

Seed Value 1000

Clock	D3=(y1⊕y0)	y3	y2	y1	y0
1	0	1	0	0	0
2	0	0	1	0	0
3	1	0	0	1	0
4	1	1	0	0	1
5	0	1	1	0	0
6	1	0	1	1	0
7	0	1	0	1	1
8	1	0	1	0	1
9	1	1	0	1	0
10	1	1	1	0	1
11	1	1	1	1	0
12	0	1	1	1	1
13	0	0	1	1	1
14	0	0	0	1	1
15	1	0	0	0	1
16	REPEAT	1	0	0	0