1' - 5"

Tabloid Paper

11"

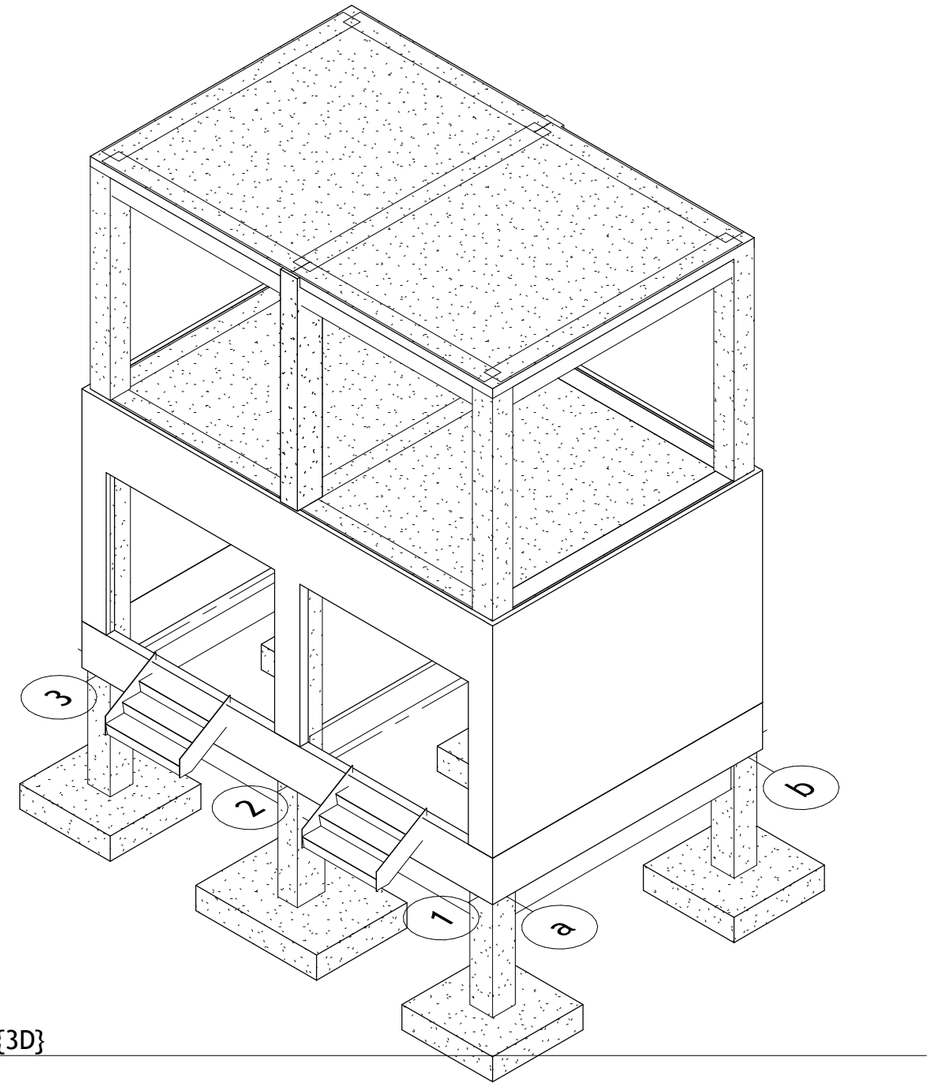

1 {3D}

Saki

S1 G+1 Com

1. 3D Architectural View
2. Generals
   - A. Fc' =2500 psi
   - B. Fy = 75200 psi
   - C. FF = 25 psi
   - D. LL floor = 52 psi
   - E. RW = 25 psi
   - F. FPW = 438 plf
   - G. LL roof = 20 psi
   - H. FF roof = 25 psi

Archi-3d

Project number	Project Number	A01
Date	Issue Date	
Drawn by	MD. Kabir	
Checked by	Daud H. Saki	Scale

2/13/2026 1:15:48 AM

1' - 5"

Tabloid Paper

11"

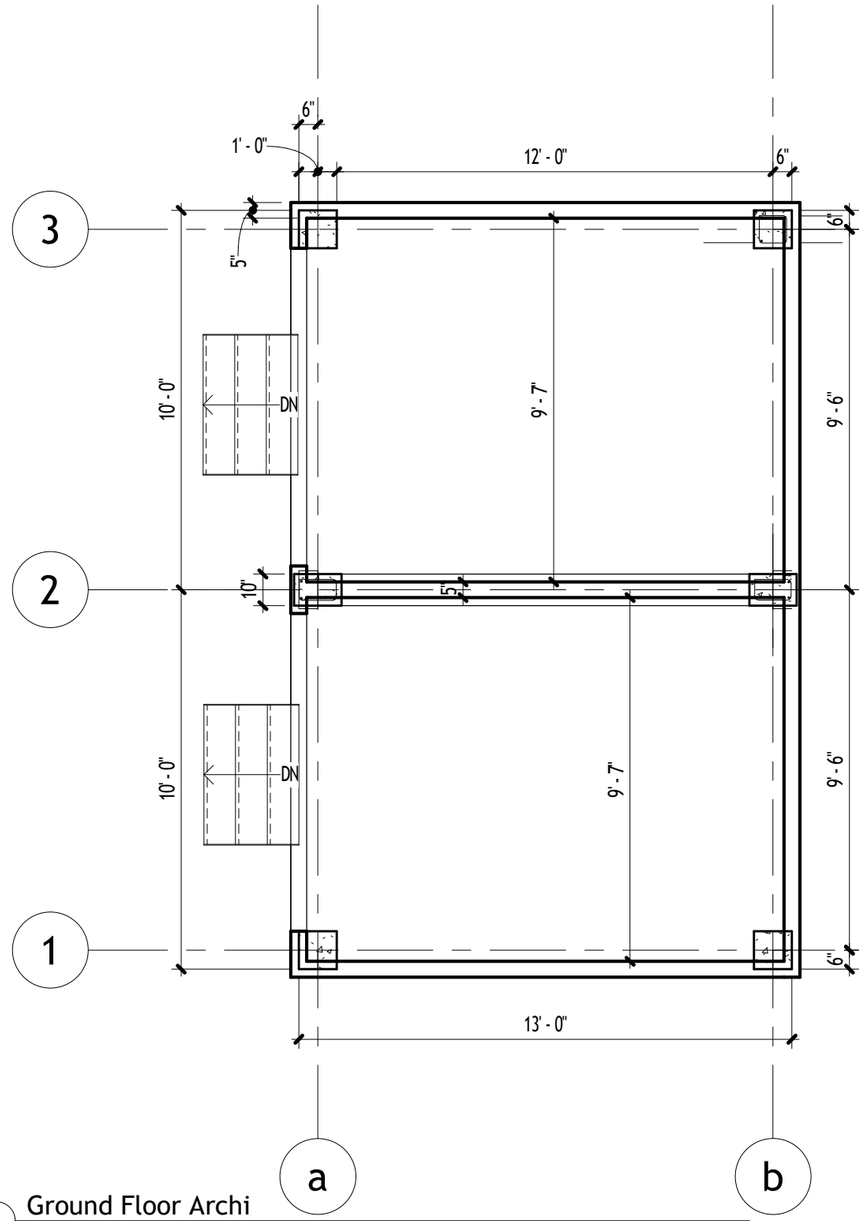

1 Ground Floor Archi
1/4" = 1'-0"

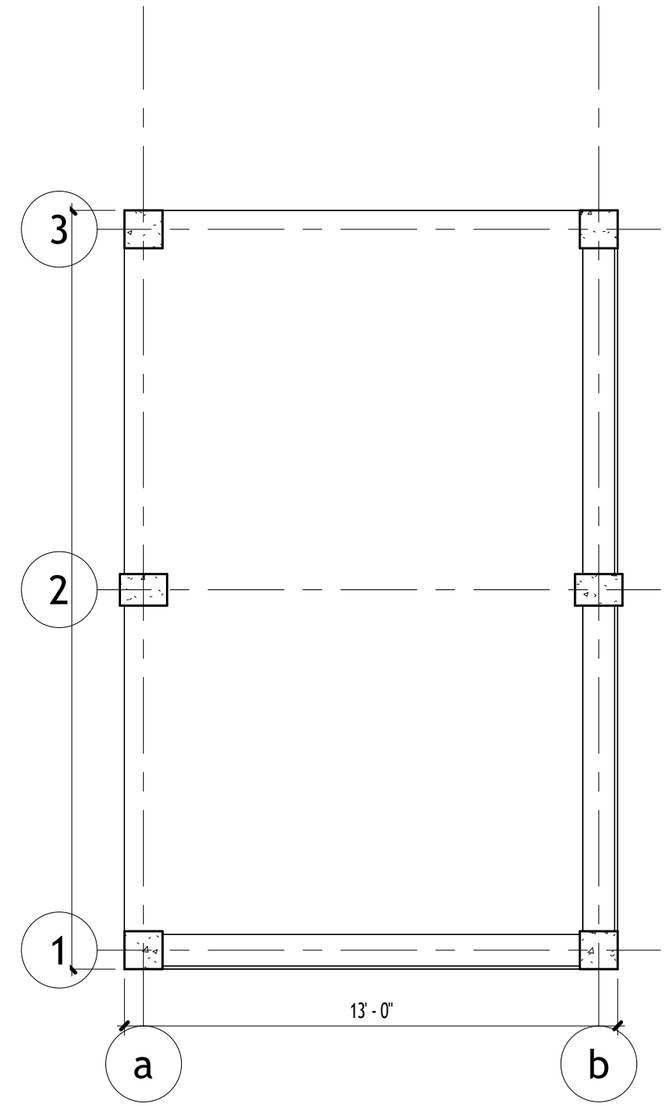

2 First Floor Archi
1/4" = 1'-0"

Saki

S1 G+1 Com

1. Ground Floor Architectural Drawing
2. First Floor ARchitectural Drawing

Plan Views

Project number	Project Number	A02
Date	Issue Date	
Drawn by	MD. Kabir	
Checked by	Daud H. Saki	Scale 1/4" = 1'-0"

2/13/2026 1:15:49 AM

1' - 5"

Tabloid Paper

Foundation Schedule			
Foundation	Qty.	Long dir Rebar	Short dir Rebar
4.5 x 4.5 x 13"	4	7-#4(12mm) rebar	7-#4(12mm) rebar
4.5' x 6' x 13"	2	9-#4(12mm) rebar	7-#4(12mm) rebar

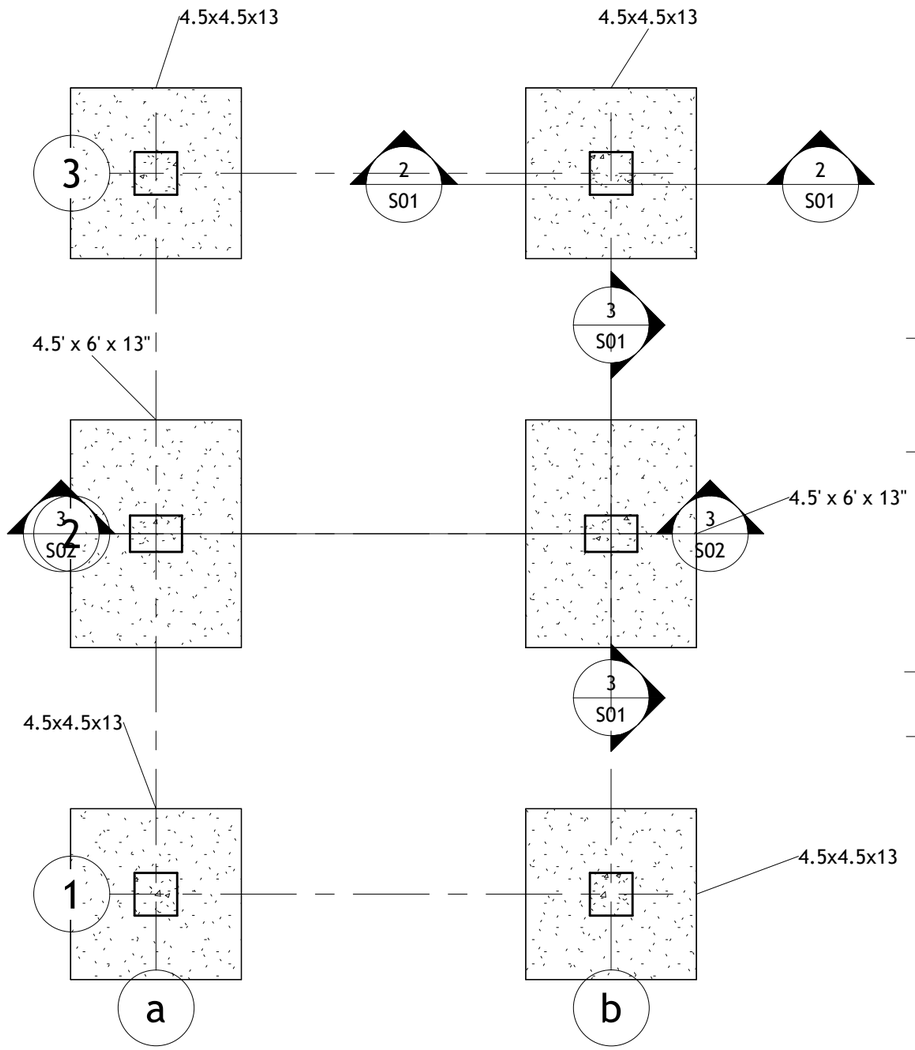

1 Foundation Plan view
1/4" = 1'-0"

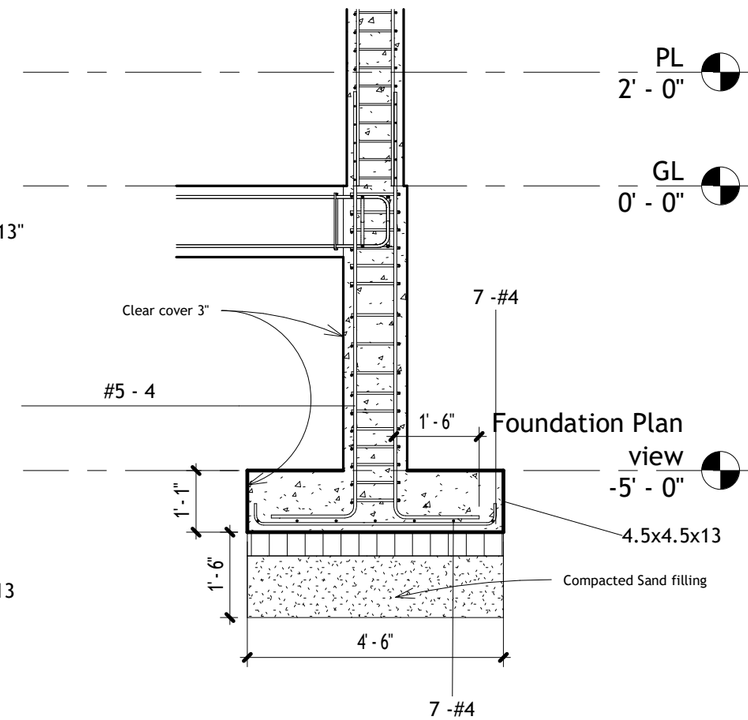

2 Footing Type 1 - Section 1
3/8" = 1'-0"

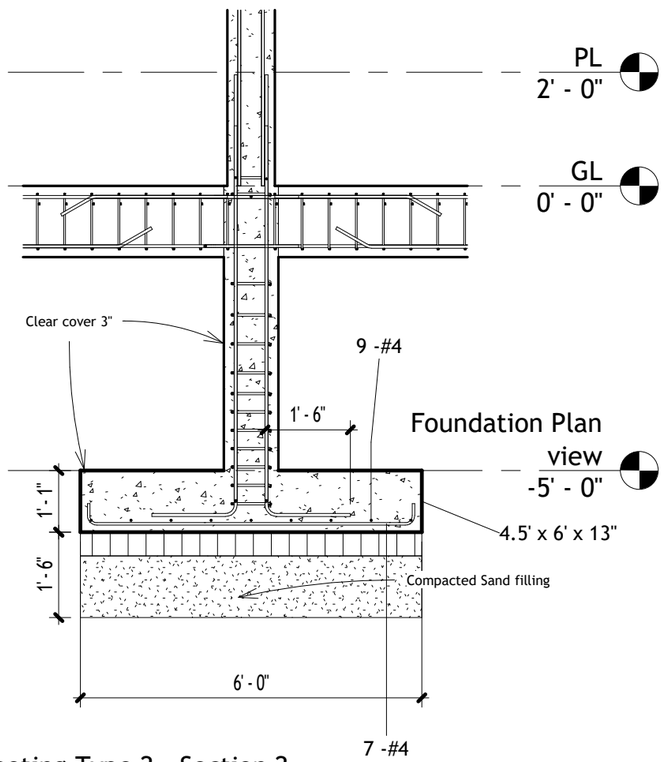

3 Footing Type 2 - Section 2
3/8" = 1'-0"

Saki

S1 G+1 Com

1. Foundation Plan View
2. One sided Section of Footing type 1 (4.5' x 4.5' x 13")
3. One sided Section of Footing type 2 (4.5' x 6' x 13")
4. Foundation Rebar Schedule
5. Generals
   - A. Soil Bearing Capacity considered 1.5ksf
   - B. For Type 1; DL = 17kip, LL = 3kip
   - C. For Type 2; DL = 26kip, LL = 7kip
   - D. Design Comb; 1.2DL + 1.6LL (minimum rebar governed)

Foundation

Project number	Project Number	S01
Date	Issue Date	
Drawn by	Author	
Checked by	Checker	Scale As indicated

2/13/2026 1:15:50 AM

1' - 5"

Tabloid Paper

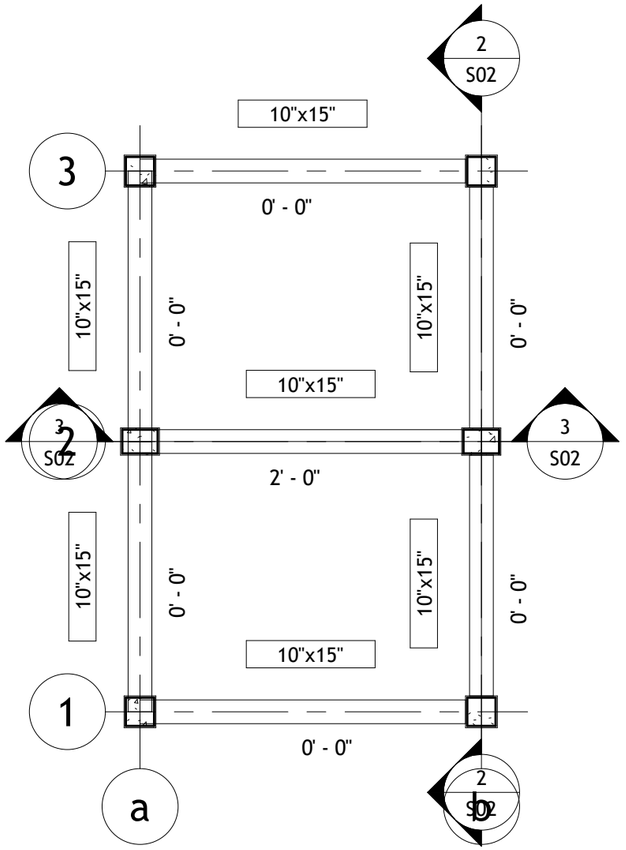

1 Grade beam Layout
3/16" = 1'-0"

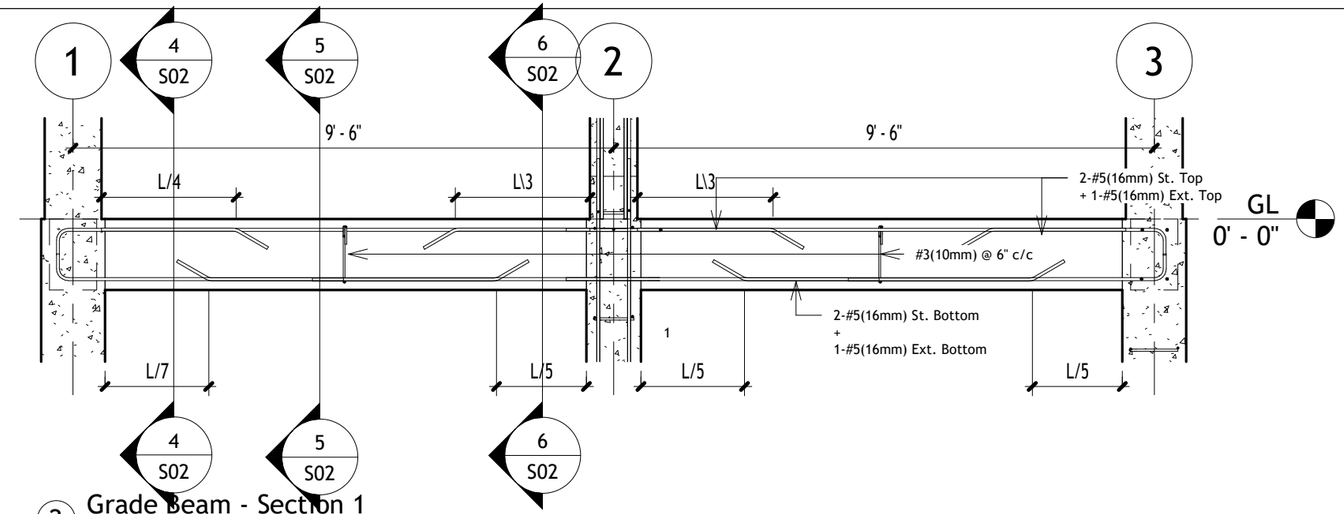

2 Grade Beam - Section 1
3/8" = 1'-0"

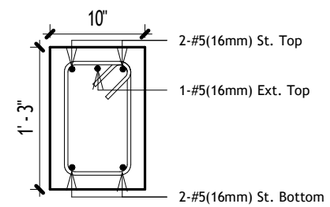

4 GB-11
3/4" = 1'-0"

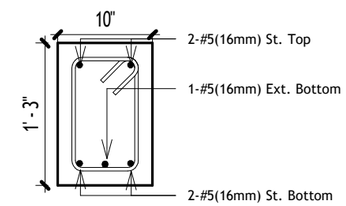

5 GB-22
3/4" = 1'-0"

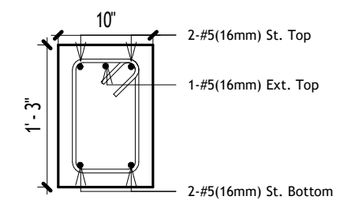

6 GB-33
3/4" = 1'-0"

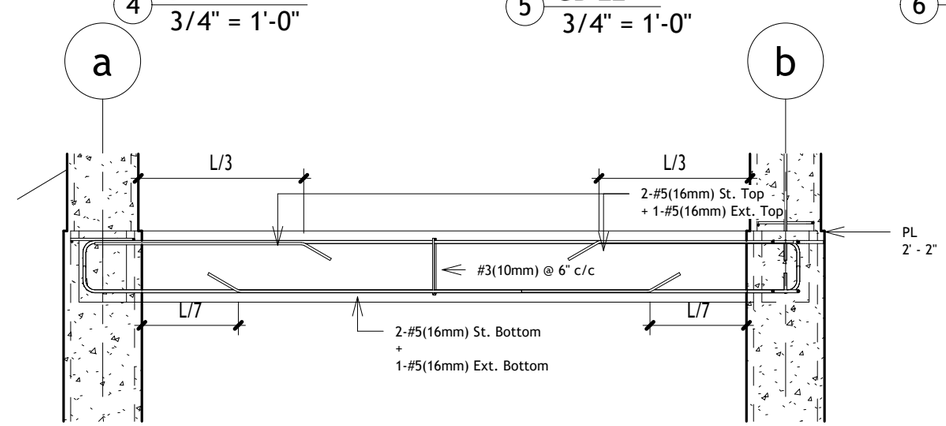

3 Grade Beam - Section 2
3/8" = 1'-0"

Saki

S1 G+1 Com

1. Grade Beam Layout with beam elevation mentioned at bottom of beams
2. Grade Beam Section 1
3. Grade Beam Section 2
4. From GB Section 1, Cross section of the beam GB11
5. From GB Section 1, Cross section of the beam GB22
6. From GB Section 1, Cross section of the beam GB33

Grade Beam Layout & Detailing

Project number	Project Number	S02
Date	Issue Date	
Drawn by	MD. Kabir	
Checked by	Daud H. Saki	Scale As indicated

11"

2/13/2026 1:15:51 AM

1' - 5"

Tabloid Paper

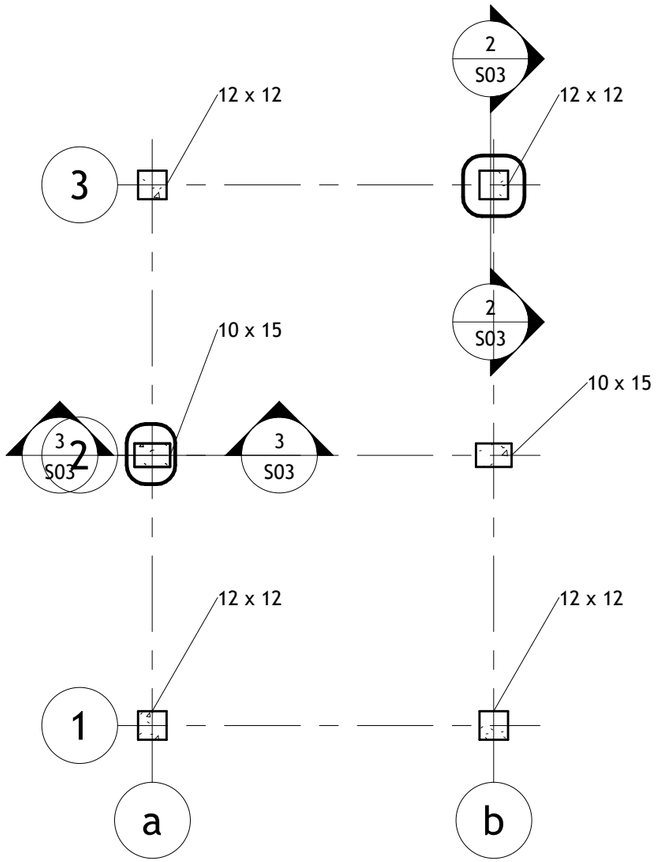

1 Column Layout
3/16" = 1'-0"

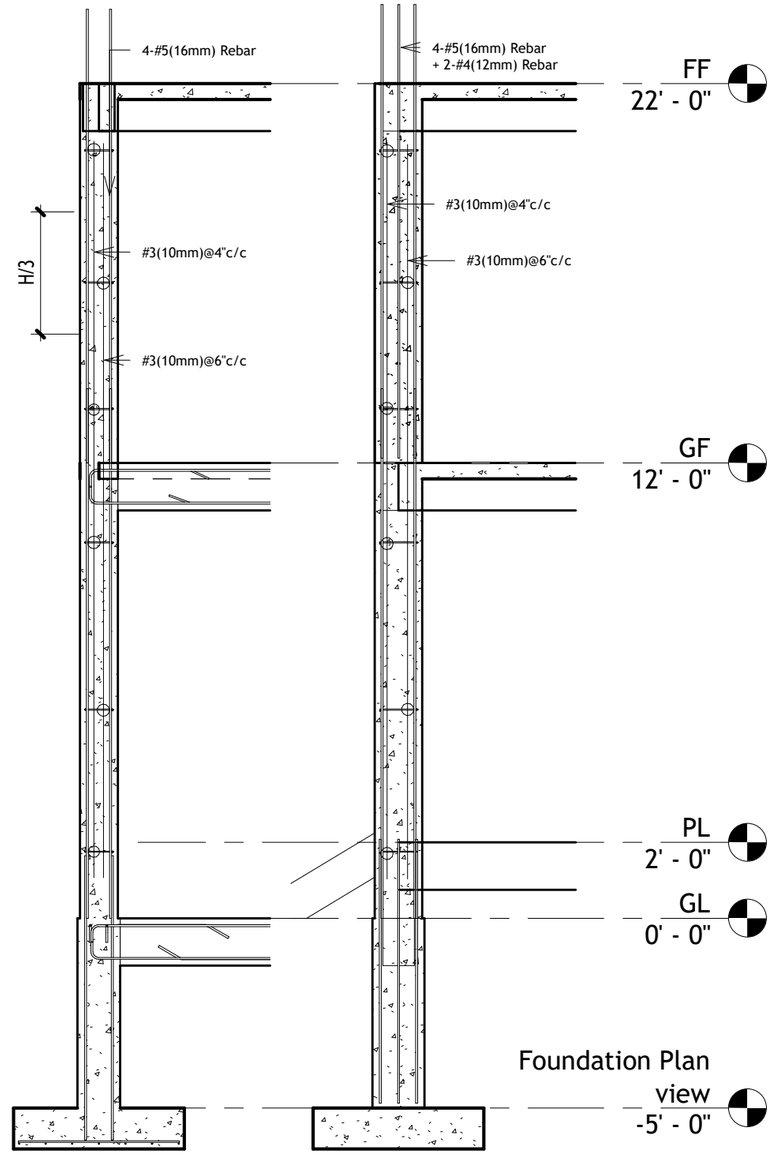

2 Column - Section 1
1/4" = 1'-0"

3 Column - Section 2
1/4" = 1'-0"

Column Schedule

Foundation	Qty.	Main bar	Tie		Section
12" x 12"	4	4-#5(16mm)	Top H/3	#3(10mm)@4"c/c	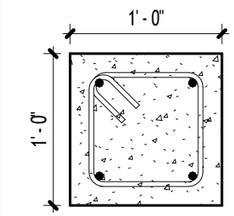 4 C12"x12" 1" = 1'-0"
			Mid H/3	#3(10mm)@6"c/c	
			Bot H/3	#3(10mm)@4"c/c	
10" x 15"	2	4-#5(16mm) + 2-#4(12mm)	Top H/3	#3(10mm)@4"c/c	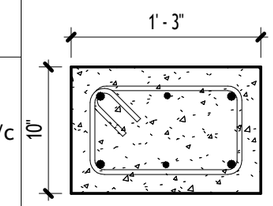 5 C10"x15" 1" = 1'-0"
			Mid H/3	#3(10mm)@6"c/c	
			Bot H/3	#3(10mm)@4"c/c	

11"

Saki

S1 G+1 Com

1. Column Layout
2. Column - section 1 of Type 1 (12" x 12")
3. Column - secton 2 of Type 2 (10" x 15")
4. Column Cross-section of Type 1 (12" x 12")
5. Column Cross-section of Type 2 (10" x 15")

Column Layout & Schedule

Project number	Project Number	S03
Date	Issue Date	
Drawn by	Author	
Checked by	Checker	Scale As indicated

2/13/2026 1:15:52 AM

1' - 5"

Tabloid Paper

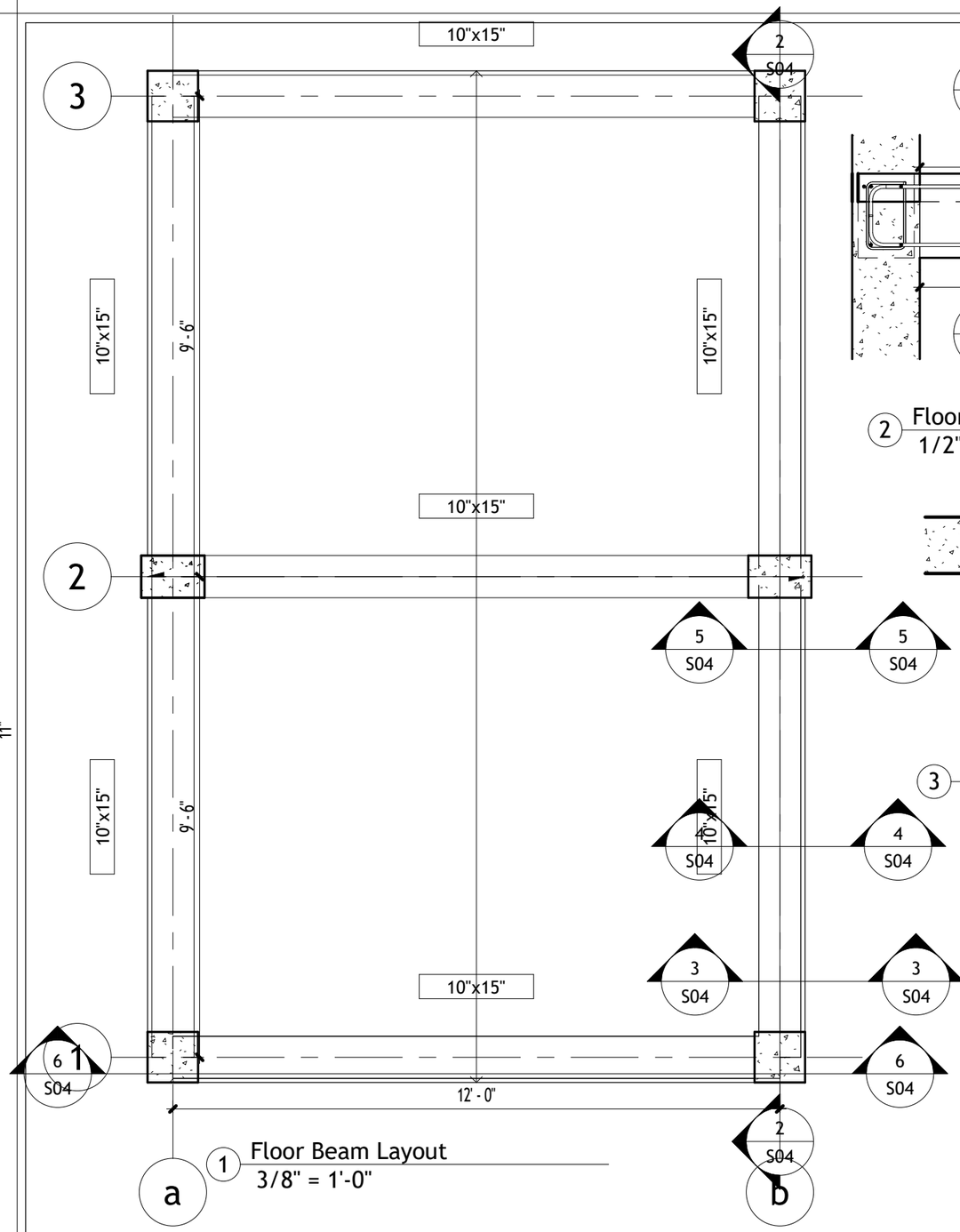

1 Floor Beam Layout
3/8" = 1'-0"

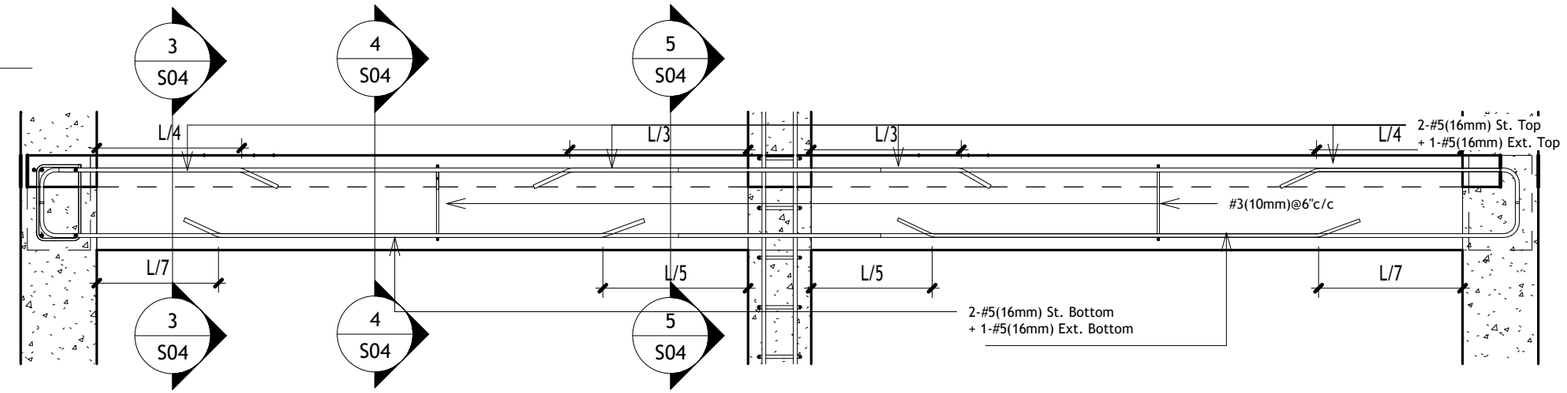

2 Floor Beam - Section 1
1/2" = 1'-0"

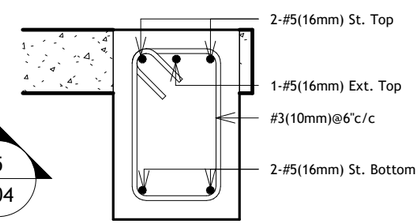

3 FB-11
1" = 1'-0"

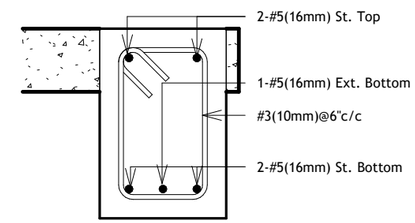

4 FB-22
1" = 1'-0"

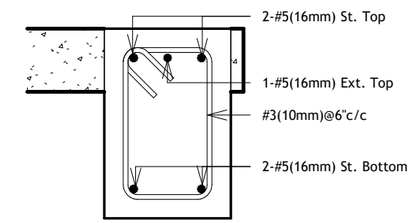

5 FB-33
1" = 1'-0"

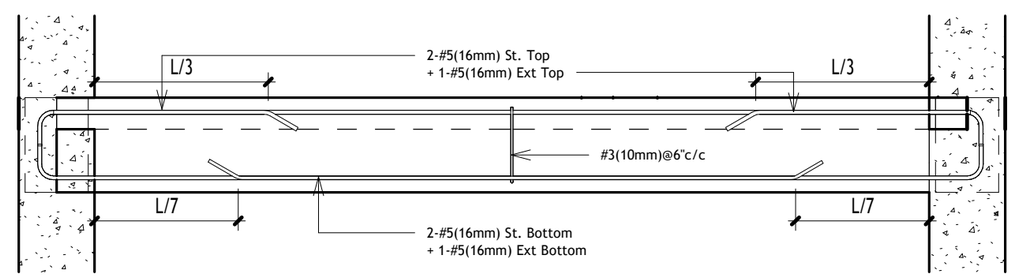

6 Floor Beam - Section 2
1/2" = 1'-0"

Saki

S1 G+1 Com

1. Typical Floor Beam Layout
2. Floor Beam - Section 1
3. From Floor Beam - Section 1, Rebar Cross-section FB11
4. From Floor Beam - Section 1, Rebar Cross-section FB22
5. From Floor Beam - Section 1, Rebar Cross-section FB33
6. Floor Beam - Section 2

Floor Beam Layout & Detailing

Project number	Project Number	S04
Date	Issue Date	
Drawn by	Author	
Checked by	Daud H. Saki	Scale As indicated

11"

2/13/2026 1:15:52 AM

1' - 5"

Tabloid Paper

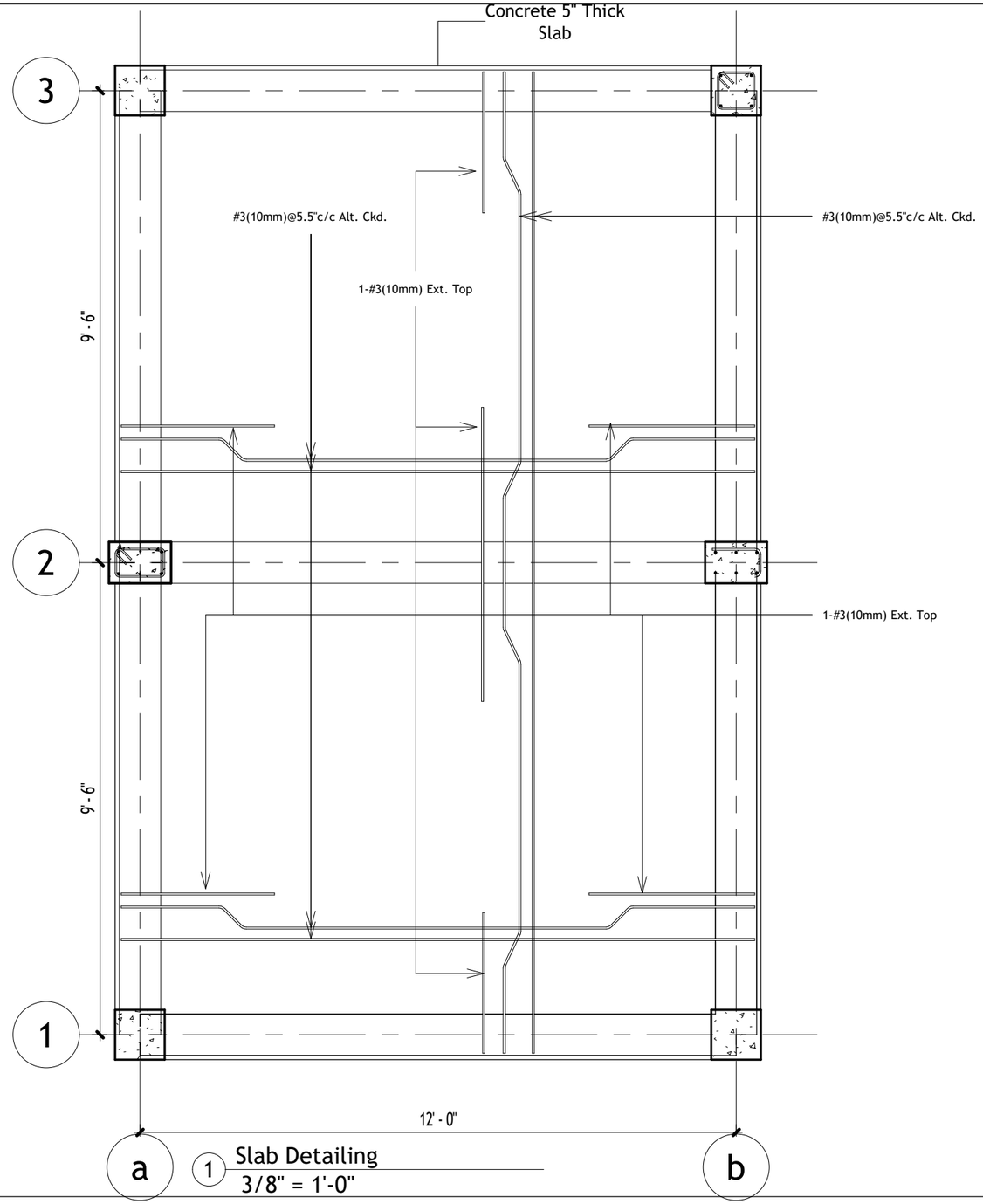

1 Slab Detailing
3/8" = 1'-0"

11"

Saki

S1 G+1 Com

1. Slab Detailing
2. General
   - A. Slab thickness 5"
   - B. Short dir rebar; 10mm rebar @ 5.5"c/c alt. ckd
   - C. Long dir rebar; 10mm rebar @ 6"c/c
   - D. Both dir; 1-10mm ext top

Slab Detailing

Project number	Project Number	S05
Date	Issue Date	
Drawn by	Author	
Checked by	Checker	Scale 3/8" = 1'-0"

2/13/2026 1:15:53 AM