Contents

1 INTRODUCTION 3
1.1 General 3
1.2 Project Information 3
2 STRUCTURAL DESIGN CRITERIA 4
2.1 Codes, Standards and References 4
2.2 Structural Geometry Considerations 4
2.3 Material Specifications 4
2.3.1 Concrete 4
2.3.2 Rebar 4
2.4 Loading Criteria (detailed calculations) 4
2.4.1 Gravity Loads 5
2.4.2 Lateral Loads 5
2.5 Boundary Conditions (Support Conditions) 6
2.6 Design Method and Load Combinations 6
2.6.1 Unfactored load combinations 6
2.6.2 Factored Load Combinations 6
2.7 Bearing Capacity of Shallow Foundation/Pile capacity 6
2.8 3D view and Typical Plan of Building 7
2.9 Selection of Analysis type 9
3 ANALYSIS AND SOFTWARE DESIGN FEATURES 9
4 SERVICEABILITY CRITERIA AND BUILDING IRREGULARITIES 9
4.1 Serviceability Criteria 9
4.1.1 Vertical Deflection Limits (D+L and L) 9
4.1.2 Maximum Lateral displacement for Wind Load 9
4.1.3 Story drift for Wind Load 9
4.1.4 Maximum Lateral displacement for Earthquake Load 10
4.1.5 Story Drift for Earthquake Load 10
4.2 Irregularities 12
4.2.1 Plan Irregularities 12
4.2.2 Vertical Irregularities 13
4.3 Summary Table 14
5 ADEQUACY OF STRUCTURAL MEMBERS 15
5.1 Adequacy of Column 15
5.2 Adequacy of Beam 17
5.3 Adequacy of Shear Wall 20

5.4 Adequacy of Slab 21
5.5 Adequacy of Foundation 23
6 CONCLUSIONS AND RECOMMENDATIONS 25
6.1 Recommendations: 25

Table of Figures

Figure 2.1: 3D view of the building 7
Figure 2.2: Parking Floor Plan 8
Figure 2.3: 1st Floor Plan 8
Figure 2.4: 2F to Roof Plan 9
Figure 4.1: Vertical displacements (D+L) 10
Figure 4.2: Vertical displacements (L) 11
Figure 4.3: Maximum Lateral Displacement for Wind Load 11
Figure 4.4: Maximum Story Drift for Wind 11
Figure 4.5: Maximum Lateral displacement for Earthquake load 11
Figure 4.6: Story drift for Earthquake Load 11
Figure 5.1: Column Longitudinal Reinforcements 15
Figure 5.2: Cross section of Column 16
Figure 5.3: Long Section of Column 16
Figure 5.4: Longitudinal Reinforcement of Beam 17
Figure 5.5: Longitudinal Section of Beam 18
Figure 5.6 Section A-A and C-C of Beam 19
Figure 5.7: Section B-B of Beam 19
Figure 5.8: Longitudinal Reinforcement of Shear Wall 20
Figure 5.9: Cross Section of Shear Wall 21
Figure 5.10: Slab reinforcement requirement 21
Figure 5.11: Slab Reinforcement Requirement after providing #4@ 10" c/c in both directions 22
Figure 5.12 Slab reinforcement detailing for typical floor 22
Figure 5.13: Column load 23
Figure 5.14: Detailing of Footing (Square footing) 24

1 INTRODUCTION

1.1 General

This project involves the construction of a 6-story residential building in Sirajganj, Bangladesh. The building will utilize a reinforced concrete (RC) frame structure with beam-supported floor slabs.

Site and Foundation:

- Based on a soil test report, a shallow foundation has been designed.

Documents Provided:

- Architectural Design Drawings (AutoCAD soft copy)
- Sub-soil Investigation Report (PDF soft copy)
- Project Information Sheet (doc. file)

Additional Requirements:

- ETABS File (soft copy of .edb file) - structural analysis software
  - With service load
  - With factored loading
- Project Report (hard copy of doc file) - detailed project information
- Sample Drawing (hard copy of 2d sketch) - for illustration purposes

1.2 Project Information

Project Information Sheet

SL NO	Item Name	Item Description	
1	Client Information	Name:	------
		Address:	-----
		Profession:	
		Contact No:	
		E-mail:	
2	Project Location	Plot Area	3250 sft
		Plot Number	---
		Thana/Upazila:	
		District:	Sirajganj
		Division:	Rajshahi
		Google Earth Location	
3	Site Information	Adjacent (Utility Service Lines, Buildings, Walls of other property etc)	**North (Front) side**: Open ground, **East side**: 6-storied animation building (under construction). **South side:** Boundary wall, **West side:** Open ground area
		Adjacent Road	
		Road level (±0)	0.0 Level
		Earth Ground Level (EGL)	(-) 1'-0"
		Plinth Level	(+) 2 '-6"
SL No	**Item Name**	**Item Description**	
4	Building Information	Occupancy Type:	Residential
		No. of Story:	6
		Story Height, Building Height Restriction (RAJUK or any other Authorities)	10'
		No. of Unit Per Floor, Mezzanine Floor	Two units, No mazzanine floor
		Structure Type	Office Building
		Structural System	------
		Building Foot Print Area	3256 sft
		Floor Area	19,402 sft
		No. of Basements	N/A
		Parking Facilities	8 nos.

		Ground Floor Facilities	Car parking
		Roof Facilities	Over head water tank
		Lift Requirement & Measurement	8 persons lift,Size: 5'-6"X6'-2"
		UGWT Requirement & Location	From Grid 2-2 to Grid 3-3 southside area, Size: 13'-1"X24'-10"
		Septic Tank Requirement & Location	N/A
		OHWT Requirement & Location	Top of stair & lift core area, Size: 17'-6"X24'-1"
		Ramp Requirement & Location	(±) 0.00 level to (+) 2'-6"
		Type of Coarse Aggregate (Brick/Stone)	Brick chips

2 STRUCTURAL DESIGN CRITERIA

2.1 Codes, Standards and References

Structural analysis and design of this building have been reviewed according to Bangladesh National Building Code (BNBC) 2020.
ACI318-08 ACI 318M-08: Building code requirement for Reinforced concrete,2008.
ASCE 7-05 ASCE/SEI 7-05: 05: Minimum Design Loads for Buildings and Other Structures

- Structural Analysis has been considered according to BNBC 2020.
- Loading Criteria are considered according to BNBC 2020.
- Material Specifications and properties have been considered according to BNBC 2020.
- Structural Design of RCC has been considered according to BNBC2020.

2.2 Structural Geometry Considerations

Structural geometry (Shape, size, story height, and number of stories) have been considered as per the architectural design and further requirements have also checked.

2.3 Material Specifications

2.3.1 Concrete

The following concrete grades f'c (28 days cylinder strength) are adopted in the design

- Directional Type: Isotropic
- Weight per unit volume $0.15\frac{kip}{ft^3}$
- Modulus of Elasticity (brick chip) = $45000\sqrt{(f_c')} = 2623928.353\ psi = 377845.6828\ kip/ft^2$
- Poison's ration 0.2
- Concrete compressive strength, $fc' = 3400\ psi = 489.6\ kip/ft^2$

2.3.2 Rebar

The Following steel grades f_y are adopted in design:
Material type: Rebar

- Weight per unit volume: $0.49\ kip/ft^3$
- Modulus of Elasticity $4176000\ kip/ft^2$
- Minimum Yield Strength, f_y: $9024.48\ kip/ft^2$
- Minimum Tensile Strength, f_u: $11280.6\ kip/ft^2$
- Expected Yield Strength, f_{ye}: $9926.93\frac{kip}{ft^2}$
- Expected Tensile Strength, f_{ue}: $12408.66\ kip/ft^2$

2.4 Loading Criteria (detailed calculations)

The building has been analyzed for possible load actions such as Gravity and Lateral Loads.

2.4.1 Gravity Loads

Gravity loads, such as dead and live loads applied at the floors or roofs of the building according to the provision of BNBC 2020 are as follows

2.4.1.1 Dead loads

Self-Weight of Concrete = $150\ pcf$
Floor finish (FF) on floors = $25\ psf$; Stairs = $56\ psf$; Roof = $40\ psf$
Fixed Partition wall (RPW) = 10" $beam\ *\ 8.75'\ Height\ *\ 120\ pcf\ brick\ with\ morter\ =\ 875\ plf;\ 5"\ beam\ 437.5\ plf;\ parapet\ wall\ =\ 200\ plf$

2.4.1.2 Live loads

Floor Live Load (LL42) = $42\ psf$
Staircase Live Load (LL100) = $100\ psf$
Roof Live Load (LL63) = $63\ psf$
Parking Live Load (LL75) = $75\ psf$
Random Partition Wall (RPW) = $25\ psf$
OHWT $5' = 312\ psf$; Edge = $500\ plf$
Lift load = $\frac{4*8*75}{5.5*6.167} * 2.205 = 156.02 \approx 170\ psf$

2.4.2 Lateral Loads

Lateral Loads, such as Wind Load and Seismic Load applied at the building in accordance with the provision of Chapter 2, Part 6 of BNBC 2020 is as follows:

2.4.2.1 Wind Load consideration parameters:

Basic Wind Speed = $114\ mph$
Structural Importance Factor $I = 1$
Exposure Category = A
Topographic Factor, $k_zt = 1$
Gust Effect Factor, $G = 0.85$
Wind Directionality Factor, $k_d = 0.85$
Damping Ratio = 5%
Wind Pressure Coefficients,

$C_{pe} = 0.8$
$C_{pl} = -0.28\ (x\ dir)$
$C_{pl} = -0.5\ (y\ dir)$

2.4.2.2 Earthquake Load consideration parameters

Soil Site Class = SD
Seismic Zone Coefficient, $Z = 0.28$
Zone = 3
Importance factor, I = 1
Seismic Design Category, SDC = D
Dual System Intermediate Moment Resisting Concrete Frame with Shear Wall
Response Reduction Factor, $R = 6.5$
System Overstrength Factor, $\Omega = 2.5$
Deflection Amplification Factor, $C_d = 5$
Spectral Response Acceleration Parameters,

$S_s = 0.7$
$S_1 = 0.28$

Site Coefficients,

$F_a = 1.35$
$F_v = 2.7$

Building Period, $T = 0.78\ sec$
Long Period Transition Period, $TL = TD = 2$

2.5 Boundary Conditions (Support Conditions)

Column base supports have been considered as fixed supports in 3D model of super structure Spring supports have been considered for shallow foundation.

2.6 Design Method and Load Combinations

2.6.1 Unfactored load combinations

- D: (SW + FF + FPW)
- L: (LL42 + LL63 + RPW + LL100 + LL75 + OHWT + Lift)
- Seismic Weight: (SW + FF + FPW) + 0.25(LL42 + LL63 + RPW) + 0.5(LL100 + LL75 + OHWT + Lift)
- D + 0.5L + 0.7W

2.6.2 Factored Load Combinations

- As per BNBC 2020 (75 combos or 99 combos)

2.7 Bearing Capacity of Shallow Foundation/Pile capacity

- Bearing capacity of soil considered for this building is 4 ksf.

2.8 3D view and Typical Plan of Building

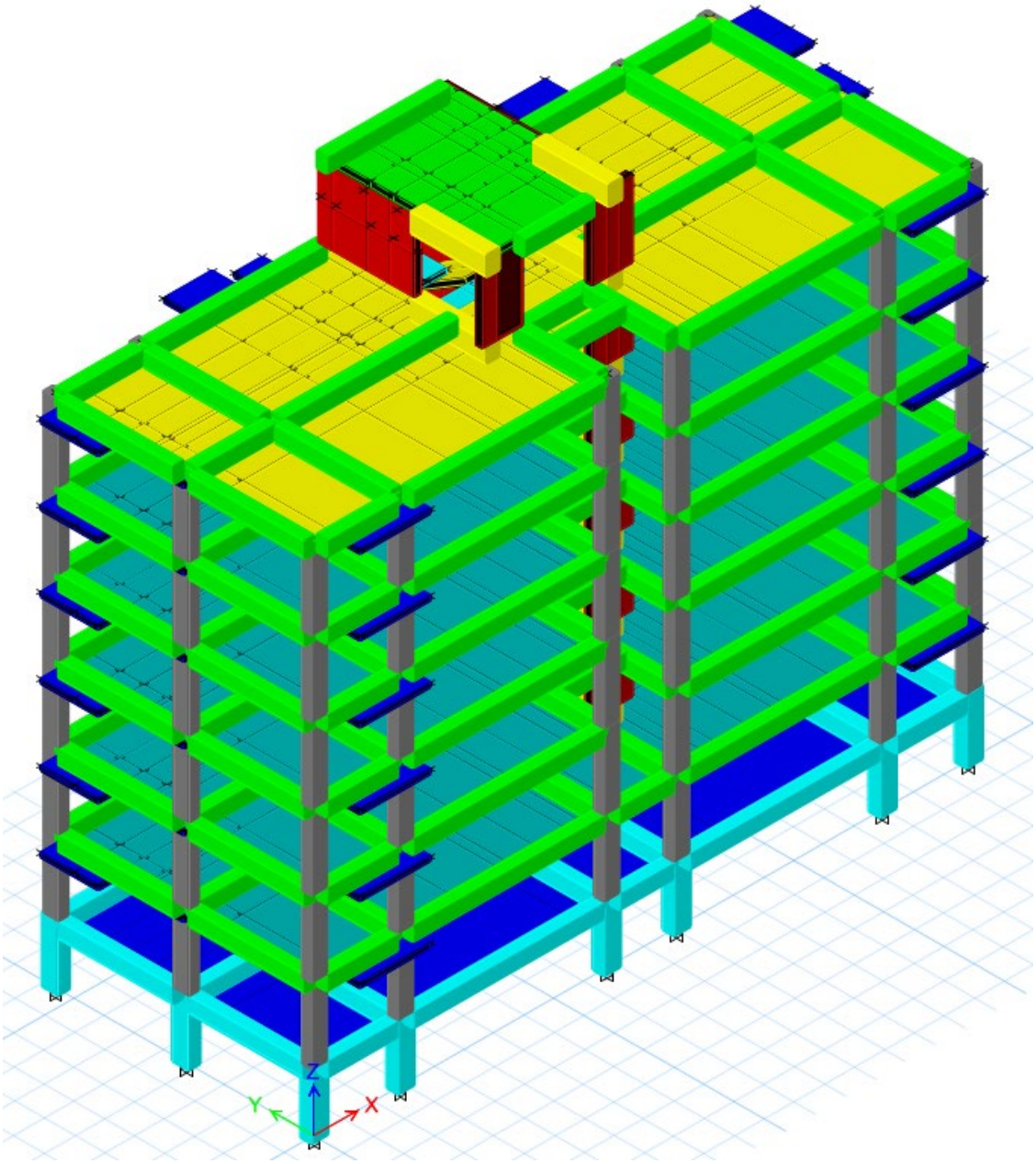

Figure 2.1: 3D view of the building

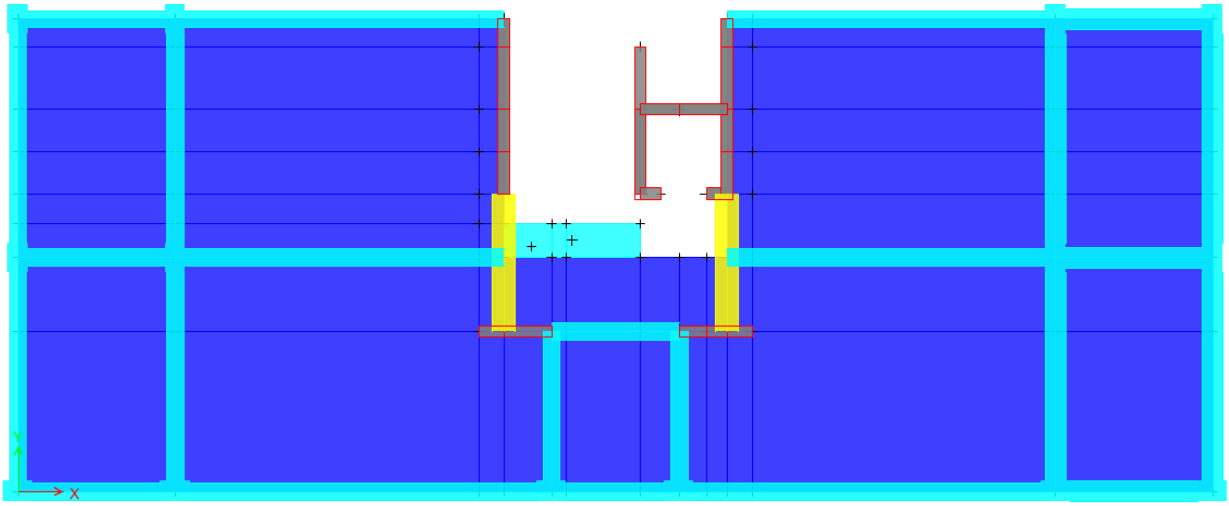

Figure 2.2: Parking Floor Plan

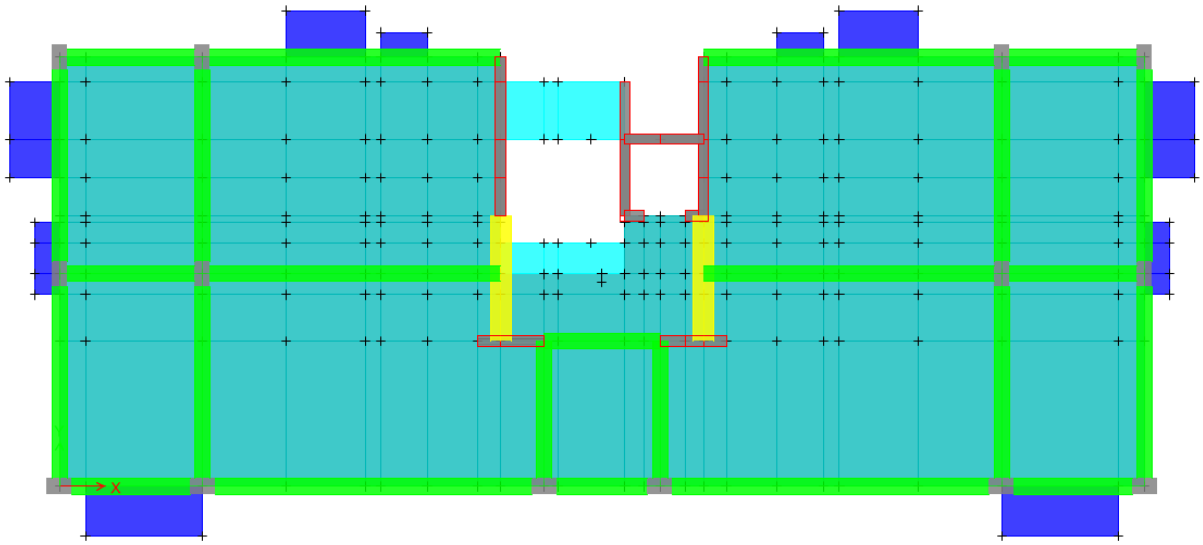

Figure 2.3: 1st Floor Plan

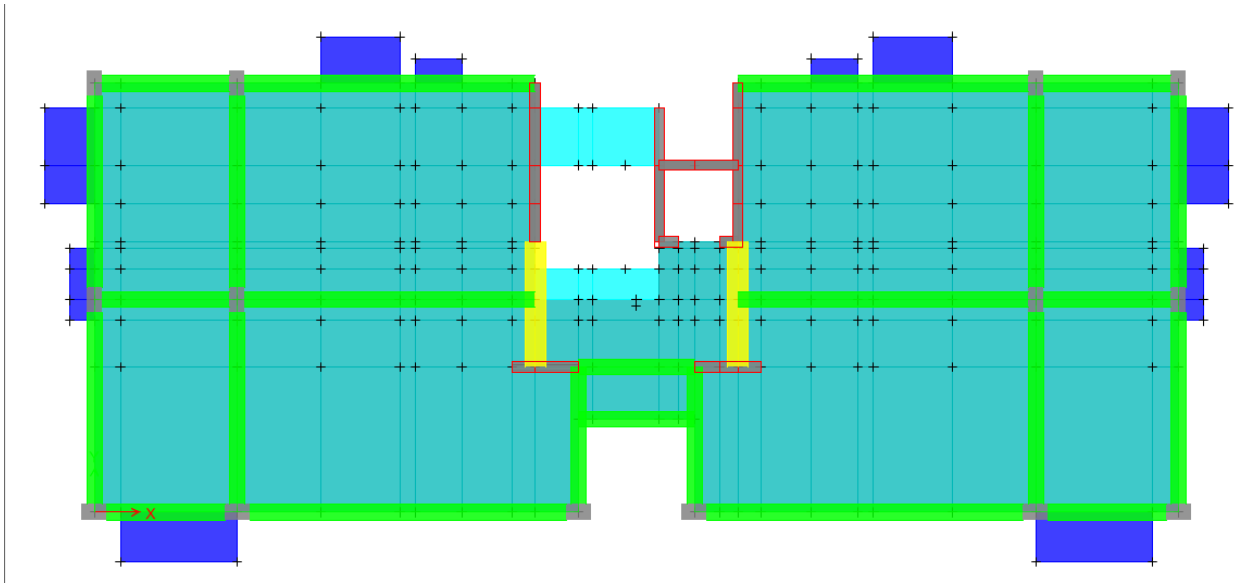

Figure 2.4: 2F to Roof Plan

2.9 Selection of Analysis type

Structural analysis has been performed by Finite Element Analysis.

3 ANALYSIS AND SOFTWARE DESIGN FEATURES

- MS Excel: Spread sheets
- ETABS 16: Extended 3D Analysis of Building System

4 SERVICEABILITY CRITERIA AND BUILDING IRREGULARITIES

4.1 Serviceability Criteria

4.1.1 Vertical Deflection Limits (D+L and L)

- Table 6.1.2: Deflection Limits
  - D+L: L/240 = 24*12/240 = 1 inch
  - L: L/360 = 24*12/360 = 0.8 inch
- From ETABS,
  - 0.727in (D+L) [Figure 4.1] (ok)
  - 0.234in (L) [Figure 4.2] (ok)

4.1.2 Maximum Lateral displacement for Wind Load

- The overall sway (horizontal deflection) at the top level shall not exceed (1/500)*H
  - D+0.5L+0.7W: H/500 = (70*12/500) = 1.68 inch
- From ETABS,
  - 0.425 inch due to wx4 loading [Figure 4.3](Ok)

4.1.3 Story drift for Wind Load

- Section 1.5.6.1 of BNBC 2020
  - Tn = 0.73 including OHWT height
  - Drift less than equal 0.004 for Tn> 0.
- From ETABS,
  - 0.0006 < 0.004 due to wx4 loading [Figure 4.4] (ok)

4.1.4 Maximum Lateral displacement for Earthquake Load

- From Table 6.2.21
  - $\delta_x = C_d * \frac{\delta_{xe}}{I}$
  - $C_d = 2.5$
  - Allowable Story Drift Limit (Δ) : 0.02H = 0.02 * 78.5 * 12 = 18.84 inch
- From ETABS,
  - 1.8 * 2.5 = 4.5 inch due to ey2 loading [Figure 4.5] (Ok)

4.1.5 Story Drift for Earthquake Load

- From Table 6.2.21
  - $\delta_x = C_d * \frac{\delta_{xe}}{I}$
  - $C_d = 2.5$
  - Allowable Story Drift Limit: 0.02 = 0.02
- From ETABS,
  - 0.0028* 2.5 = 0.007 inch due to ey3 loading [Figure 4.6] (Ok)

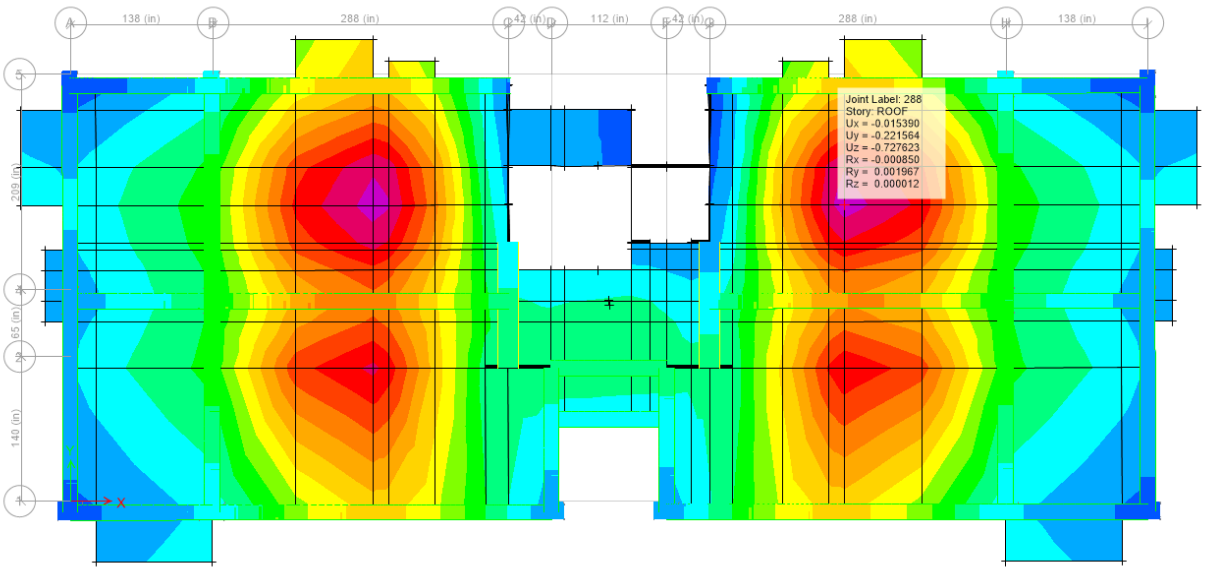

Figure 4.1: Vertical displacements (D+L)

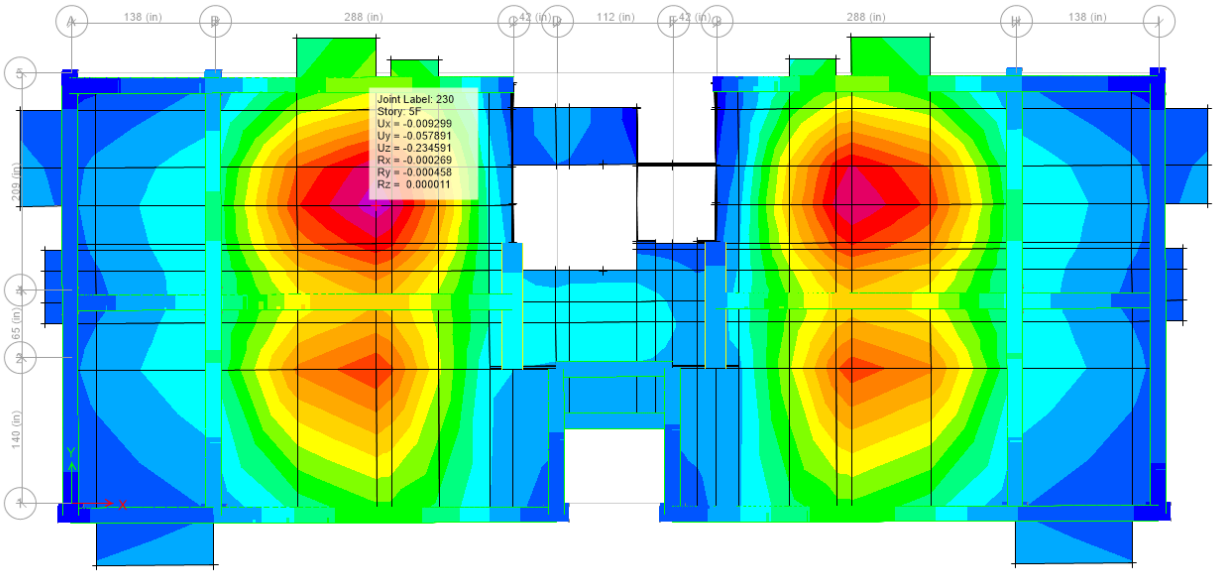

Figure 4.2: Vertical displacements (L)

Displacement, in

Max: (0.425599, ROOF); Min: (0, Base)

Figure 4.3: Maximum Lateral Displacement for Wind Load

Drift, Unitless

Max: (0.000622, 3F); Min: (0, Base)

Figure 4.4: Maximum Story Drift for Wind

Displacement, in

Max: (1.854307, OHWT); Min: (0, Base)

Figure 4.5: Maximum Lateral displacement for Earthquake load

Drift, Unitless

Max: (0.002872, 5F); Min: (0, Base)

Figure 4.6: Story drift for Earthquake Load

4.2 Irregularities

4.2.1 Plan Irregularities

4.2.1.1 Torsional Irregularities

Story	Load Case/Combo	Direction	Maximum in	Average in	Ratio	Status
OHWT	ex1	X	1.639932	1.639133	1	Ok
ROOF	ex1	X	1.471134	1.443967	1.019	Ok
4F	ex1	X	1.062319	1.01511	1.047	Ok
3F	ex1	X	0.810166	0.764124	1.06	Ok
2F	ex1	X	0.543065	0.505835	1.074	Ok
1F	ex1	X	0.285614	0.263527	1.084	Ok
GF	ex1	X	0.076615	0.076615	1	Ok
OHWT	ex2	X	1.650166	1.633962	1.01	Ok
ROOF	ex2	X	1.461037	1.439645	1.015	Ok
4F	ex2	X	1.018662	1.010027	1.009	Ok
3F	ex2	X	0.774519	0.759458	1.02	Ok
2F	ex2	X	0.517861	0.502244	1.031	Ok
1F	ex2	X	0.271966	0.261484	1.04	Ok
GF	ex2	X	0.076659	0.076659	1	Ok
OHWT	ex3	X	1.658909	1.644303	1.009	Ok
ROOF	ex3	X	1.524015	1.44829	1.052	Ok
4F	ex3	X	1.105976	1.020193	1.084	Ok
3F	ex3	X	0.845813	0.76879	1.1	Ok
2F	ex3	X	0.56827	0.509426	1.116	Ok
1F	ex3	X	0.299262	0.26557	1.127	Ok
GF	ex3	X	0.076572	0.076572	1	Ok
OHWT	ey1	Y	1.770168	1.766487	1.002	Ok
ROOF	ey1	Y	1.534578	1.511054	1.016	Ok
4F	ey1	Y	1.005211	0.977367	1.028	Ok
3F	ey1	Y	0.719548	0.693068	1.038	Ok
2F	ey1	Y	0.442131	0.419771	1.053	Ok
1F	ey1	Y	0.203659	0.188419	1.081	Ok
GF	ey1	Y	0.044831	0.044534	1.007	Ok
OHWT	ey2	Y	1.817164	1.76475	1.03	Ok
ROOF	ey2	Y	1.762311	1.509169	1.168	Ok
4F	ey2	Y	1.1674	0.975335	1.197	Ok
3F	ey2	Y	0.841344	0.691171	1.217	Not Ok
2F	ey2	Y	0.519117	0.418221	1.241	Not Ok
1F	ey2	Y	0.238378	0.187434	1.272	Not Ok
GF	ey2	Y	0.042507	0.041796	1.017	Ok
OHWT	ey3	Y	1.685291	1.625108	1.037	Ok
ROOF	ey3	Y	1.707173	1.401247	1.218	Not Ok
4F	ey3	Y	1.173454	0.920467	1.275	Not Ok
3F	ey3	Y	0.864556	0.657226	1.315	Not Ok
2F	ey3	Y	0.549077	0.400628	1.371	Not Ok
1F	ey3	Y	0.263854	0.181024	1.458	Not Ok
GF	ey3	Y	0.046928	0.045607	1.029	Ok

4.2.1.2 Re-entering Corners

- Building is irregular in terms of re-entrant corners if A/L
- No re-entering corners available for the building

4.2.1.3 Diaphragm Discontinuity

- Diaphragm discontinuity exists if opening area > ½ Total Floor Area
- There is no opening except stairs and a lift in the plan of the building.
- In terms of diaphragm discontinuity, the building is regular

4.2.1.4 Out-of-Plane Offsets

- There is no out-of-plane offset irregularity in the building

4.2.1.5 Vertical Irregularities

- All the shear walls are parallel but not symmetric with centroidal orthogonal directions.

4.2.2 Vertical Irregularities

4.2.2.1 Stiffness Irregularity-Soft Story

Story	Load Case	Stiffness X	Stiffness Y	Ke/Ka	Status	Ke/Kavg	Status
		kip/ft	kip/ft				
OHWT	ex1	1856.286	0	-		-	
ROOF	ex1	9372.541	0	5.049082	Ok	-	
5F	ex1	14412.12	0	1.537696	Ok	-	
4F	ex1	18497.77	0	1.283487	Ok	2.164246	Ok
3F	ex1	21975.44	0	1.188005	Ok	1.55919	Ok
2F	ex1	27468.85	0	1.249979	Ok	1.501431	Ok
1F	ex1	36960.5	0	1.345542	Ok	1.632001	Ok
GF	ex1	98987.27	0	2.678191	Ok	3.436867	Ok
OHWT	ey1	0	1538.275	-		-	
ROOF	ey1	0	7837.794	5.095184	Ok	-	
5F	ey1	0	11856.72	1.512763	Ok	-	
4F	ey1	0	16444.38	1.386925	Ok	2.323441	Ok
3F	ey1	0	21022.65	1.27841	Ok	1.745155	Ok
2F	ey1	0	29074.21	1.382994	Ok	1.768369	Ok
1F	ey1	0	47509.68	1.634083	Ok	2.141965	Ok
GF	ey1	0	147040.1	3.094951	Ok	4.519374	Ok

4.2.2.2 Mass Irregularity

- Mass irregularity exists if mass of a story greater than 200% mass of adjacent stories
- As per occupancy (Residential building), there is no mass irregularity

4.2.2.3 Vertical Geometric Irregularity

- Irregularity exists if the dimension of the lateral force resisting system at any story is more than 130% of that for any adjacent story
- There is no Vertical Geometric Irregularity in the building

4.2.2.4 Vertical In-Plane Discontinuity in Vertical Elements Resisting Lateral Force

- Irregularity exists if the offset is greater than the width (d) or there exists a reduction in stiffness of the story below.
- here is no Vertical In-Plane Discontinuity in Vertical Elements Resisting Lateral Force in the building

4.2.2.5 Discontinuity in Capacity-Weak Story

Story	Load Case/Combo	VX Kip	VY kip	V present/V top	Status (>0.8)
OHWT	ex1	-33.057		-	
ROOF	ex1	-160.226		4.846961	Ok
5F	ex1	-286.239		1.78647	Ok
4F	ex1	-388.006		1.355532	Ok
3F	ex1	-466.219		1.201577	Ok
2F	ex1	-521.731		1.119069	Ok
1F	ex1	-555.953		1.065593	Ok
GF	ex1	-571.187		1.027402	Ok
OHWT	ey1	0	-33.057	-	
ROOF	ey1	0	-160.226	4.846961	Ok
5F	ey1	0	-286.239	1.78647	Ok
4F	ey1	0	-388.006	1.355532	Ok
3F	ey1	0	-466.219	1.201577	Ok
2F	ey1	0	-521.731	1.119069	Ok
1F	ey1	0	-555.953	1.065593	Ok
GF	ey1	0	-571.187	1.027402	Ok

4.3 Summary Table

SI No	Category	Item Name	Yes/No
1	Plan Irregularity	Torsional Irregularity	Yes
2		Re-entrant Corners	No
3		Diaphragm Discontinuity	No
4		Non-parallel System	No
5		Out-of-Plane Offsets	No
6	Vertical Irregularity	Stiffness Irregularity-Soft Story	No
7		Mass Irregularity	No
8		Vertical Geometric Irregularity	No
9		Vertical In-Plane Discontinuity	No
10		Discontinuity in Capacity-Weak Story	No

5 ADEQUACY OF STRUCTURAL MEMBERS

5.1 Adequacy of Column

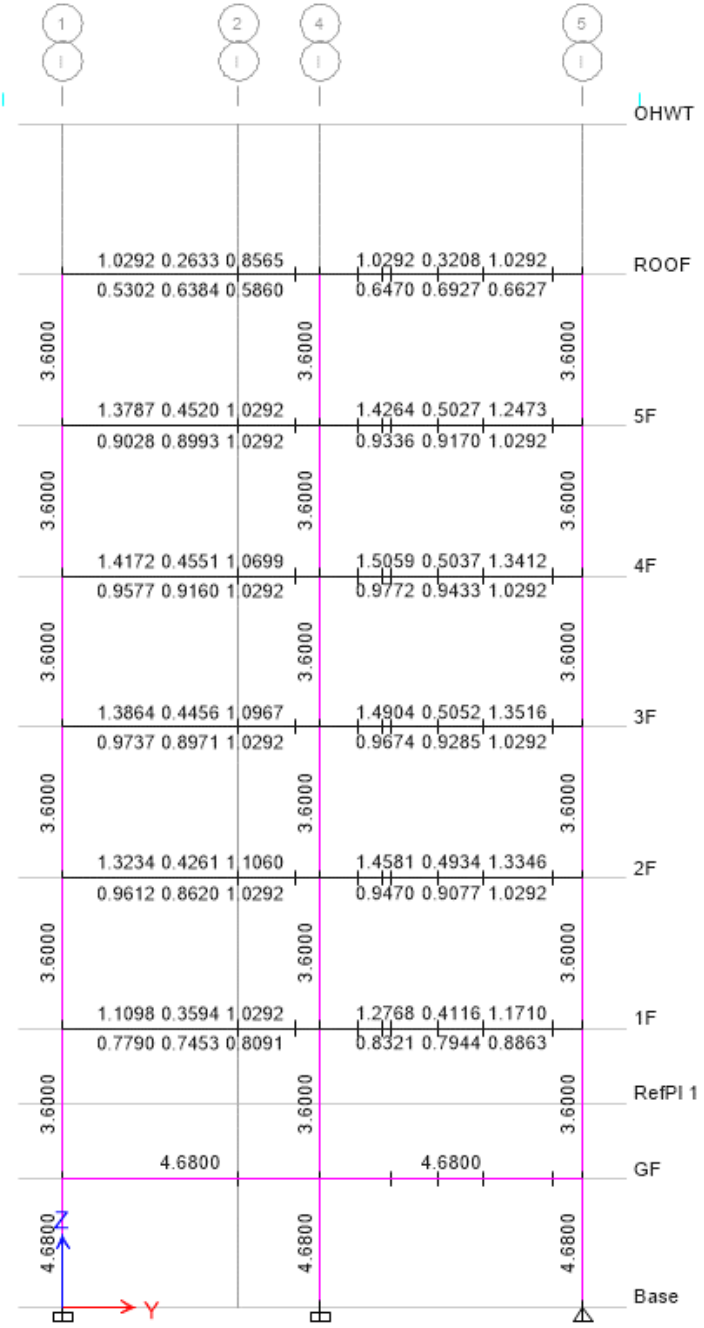

Figure 5.1: Column Longitudinal Reinforcements

Column Section: 15"X24"

Using #6 bar, No of Longitudinal bars required = 3.6/0.44 = 8.18 ≈ 10 nos.
Minimum stirrup Spacing, ACI-318: Center-to-center spacing of ties must not exceed the smallest of 16 longitudinal bar diameters, 48 diameters of the ties, or the smaller exterior column dimension.
16*6/8=12" or 48*3/8=18" or 15"
Using #3 @ 5" c/c

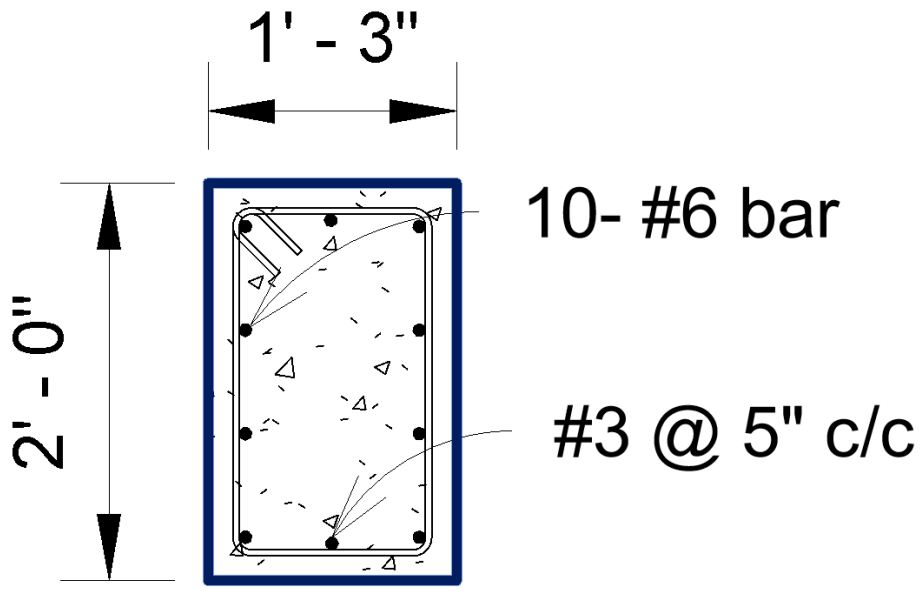

Figure 5.2: Cross section of Column

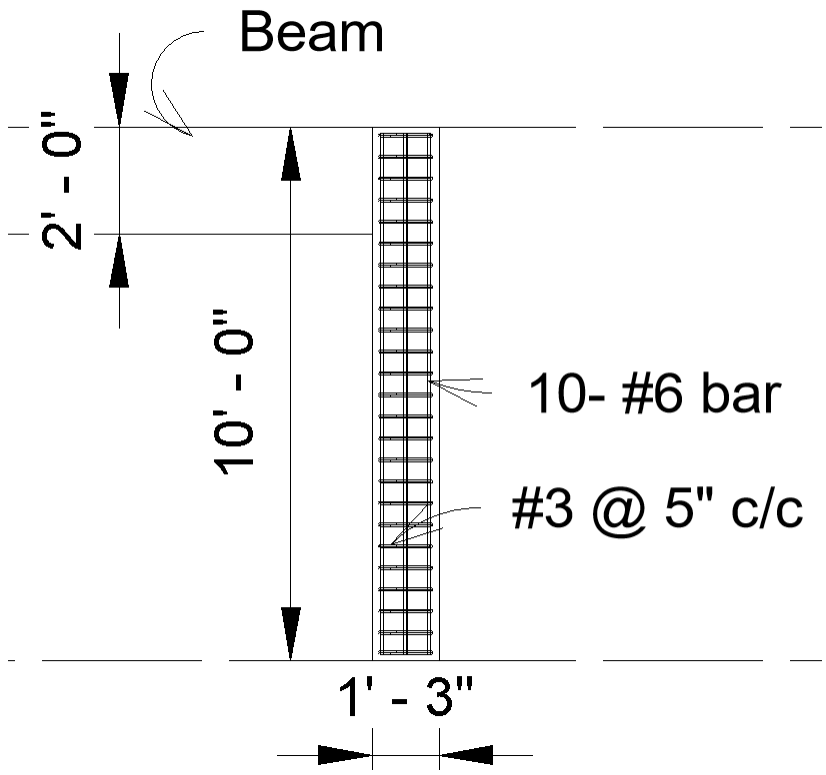

Figure 5.3: Long Section of Column

5.2 Adequacy of Beam

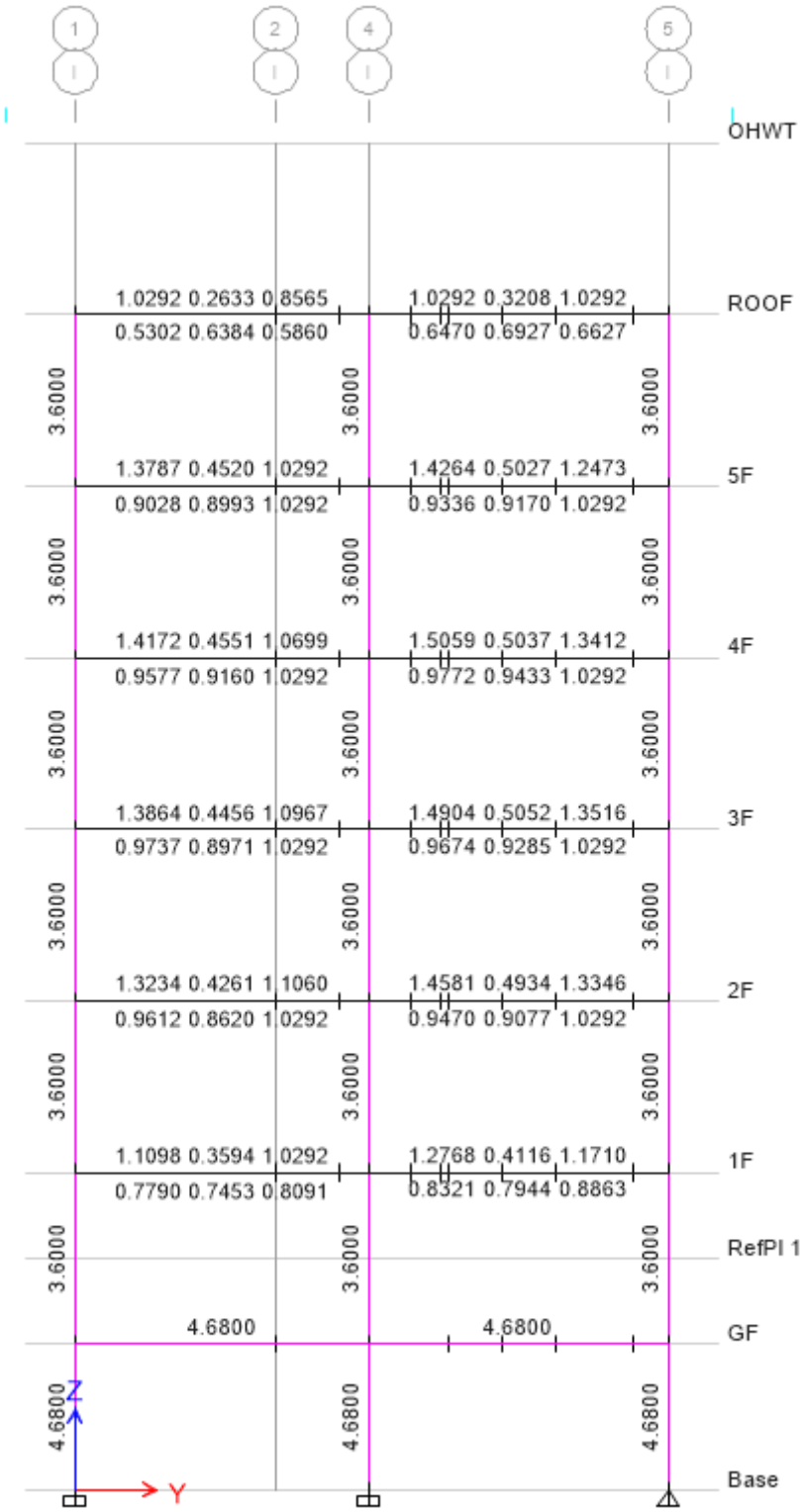

Figure 5.4: Longitudinal Reinforcement of Beam

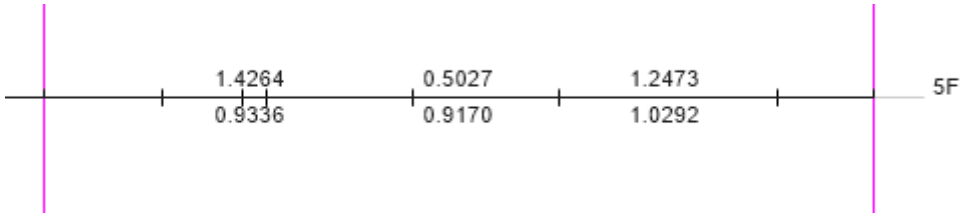

Depth = 24"

So, d = 24 – 2.5 = 21.5"

Lap splice are allowed for 50% of bars only where stirrups are provided @ $d/4 = 21.5/4 = 5"\ c/c$

Spacing of hoop within 2d = 2 * 21.5 = 43"

Beginning at ≤ 2"

At either end of a beam must be $\leq d/4 = 5",\ 8ds\ =\ 8\ *5/8\ =\ 5", So, Sacing = 5"c/c$

Elsewhere, $S_t = d/2 = 21.5/2 = 10"\ c/c$

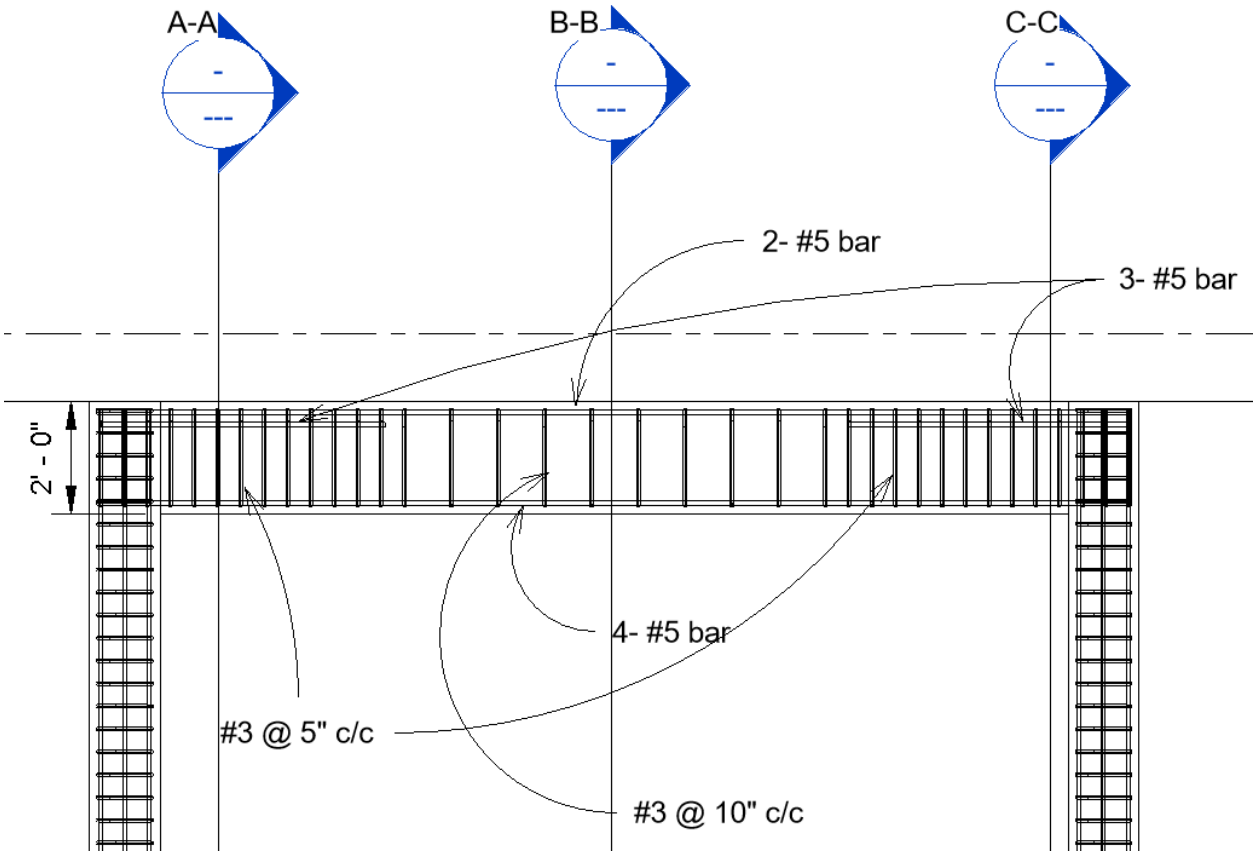

Figure 5.5: Longitudinal Section of Beam

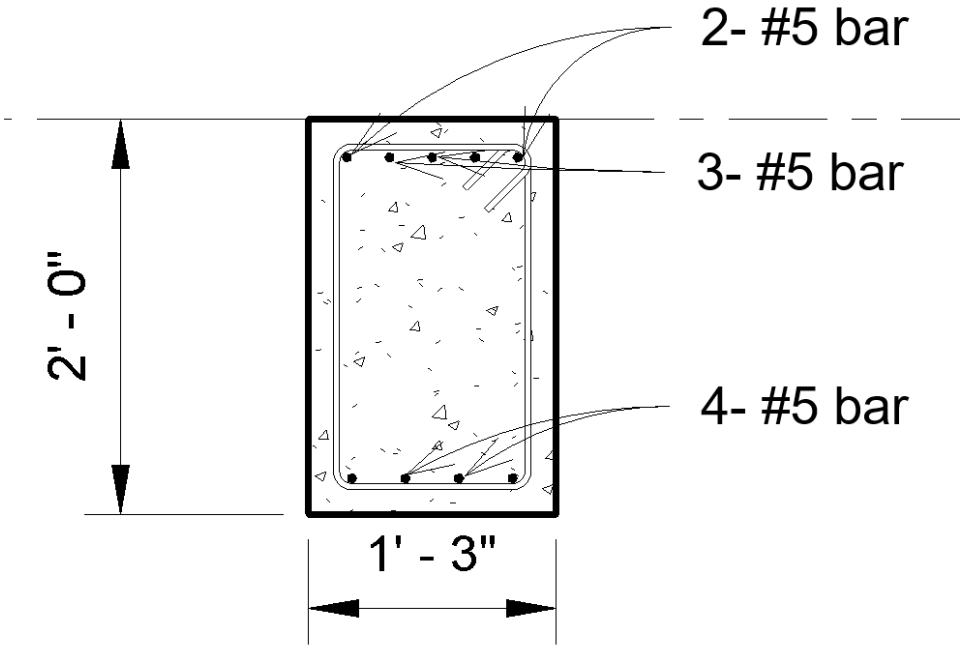

Figure 5.6 Section A-A and C-C of Beam

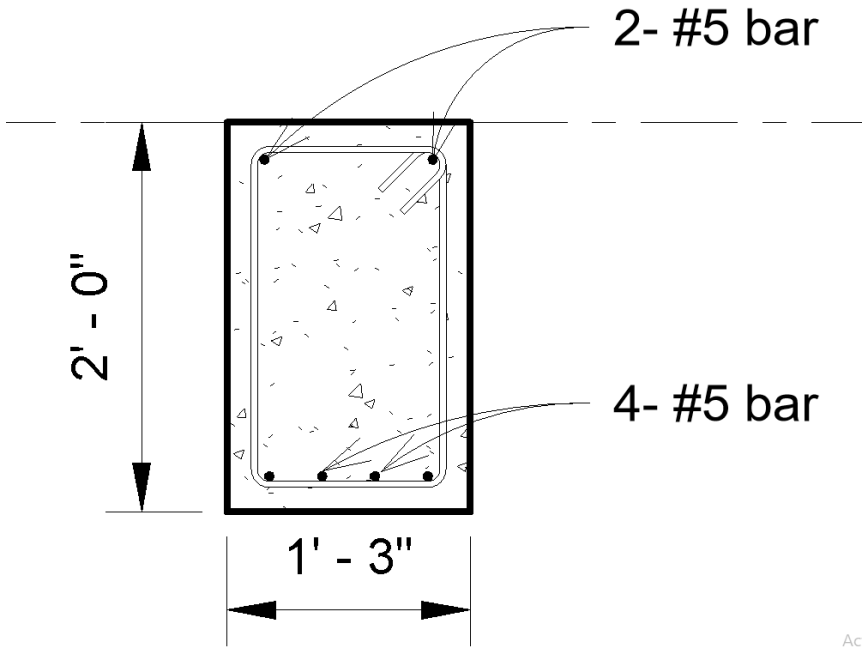

Figure 5.7: Section B-B of Beam

5.3 Adequacy of Shear Wall

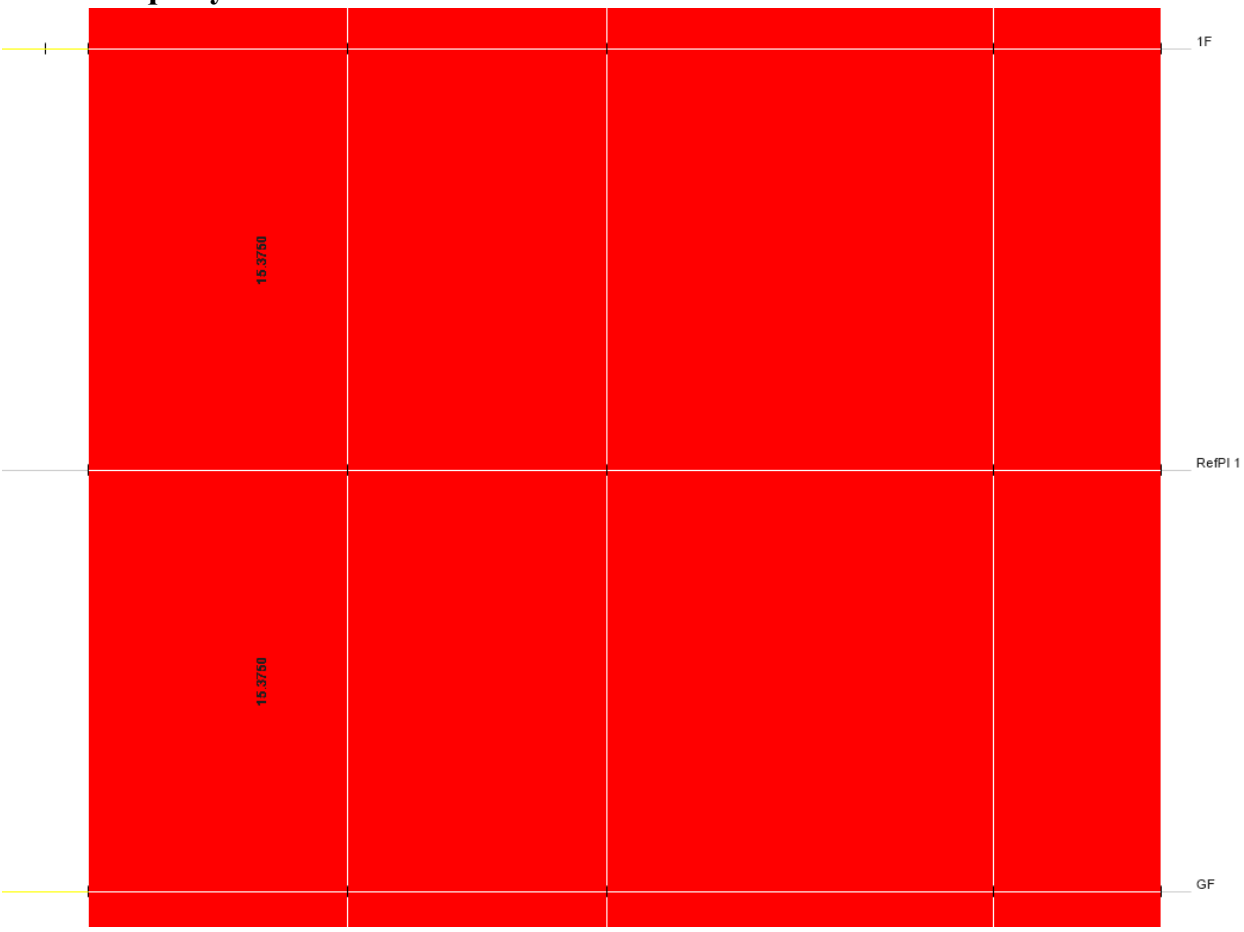

Figure 5.8: Longitudinal Reinforcement of Shear Wall

From shear design flexural reinforcement found 15.38 in^2

Using #7 bar, No of bar $\frac{15.38}{0.6} = 26\ nos$

At every face = $\frac{26}{2} = 13\ nos \approx 14\ nos$

Using 14 #7 bars on each side

For vertical reinforcement, Using 2-legged #3 bars

Spacing,

$$S = A_vh/(\rho_v\ h\ ) = (0.11 * 2)/(0.0025 * 10) = \ \ 8.8"$$

$$S = 3h = 30"$$

$$S = 18"$$

$$S = \frac{L_w}{3} = \frac{153}{3} = 51'$$

So Minimum spacing = 8" c/c sing 2-legged #3 bars

For horizontal reinforcement

Spacing

$S = L_w/5 = 153/5 = 30.6"$

$S = 3h = 30"$

$S = 18"$

$S = (0.11 * 2)/(0.0025 * 10) = \ \ 8.8"$

So Minimum spacing = 8" c/c sing 2-legged #3 bars

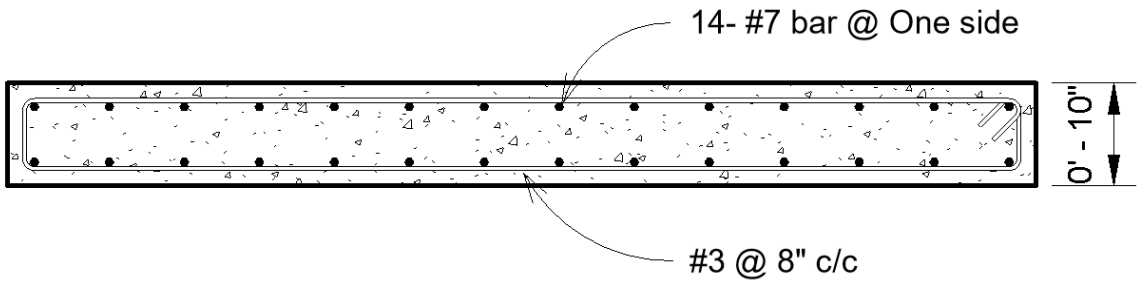

Figure 5.9: Cross Section of Shear Wall

5.4 Adequacy of Slab

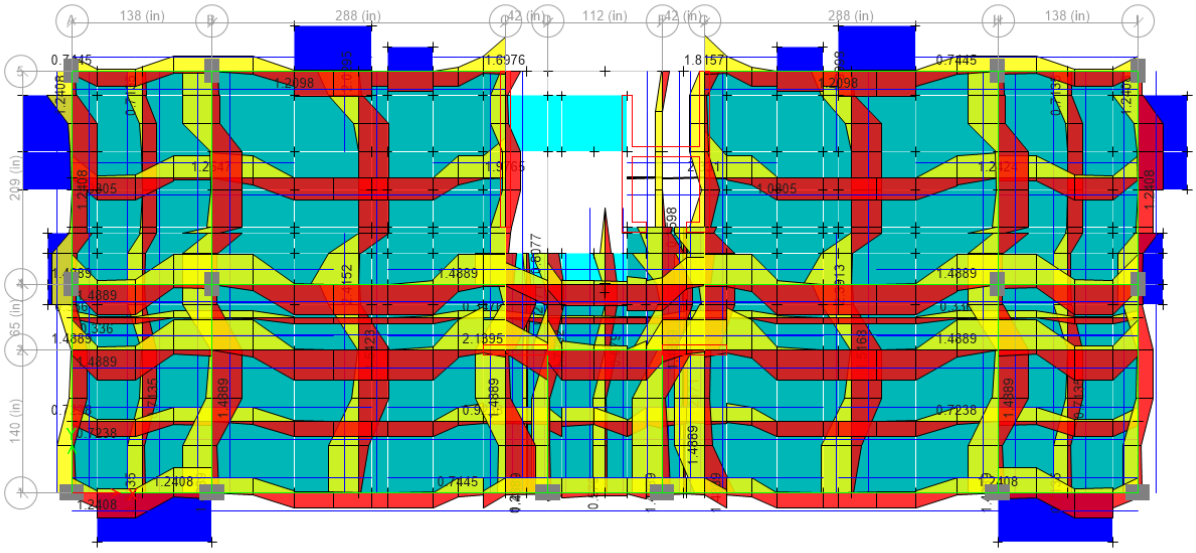

Figure 5.10: Slab reinforcement requirement

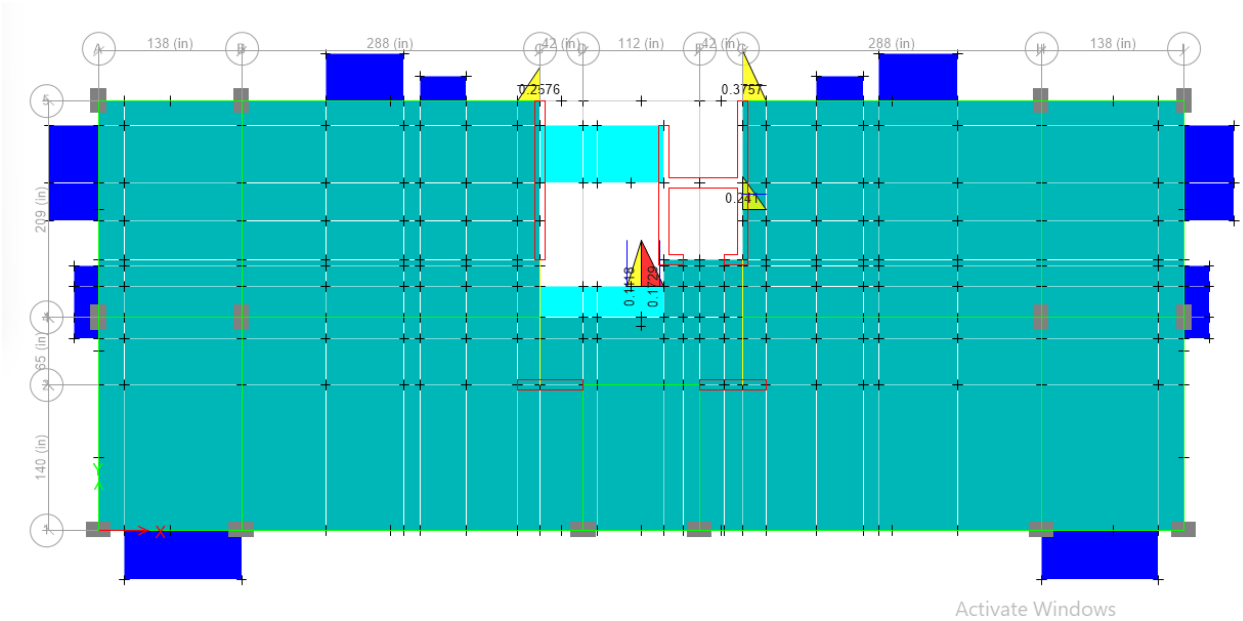

Figure 5.11: Slab Reinforcement Requirement after providing #4@ 10" c/c in both directions

So, #4@ 10" c/c alt. ckd + 1 #4 extra top @ Y and 4@ 10" c/c alt. ckd 2#4 extra top at X direction will be sufficient.

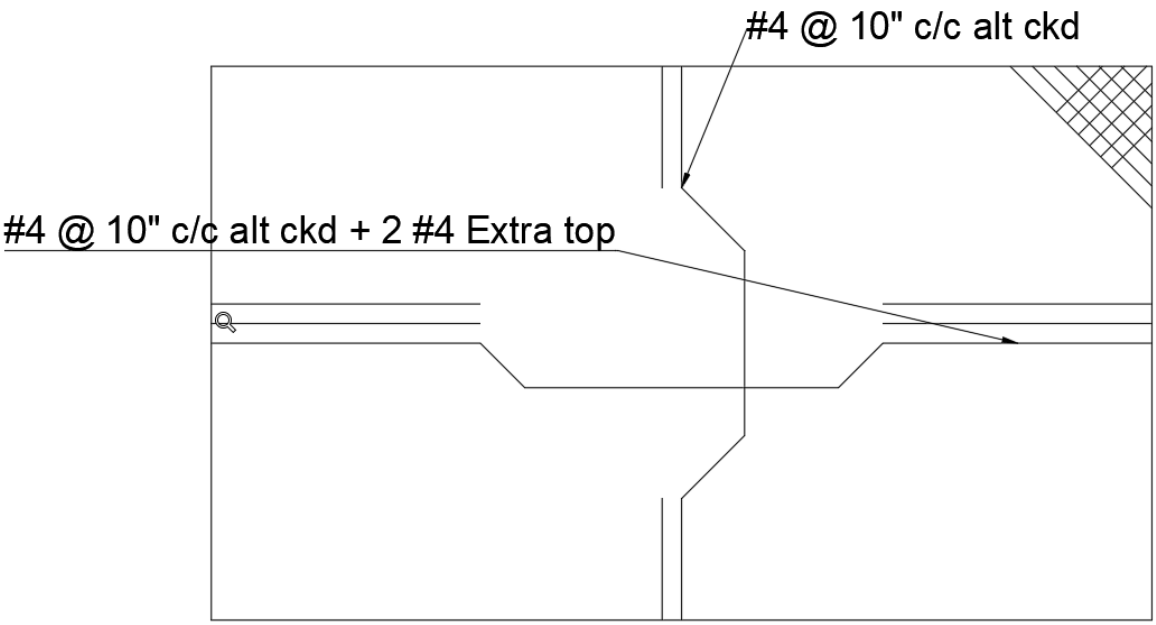

Figure 5.12 Slab reinforcement detailing for typical floor

5.5 Adequacy of Foundation

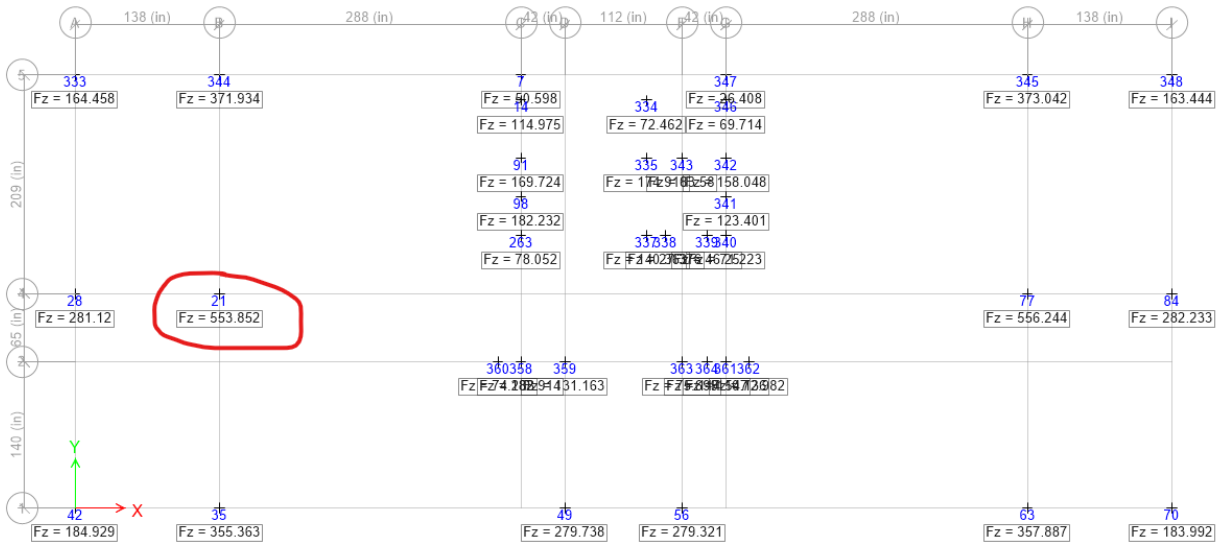

Figure 5.13: Column load

Here, Column Size = 15"X24"

$$f_c' = 3.4ksi$$

$$f_y = 62.67ksi$$

Allowable net bearing capacity of soil = 4 ksf

$$P(D + L) = 553.852kip$$

Footing Load $= 1.1 * 552.852 = 609.24kip$

Footing area $= \frac{609.24}{4} = 152.31ft^2 = 13ft * 13ft$

Effective depth, $d = 24"$

Punching shear area, $A_p = \left(2 * (C_1 + d) + 2 * (C_2 + d)\right) * d = (78 + 4d)d$

Punching shear strength, $= 4\phi\sqrt{f_c'} = 4 * 0.85 * \sqrt{3400} = 198.25psi = 0.198\ ksi$

Effective bearing pressure $= \frac{552.85}{13*13} = 3.27ksf$

$$0.198 * (78 + 4d)d = 552.85 - 3.27 * (15 + d)(24 + d)/12^2 \ => \ d = 18"$$

Here,

Flexural shear strength $= 2\phi\sqrt{f_c'} = 2 * 0.85 * \sqrt{3400} = 99.13psi = 14.27ksf$

Maximum flexural shear force $= 3.27 * \left(\frac{13-\frac{15}{12}}{2} - d\right) => 14.27 * 1 * d = 3.27 * \left(\frac{13-\frac{15}{12}}{2} - d\right) =>$

$d = 1.1' = 13.2"$

Footing thickness, $t = 18 + 4 = 22>13.2$

Total bending moment $= \frac{3.27*\left(\frac{\left(13-\frac{15}{12}\right)}{2}\right)^2}{2} * 10 = 564.33\ k-ft$

$f_c = 0.85f_c' = 0.85 * 3400 = 2980\ psi = 2.98ksi$

$\alpha = 0.72\ if\ f_c' \leq 4000psi$

$$\rho_{max} = \frac{(0.75 * 0.72 * 2.98)}{62.67} * \frac{87}{87 + 62.67} = 0.015$$

Now,

$$R_u = \phi\rho_{max}f_y\left(1 - 0.59\rho_{max} * \frac{f_y}{f_c'}\right) = 0.67$$

The depth required by M is $= \sqrt{\frac{M}{R_u b}} = 8.05 < 18"$ (Ok)

$$A_s = \frac{fc}{fy}\left(1 - \sqrt{1 - \frac{2M}{\phi f_c bd^2}}\right)bd = \frac{2.98}{62.67}\left(1 - \sqrt{1 - \frac{2 * 564.33 * 12}{0.9 * 2.98 * 13 * 12 * 18^2 *}}\right)13 * 12 * 18$$
$$= 6.85\ in^2$$

Minimum Reinforcement $= \frac{0.2}{f_y}bd = 8.96\ in^2(provided) > 6.85\ in^2$

Using #7 bars,

$A_s = .44\ in^2$

$$N = \frac{A_s}{A_s'} = \frac{8.96}{0.6} = 16\ nos$$

Spacing $= 13 * \frac{12}{16} = 9.5"\ c/c$ in both directions

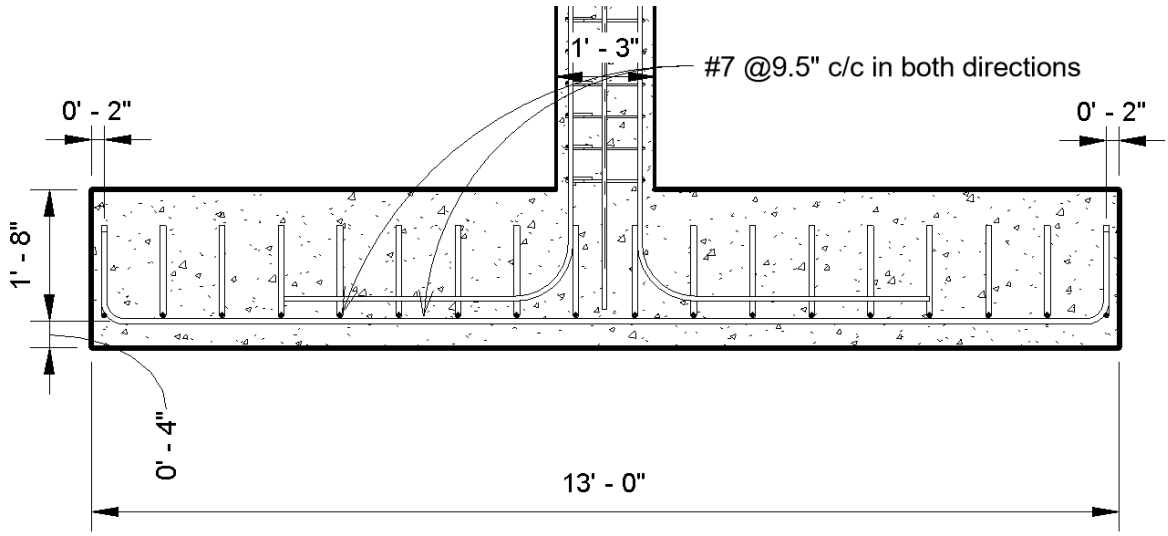

Figure 5.14: Detailing of Footing (Square footing)

6 CONCLUSIONS AND RECOMMENDATIONS

This project aimed to analyze and design a multi-story RC building in Sirajganj, Bangladesh, ensuring compliance with BNBC 2020. ETABS 16 software was used for numerical analysis. The following conclusions have been found from this work.

Key Findings:

- Structural Inadequacies: Significant structural deficiencies were identified in the building:
  - Beams: Multiple beams failed to meet structural requirements.
  - Columns: Several columns exhibited insufficient strength based on the beam-column ratio, indicating a potential violation of the "strong column-weak beam" principle.
  - Slabs: All slabs required further evaluation for structural adequacy.
- Torsional Irregularity: The building displayed torsional irregularity, a structural weakness that can affect performance under lateral loads like wind or earthquakes.
- Shear Walls: Fortunately, most shear walls and other structural elements appeared adequate.

6.1 Recommendations:

- Further modification in the Beam column section is needed.
- Multiple separate designs of structural elements are needed for a more economical design.