GP-800 occlusion wireless head manual

Version: 202411

catalogue

introduction.....3
use.....4
qualification.....5
Structure dimensions and port definitions.....6
gauge head.....6
acceptor.....7
Signal line color definition.....7
Input and output line level and open and closed state.....8
install.....9
Needle installation.....9
Measure the head and zero.....10
Relative position of the measuring head and the receiver.....11
Connection instances.....12
The FANUC-31i is installed with the GP-800 wireless measuring head.....12
hookup.....12
Programming instances.....13
Standard macro program.....13
Programming tutorial.....13
pay attention to:.....13
Common fault handling.....41
product list.....41

introduction

Thank you very much for choosing GP-800 wireless optical head measurement. I hope we can become your bosom friend in our cooperation.

In order to make your use of our products more conveniently, this user manual is specially configured for you. This manual is arranged to be comprehensive and fast, from which you can get the basic knowledge of installation, setting, operation, principle and other aspects. Please read this manual carefully before installation and use.

The copyright of this manual is owned by Decco Measurement Equipment Co., Ltd., and the reprinting or some reprinting of the book requires the permission of the Company. The Company will periodically modify the contents of this manual to adapt to the new functions and features of the product. The changes will be incorporated into the new version, and the Company reserves the right to make changes to the user manual without notice.

Thank you again for using the GP-800 wireless optical head measurement!

use

The GP-800 wireless header solution can save 90% of auxiliary time and improve process control.timesaver.reduction in the number of rejects. Maintain competitiveness.

1. For the processing centerRx

Advanced wireless transmission mode, with both standby time and trigger delay control. Excellent 3 D performance, capable of measuring stereo surface, high precision, channel selection, working distance up to 3m (can increase the receiving range by adapting multiple receivers); suitable for multiple processing centersLine 3 D measurement.

2. Workpiece testing head for cutting / grinding center

3. Find the right workpiece

Using the measuring head can save expensive cards and avoid the inconvenience of manual correction with the thousand meter. Mounted in the machining center of the spindle andThe head on the knife holder in the turning center brings the following benefits:

Reduce the machine tool downtime;

Automatic fixture, workpiece correction and rotation shaft setting; eliminate manual setting error;

reduction in the number of rejects;

Increase productivity and flexibility in bulk product sizes.

In the efficiency of piece testing

The head installed on the spindle and knife holder can also be used for sequential measurement and first piece detection — manual measurement depends on the skills of the operator and moving the workpiece to the coordinate machine Methods of detection are often not feasible. The benefits of the header testing include:

Measure the sequence works by automatically correcting the offset value;

Enhance the reliability of unmanned processing;

Adaptive processing, providing process feedback, reducing changes;

Use automatic paranoid update;

Shorten downtime for first test result.

4

qualification

parameter	unit		remarks
material quality		304+7075	
Find the outer diameter of the edge instrument	mm	42	
Probe thread	mm	M4	
Probe length	mm	Standard 30	Users can replace it by themselves
Probe ball head	mm	Φ 3 Ruby	
Hold the diameter	mm	8	
Hold the length	mm	25	
repeatability precision	mm	0.001	The structure is stable and reliable
XY route or distance of travel	mm	3	Beyond the trip will be damaged
Z route or distance of travel	mm	2.5	Beyond the trip will be damaged
Wireless transmission mode		2.4G wireless mode (simultaneously matching multiple receivers to increase distance)	
Wireless transmission distance	m	3	Dial-to-code Up to eight probes can be used at the same time
cell		14,250 dry battery	
Offline work		can	Can be used as a photoelectric division medium rod
Wireless work		can	Can be used in coordination with the system for automatic

			division
attended mode		wireless connections	Distance <3m
classification of waterproof		IP67	Can work in a coolant spray environment
voltage	V	DC5-24v	

Structure dimensions and port definitions

gauge head

acceptor

Signal line color definition

Line color	wiring	function
black	GND	The system supplies the power to the measuring head
red	5-24V	
brown	System boot-up io (input low level)	Startup & Shutdown
green	System chip (output low level)	Trigger signal output
yellow	System alarm io (output low level)	Signal interruption alarm
white	System battery alarm io (output low level)	Battery voltage alarm

Input and output line level and open and closed state

Head monitoring power supply status			The signal is normal		Signal interruption		The head measuring voltage is low	
	Line color	definition	Detection trigger	Untriggered	starting up	shut down	Detection trigger	Untriggered
High and low electricity Peace form	Black (input)	GND	0	0	0	0	0	0
	Red (input)	5-24V	1	1	1	1	1	1
	Brown (input)	starting up	0	0	0	-	0	0
	Green (output)	skip	0	1	1	1	0	1
	Yellow (output)	report to the police	1	1	0	1	1	1
	White (output)	low voltage	1	1	1	1	0	0
Description: 0-Low level 1-High level-suspended (input / output relative to receiver)								

If you need other levels, you can set the trigger mode through the system, or buy the high and low level conversion module by yourself.

8

install

Needle installation

Measure the head and zero

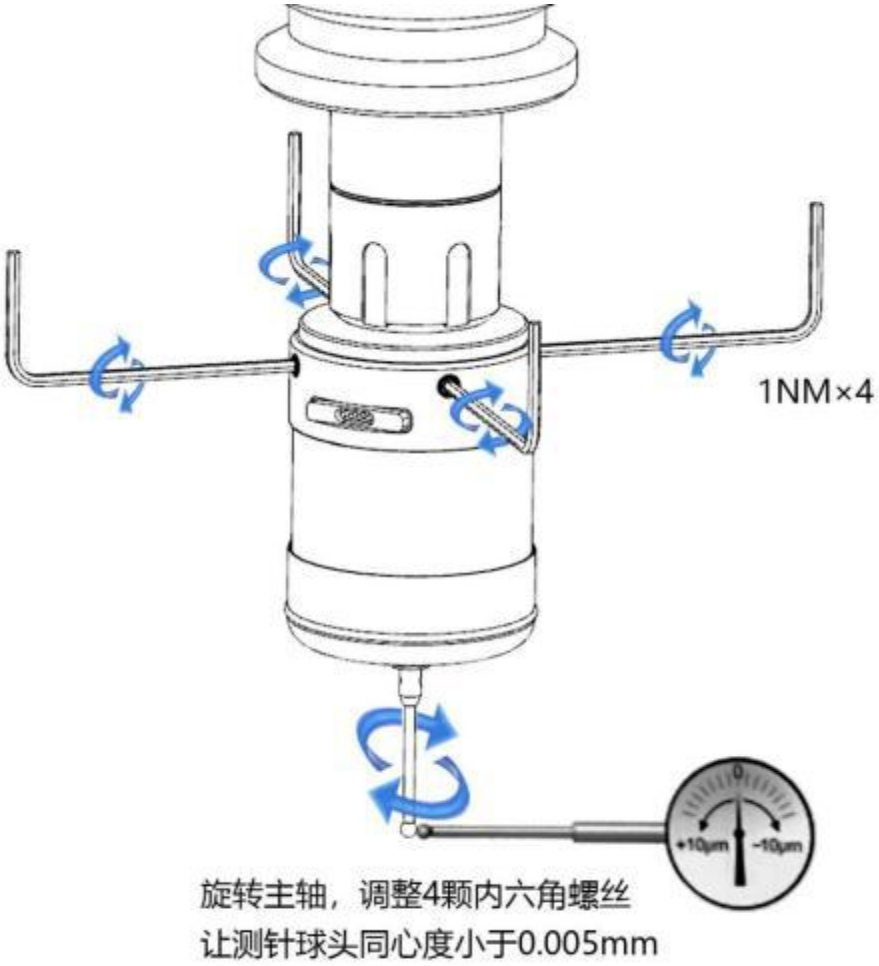

Position of measuring head and receiver

In order to stabilize the signal receiver and head distance <3m, a long distance relay can be used by installing multiple receivers.

Connection instances

The FANUC-31i is installed with the GP-800 wireless measuring head

hookup

Note the high and low levels of the system requirements, the following wiring is not considered, only the position

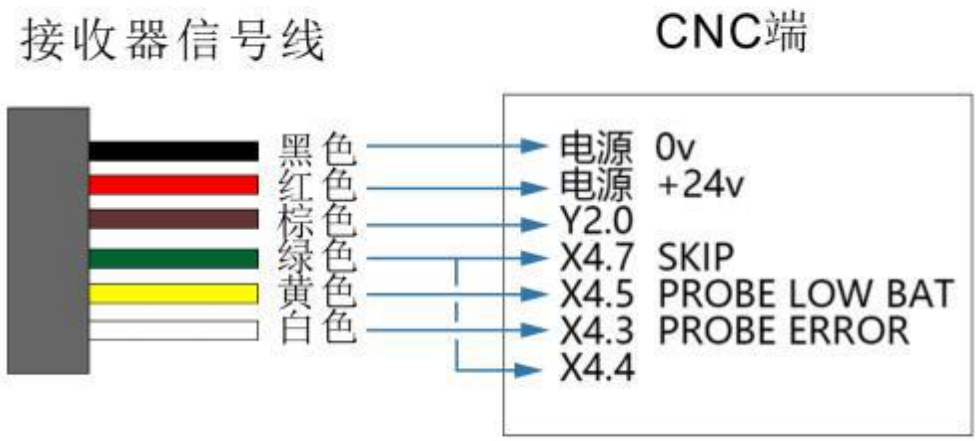

The parameter setting X4.4 shall be connected with X4.7

1.K17.2=1
Contact head
control effective
K23.0=1
Contact
head
K32.0=1
Between M38-M39 alarm 6200 # 7 SKF = 1 and the
rest is 0
6202 # 0=1 The rest is 0
2. Signal allocation of external interfaces:
Y2.0 is set to test
head open, X4.7 is
set to jump,
X4.5 is set as the head
battery drop, X4.4 is
set as the head state,
X4.3 as head error 4. Probe command switch:
3.M17: open the head, M18: close the head

Programming instances

Standard macro program

Scan the above QR code and download it with Baidu web disk.

Programming tutorial

pay attention to:

1. Rotate to open and close in the below, please use M17M18.
2. There will be some differences in different Settings and programming methods of the system. Please pay attention to the safety of operators and machine tools.
3. The following programming tutorial is for reference only. There may be bugs.

one. Calibration of GP-800 head: head calibration is the deviation of the head and the center line of the spindle, the length error of the head and the radius error of the probe ball.

1 A calibration head is required in the following situations:

A Using the first header.

A new probe is installed on the b measuring head.

C When probe bending or head collision is suspected.

And d periodically to compensate for the mechanical variation error of the machine.

E If the relocation of the head handle is poorly reproducible.

2 Place the Master of the known bore meridian (the standard block for calibration with the measuring head) on the bench and near the side of the main shaft.

A. Place the Master Master with a micrometer as shown in Figure 1

Horizontal fixation on the table surface after leveling in the X direction;

B. Use the thousand-dial score table to correct it

Master The central coordinate position of the inner hole (place it in G54X-Y-);

C. Install the test rod (Testbar) on the spindle, move the Z axis and measure the master position with the block gauge

Workbench as shown in Figure 2

And d. make the w axis at the origin position, such as the X square

Testbar Length =350.311mm block gauge length =30.00mm

The mechanical coordinate of the Z-axis is-1148.291mm (Figure 1)

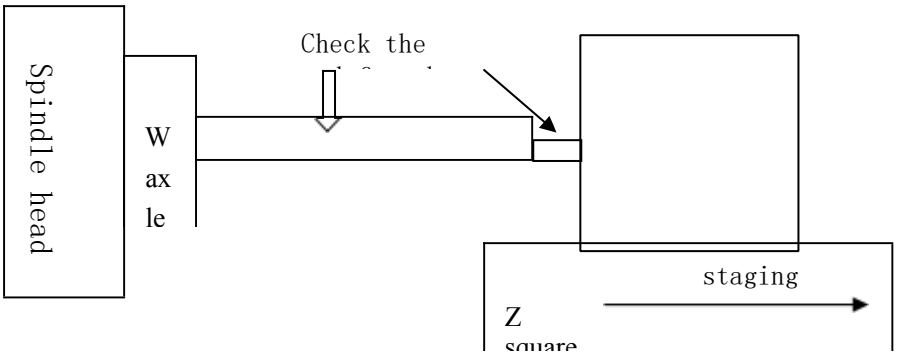

(Figure 2)

E. Set the work piece coordinate system Z=-1148.291+(-30.0)+(-350.311)=-1528.602mm for calibration (place it in G54Z--)

F. T1M06 (since T01 is reserved for the measuring head);

g. Install the measuring head on the spindle, clean the measuring ball and measure the beating of the measuring ball. If the beating is large, it needs to be adjusted (there are adjustment screws in the four directions of the measuring head handle);

H. The measuring head must be consistent and rotating every time it is installed into the spindle hole 180 degrees of reinstallation, in order to avoid errors;

3. Complete calibration head requires 09801, 09802, 09803 or 09804 program calibration procedures:

1. (09801) Calibration of measuring head length:

Calibrating the probe length (O9801)

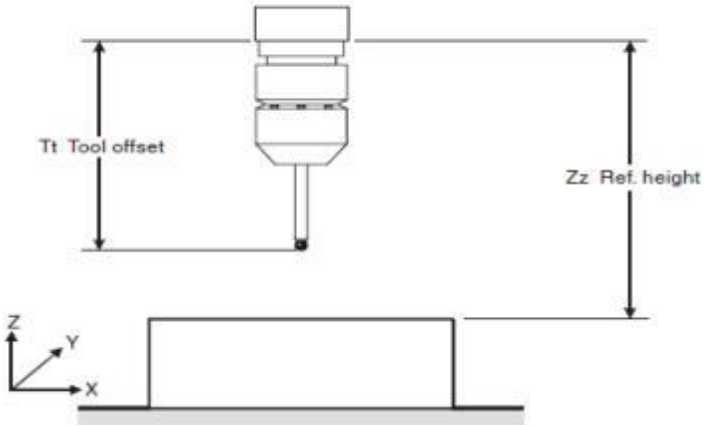

说明

把测头定位到用来进行标定的 Z 轴参考平面附近。循环完成后，测头实际的刀具偏置量根据这个参考平面的位置作了调整。

应用

先调用测头近似的刀具偏置值，然后把测头定位到贴近这个参考平面的位置。运行这个循环，测量该平面并把刀具偏置重新设定为一个新数值。循环完成后测头回到起始位置。

The format is as follows:
G65P9801ZzTt;
Example: Set the values of X, Y and Z
in the G54 workpiece coordinate system;
O0001
G90G80G40G
0 G54X0Y0
G43H01Z100. (Since the measuring head is usually set to T01, activate the number 1 correction and locate to 100mm
At) G65M17 (open measuring head contains spindle positioning)
G65P9810Z10.F3000 (Protect positioning movement)
G65P9801Z0T1 (Z-direction standard
Fixed, T1 indicates knife number)
G65P9810Z100 (protection location moved
to Z100.0)
G65M18 (Close the header)
G28Z100. (Reference point return)
H00 (cancel the knife replacement) M30
2 (O9802) The X and Y direction eccentricity of the calibration probe:

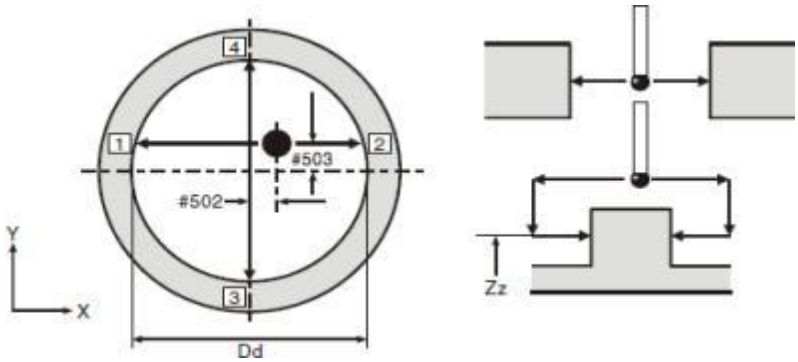

form:
G65P9802Dd Zz
The above D is the inner diameter value of the standard block, Zz when used when using the platform calibration, and hole calibration when omitted.
The following is the stored data

#502 = X-axis stylus offset

#503 = Y-axis stylus offset

例 2：标定探针的 X、Y 偏心（替代方法）

运行完整的定位及标定程序如下：

把型面准确的 X、Y、Z 位置设定到一个坐标系中（例子中使用 G54）。

O0002

G90G80G4

0G0

G54X0Y0

G43H1Z100

.

G65M17(ON)

G65P9810Z-5.0F30

00 G65P9802D50.0

G65P9810Z100.0F3

000G65M18(OFF)

G28Z100.0

H

0

0

M

3

0

3. Calibrate the radius of the header (O9803):

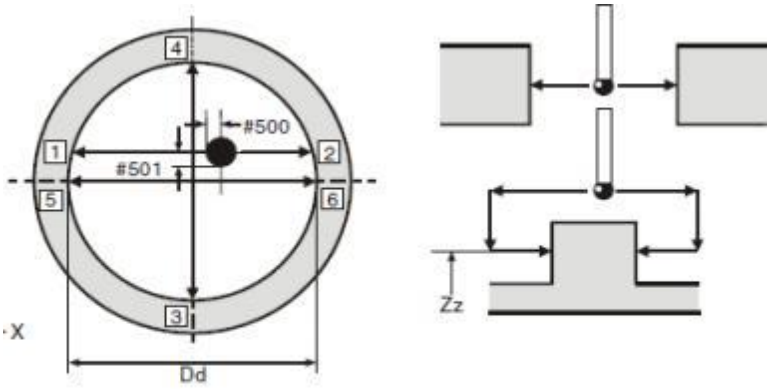

Figure 6.3 Calibrating the stylus ball radius

应用

首先把一环规固定到机床工作台上近似的已知位置，在主轴定向有效的情况下，把待标定的测头定位到环规内靠近中心的位置。

运行这个循环时，进行六次移动来确定探针球的半径值。循环完成后测头回到起始位置。

Format: G65P9803Dd {ZzSs}

remarks:

D: represents the inner diameter size of the ring gauge;

Z: mark the absolute measurement position of the Z axis with the external circle; if not set, mark S: S1 to S6 for G54 to G59S101 to S148 for G54.1P1 to

G54.1P48
Post-measurement data are stored in the following macro variables:
500=X +, X-,
the radius of
the probe ball #
501=Y +, Y-,

例 1：标定探针球的半径

使用本程序前，必须要激活一刀具偏置。如果机床没有保留这个偏置，则使用替代办法的例子。

把探针粗略地定位于环规中心位置，并位于所需的深度。

Radius of
the probe
ball, O0003
G90G80G40G
00
G65M17 (Rotation dozen
Open test head) (In the
G65P9803D50.001 inner
diameter
is
50.001 internal calibration) (Close head
G65M18 measurement)
M30

例 2：标定探针球的半径（替代方法）

运行完整的定位及标定程序如下：

设定型面近似的 X、Y、Z 位置到一工件坐标系中（例子中使用 G54）。

O0003
G90G80G40G
00 G54X0Y0
G43H1Z100.
G65M17 (Open the header)
G65P9810Z-5.F3000 (Protected positioning to the hole-5.0
Place) G65P9803D50.001 (with internal meridian
Ring gauge calibration of 50.001)
G65P9810Z100.F3000 (The protection type positioning absolute position is
100.0) G65M18 (Close head)
G28
Z10
0.
H00
M30

6. (O9804) Calibrate the vector radius of the probe ball

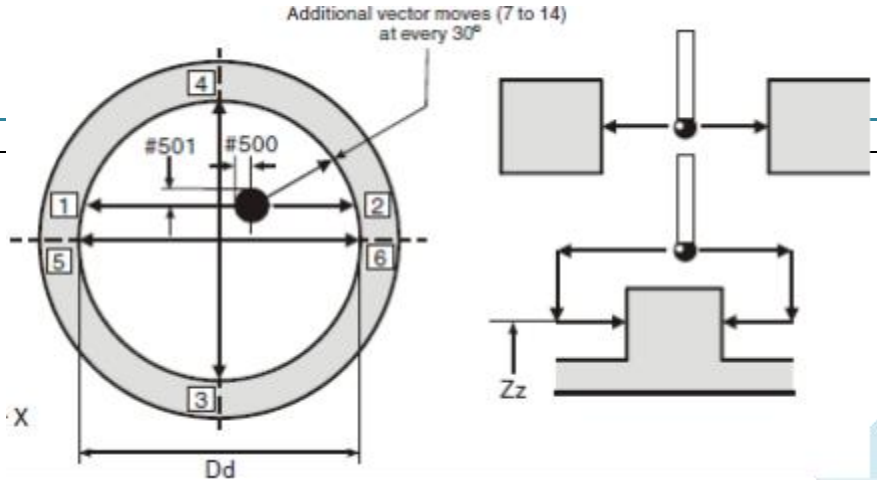
Additional vector moves (7 to 14)
at every 30°
#501
#500
1
2
3
4
5
6
X
Dd
Zz

Note: If the vector is used to measure O9821, O9822, or O9823, the cycle must be used to calibrate the radius of the probe ball. Do not calibrate with the program O9803

说明

把测头定位到已标定的环规内适合标定的深度。循环结束后，就会保存探针球的半径值。总共得到 12 个方向间隔为 30 度的半径的标定结果。

应用

首先把一环规固定到机床工作台上近似的已知位置，在主轴定向有效的情况下，把待标定的测头定位到环规内靠近中心的位置。

运行这个循环时，进行 14 次移动来确定探针球的半径值。循环完成后测头回到起始位置。

格式

G65P9804Dd [ZzSs]

Note:

D: The size of the calibrated ring gauge inside the meridian;

S: work piece coordinate system

S1~S6(G54~G59S)101~S148(G54.1P1~G54.1P48) Z: using the outer circle to represent the position of the Z axis, the ring regulation calibration time is omitted;

例 1：矢量探针球半径标定

使用本程序前必须激活一刀具偏置。如果机床没有保留这个偏置，则使用替代办法的例子。

把探针粗略地定位于环规中心位置，并位于所需的深度。

O0004

G65M17 (Open the header)

G65P9804D50.001 (ring with 50.001 in calibration)

G65M18 (Close the header) M30

O0003

例 2：矢量探针球半径标定（替代方法）

运行完整的定位及标定程序如下：

设定型面近似的 X、Y、Z 位置到一工件坐标系中（例子中使用 G54）。

G90G80G40G

00 G54X0Y0

G43H1Z100.

G65M17 (Open the header)

G65P9810Z-5.F3000 (Protected positioning to the hole-5.0 Place) G65P9804D50.001 (with internal meridian Ring gauge calibration of 50.001)

G65P9810Z100.F3000 (The protection type positioning absolute position is 100.0) G65M18 (Close head)

G28

Z10

0.
H00
M30

The above calibration can be done by using any of the following procedures"

A. Calibration method using the inner bore and surface

这个例子使用了一个已知中心位置及端部高度的、直径为 50.001 mm (1.9685 in)的环规。

运行这个程序之前、在刀具偏置寄存器中必须保存有近似的测头长度。设定型面准确的 X、Y、Z 位置到一工件坐标系中（例子中使用 G54）。

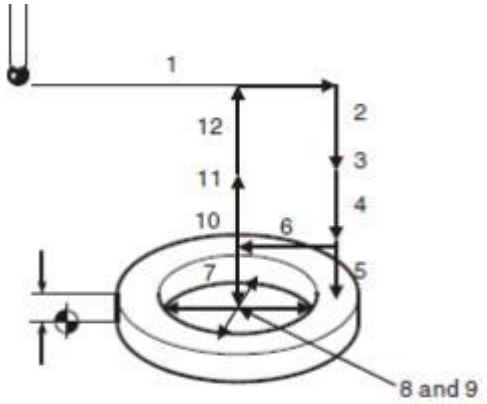

Figure 6.5 Full calibration in an internal feature

O0006;
0.G90 G80 G40 G0
1. G54 X35.Y0
2 G43H01Z100.0
3.G65M17 (open the header)
4.G65P9810Z30.F3000 (Protection moved to reference face)
5.G65P9801Z20.00T1 (Calibration head length)
6. G65P9810X0Y0 (protection moved to center of hole)
7. G65P9810Z5. (Protection moves inside the hole)
8. G65P9802D50. (hole calibration with 50mm aperture)
9.G65P9804D50.001 (hole calibration with 50.001mm)
10. G65P9810Z100.F3000 (protection back to reference face)
11. G65M18 (closed header) 12.G28Z100.
H
0
0

M
3

0

A. Calibration method using outer circles and surfaces

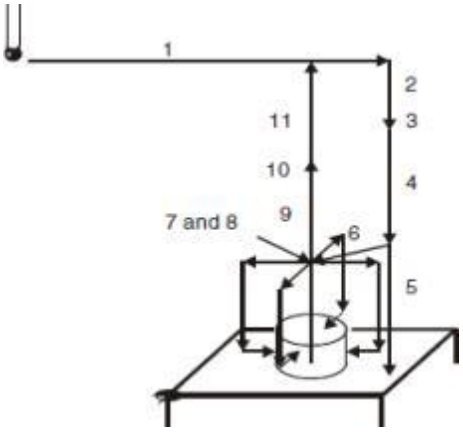

这个例子使用了一个已知中心位置及 Z 基准面，直径为 50.001 mm (1.9685 in)的塞规。

运行这个程序之前，在刀具偏置寄存器中必须保存有近似的测头长度。设定塞规准确的 X、Y 中心位置及 Z 面到一个工件坐标系的零点（例子中使用 G54）。

O0006

	G90G80G40G0	Preparatory codes for the machine.
1.	G54X135.Y100.	Move to centre of feature for height setting.
2.	G43H1Z100.	Activate offset 1, go to 100 mm (3.94 in) above.
3.	G65P9832	Spin the probe on (includes M19), or M19 for spindle orientation.
4.	G65P9810Z30.F3000	Protected positioning move above reference surface
5.	G65P9801Z0.T1	Calibrate the probe length. Z surface at zero.
6.	G65P9810X100.Y100.	Protected positioning move to centre.
7.	G65P9802D50.001Z10.	Calibrate on a 50.001 mm (1.9685 in) diameter pin gauge to establish the X,Y stylus offset.
8.	G65P9804D50.001Z10.	Calibrate on a 50.001 mm (1.9685 in) diameter pin gauge to establish the ball radius values, including the vector directions.
9.	G65P9810Z100.F3000	Protected positioning move retract to 100 mm (3.94 in).
10.	G65P9833	Spin the probe off (when applicable).
11.	G28Z100.	Reference return.
	H00	Cancel offset (when applicable)
	M30	End of program

For example, you can also write a program to scale the O0500
(BLOCK CARRY) G90G80G40G0 G54X15.Y0W0B0 G43H1Z100.
M52 (Probe is on)
G4X1. S100 M19
G65P9810Z30.F1000 (Protective positioning movement)
G65 P9801 Z0T1 (Head length calibration, Z is the reference surface position and T1 is activation 1 Number of knife repair)
G65P9810X0Y0 (Position to X0Y0) G65P9810Z-5. (Positioning Position to Z-5.0)
G65 P9802 D20.002 (The eccentricity of the calibration probe X and Y direction, D is the calibration object

Pore size) G65 P9804 D20.002 (The vector radius of the calibration probe ball, and D is the hole of the calibration object

footpath)

/G65P9830K13. (K13 multi-probe head number, K different measurement results are stored

Different location) (Position it to position Z100)

G65P9810Z100.

G00G49Z300.

M50

two. Measure the part

1. Procedure description:

A. Probe calibration procedure

09801: Calibration head length;

09802: the X and Y eccentricity of the calibration probe;

09803: Radius of the calibrated probe ball (09821~9823 not available) 09804: vectorial radius of the calibrated probe ball;

And b. Measurement cycle procedure

09810: protection positioning (i. e. the machine will stop when the moving head is touched);

09811: XYZ single plane measurement;

09812: abutment / groove measurement

09814: inner hole / outer circle measurement;

09815: Inner corner measurement;

09816: Outer corner measurement;

And c. Vector measurement cycles

09821: Single planar measurement with an Angle;

09822: Measurement of an angled abutment or groove

09823:3 point inner hole or outer circle measurement

d. extra circulation

09817: measuring points along the fourth axis of X distribution

09818: the fourth axis of measuring distribution along Y (method as above 09817)

09819: inner hole / outer circle measurement on PCD

09820: blank margin measurement;

2. Specific measurement methods:

A. Measurement of the inner hole / outer circle (09814):

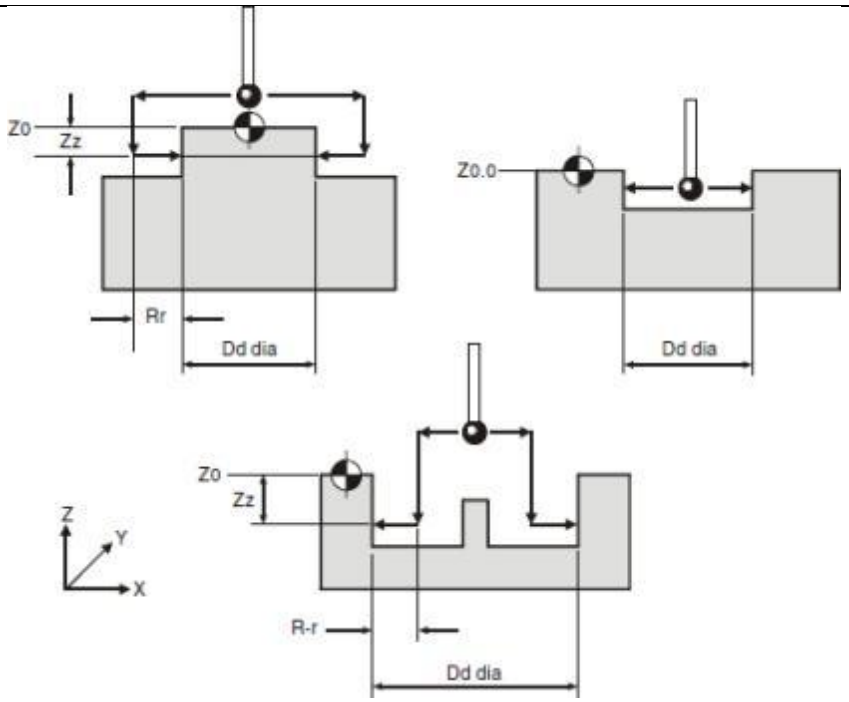

G65P9814Dd Or the G65P9814Dd Zz

Note: Diameter of the D face; Z: measure the absolute position of Z axis in the outer circle or the inner hole, if Z is omitted, assuming an inner hole cycle. Rr writes a negative number.

Example 1 measures one outside, namely

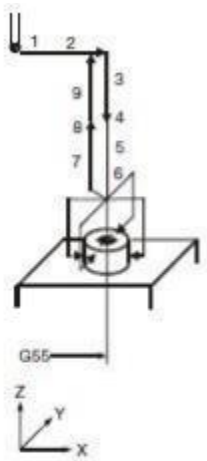

Figure 7.7
Probe movements

1.	T01M06	Select the probe.
2.	G54X0Y0	Start position.
3.	G43H1Z100.	Activate offset 1, go to 100 mm (3.94 in).
4.	G65P9832	Spin the probe on (includes M19), or M19 for spindle orientation.
5.	G65P9810Z10.F3000	Protected positioning move.
6.	G65P9814D50.Z-10.S2.R10.	Measure a 50.0 mm (1.968 in) diameter boss.
7.	G65P9810Z100.	Protected positioning move.
8.	G65P9833	Spin the probe off (when applicable).
9.	G28Z100.	Reference return.

continue

Example 2 Measure an inner hole (relative reference)

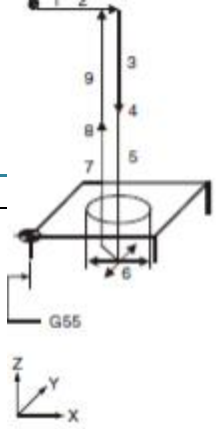

Figure 7.8
Probe movements

2.	G54X100.0Y100.	Start position.
3.	G43H1Z100.	Activate offset 1, go to 100 mm (3.94 in).
4.	G65P9832	Spin the probe on (includes M19), or M19 for spindle orientation.
5.	G65P9810Z-10.F3000	Protected positioning move.
6.	G65P9814D30.S2	Measure a 30.0 mm (1.181 in) diameter bore.
7.	G65P9810Z100.	Protected positioning move.
8.	G65P9833	Spin the probe off (when applicable)
9.	G28Z100.	Reference return

continue

representation G55

B. Measurement of the abutment / groove (09812)

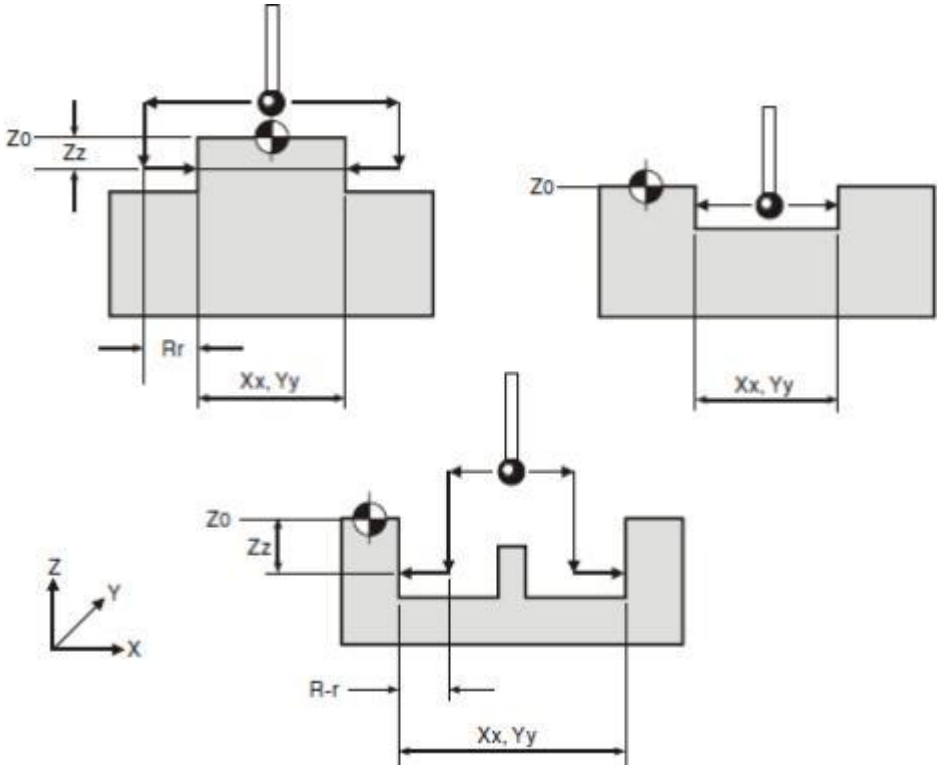

说明

本程序用于测量内孔或外圆。它使用了四次沿 X、Y 轴的测量移动。

应用

在测头及测头偏置有效的情况下，把测头定位到型面的中心线上，并位于合适的 Z 轴位置上。按照说明用适当的输入内容运行本循环。

form:
G65p9812Xx,
or
G65P9812Yy
or
G65P9812Xx
Zz or
G65P9812Yy Zz
Note: X: the distance measured when measuring in the X direction;: Y: the distance measured in the Y direction;
: Z: Measure the absolute position of Z on the platform or the groove with an obstacle. If Z is default, a groove is measured;

Example 1 Cam measurement

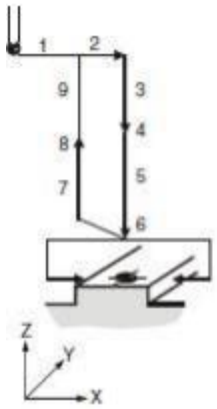

Figure 7.4
Probe movements

1.	T01M06	Select the probe.
2.	G54X0Y0	Start position.
3.	G43H1Z100.	Activate offset 1, go to 100 mm (3.94 in) above.
4.	G65P9832	Spin the probe on (includes M19), or M19 for spindle orientation.
5.	G65P9810Z10.F3000	Protected positioning move.
6.	G65P9812X50.Z-10.S2	Measure a 50.0 mm (1.968 in) wide web.
7.	G65P9810Z100.	Protected positioning move.
8.	G65P9833	Spin the probe off (where applicable).
9.	G28Z100.	Reference return.

continue

Example 2 recess measurement (relative reference)

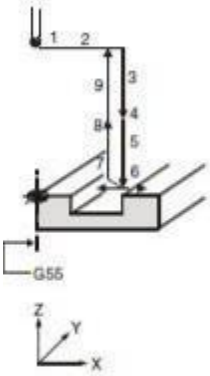

Figure 7.5
Probe movements

1.	T01M06	Select the probe.
2.	G54X100.Y50.	Start position.
3.	G43H1Z100.	Activate offset 1, go to 100 mm (3.94 in).
4.	G65P9832	Spin the probe on (includes M19), or M19 for spindle orientation.
5.	G65P9810Z-10.F3000.	Protected positioning move.
6.	G65P9812X30.S2	Measure a 30.0 mm (1.181 in) wide pocket.
7.	G65P9810Z100.	Protected positioning move.
8.	G65P9833	Spin the probe off (where applicable).
9.	G28Z100.	Reference return.

continue

c. Measurement of a single plane (09811)

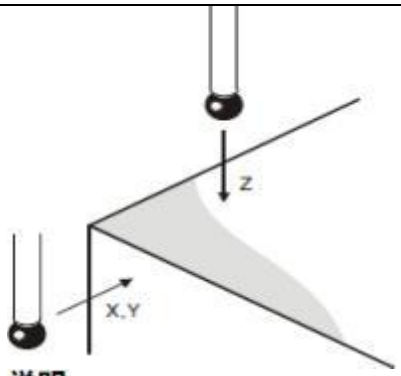

说明

本循环测量一个平面，以确定其尺寸或位置。

应用

在测头刀偏有效的情况下把测头定位在靠近表面的位置。执行循环测量该表面，测量完成后返回到起始位置。

There are two following possibilities:

1 The plane can be regarded as a knife change in size and Tt and Hh;

2 You can regard the plane as a reference plane position and adjust the coordinate system through Ss and Mm; format: G65 P9811Xx or Yy or Zz

Example: X and Z single surface measurement

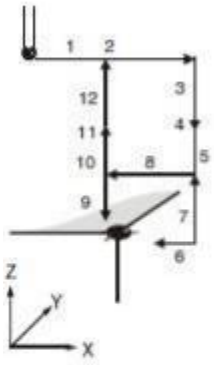

Figure 7.2
Probe movements

1.	T01M06	Select the probe.
2.	G54X-40.Y20.	Start position.
3.	G43H1Z100.	Activate offset 1, go to 100 mm (3.94 in).
4.	G65P9832	Spin the probe on (includes M19), or M19 for spindle orientation.
5.	G65P9810Z-8.F3000	Protected positioning move to start position.
6.	G65P9811X-50.T10.	Single surface measure.
7.	G65P9810Z10.	Protected positioning move.
8.	G65P9810X-60.	Protected positioning move.
9.	G65P9811Z0T11	Single surface measure.
10.	G65P9810Z100.	Protected positioning move.
11.	G65P9833	Spin the probe off (where applicable).
12.	G28Z100.	Reference return.

continue

D. (09815) inner corner measurement;

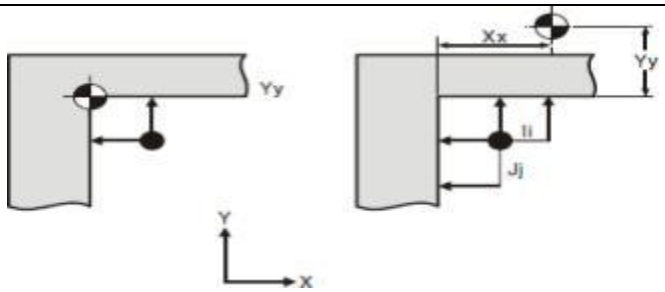

说明

这个循环用于确定拐角的位置。注意：即使拐角不是 90 度，也能找到实际的拐角交叉点。

应用

在测头刀偏有效的情况下，必须把测头定位于上图所示的起始位置。测头先测量 Y 平面，然后测量 X 平面。然后，测头返回起始位置。

循环过程中如果发生故障，测头返回起始位置。

Note: If I and J are omitted, only two measurement movements occur and the corner is assumed parallel to the axis; if I or J is omitted, three measurement movements occur and the corner is assumed to be 90 degrees; format: G65 P9815XxYy;

x　拐角 X 轴的公称位置。

y　拐角 Y 轴的公称位置。

输出下列内容：

1. 拐角位置。
2. 公差（若使用的话）。
3. X 轴方向的偏差。
4. Y 轴方向的偏差。
5. 零点偏置号（若使用的话）。

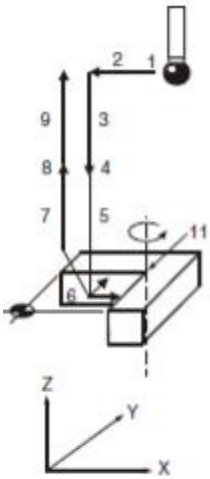

Figure 7.10
Probe movements

1.	T01M06	Select the probe.
2.	G54X10.0Y10.	Start position.
3.	G43H1Z100.	Activate offset 1, go to 100 mm (3.94 in).
4.	G65P9832	Spin the probe on (includes M19), or M19 for spindle orientation.
5.	G65P9810Z-5.F3000	Protected positioning move.
6.	G65P9815X20.Y20.I10.J10.	Corner find.
7.	G65P9810Z100.	Protected positioning move.
8.	G65P9833	Spin the probe off (where applicable)
9.	G28Z100.	Reference return.
10.	G17	Select plane.
11.	G68X#135Y#136R#139	Set rotational position and angle.
	continue machining	
12.	G69	Cancel rotation mode.

E. (09816) outer corner measurement;

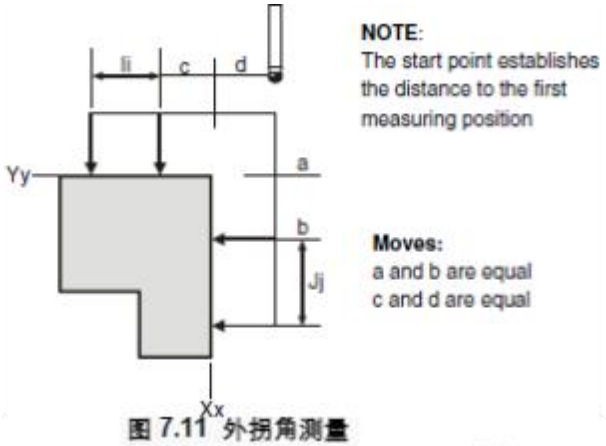

图 7.11 外拐角测量

移动：
a = b
c = d

说明

这个循环用于确定拐角的位置。注意，即使拐角不是 90 度，也能找到实际的拐角交叉点。

应用

在测头刀偏有效的情况下，必须把测头定位于图中所示的起始位置。测头先测量 Y 平面，然后测量 X 平面。然后，测头返回起始位置。

循环过程中如果发生故障，测头返回起始位置。

Format: G65 P9816 Xx Yy

x 拐角 X 轴的公称位置。

y 拐角 Y 轴的公称位置。

输出下列内容：

1. 拐角位置。
2. 公差（若使用的话）。
3. X 轴方向的偏差。
4. Y 轴方向的偏差。
5. 零点偏置号（若使用的话）。

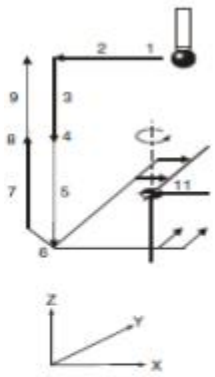

Figure 7.12
Probe movements

1.	T01M06	Select the probe.
2.	G54X-10.Y-10.	Start position.
3.	G43H1Z100.	Activate offset 1, go to 100 mm (3.94 in).
4.	G65P9832	Spin the probe on (includes M19), or M19 for spindle orientation.
5.	G65P9810Z-5.F3000	Protected positioning move.
6.	G65P9816X0Y0I10.J10.	Corner find.
7.	G65P9810Z100.	Protected positioning move.
8.	G65P9833	Spin the probe off (where applicable).
9.	G28Z100.	Reference return.
10.	G17	Select plane.
11.	G68X#135Y#136R#139	Set corner position and angle.
continue machining		
12.	G69	Cancel co-ordinate rotation mode.

F. (0) 9821

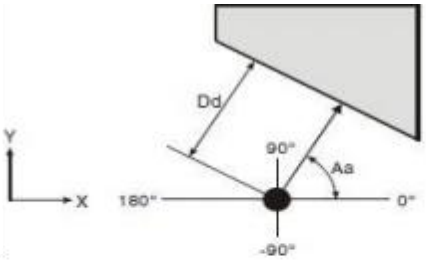

NOTE:
Angles in the range ±180 degrees
+Aa angles (counter-clockwise)

说明

此循环利用沿 X Y 轴的矢量测量移动来测量平面特征。

应用

在测头及测头偏置有效的情况下，把测头放到型面的期望参考位置，并位于合适的 Z 轴位置上。按照说明用适当的输入内容运行本循环。

Format: G65 P9821 Aa Dd

a 当从 X+方向测量时，测头的测量方向。

d 到表面的公称距离（径向）。

Example: Angled single surface measurement

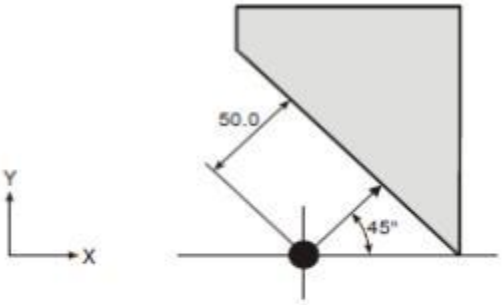

Figure 8.2 Measuring a single angled surface

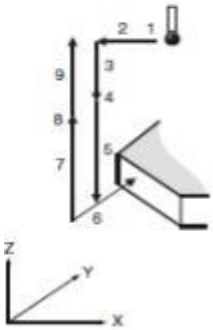

Figure 8.3
Probe movements

1.	T01M06	Select the probe.
2.	G54X-40.Y20.	Start position.
3.	G43H1Z100.	Activate offset 1, go to 100 mm (3.94 in).
4.	G65P9832	Spin the probe on (includes M19), or M19 for spindle orientation.
5.	G65P9810Z-8.F3000	Protected positioning move to start position.
6.	G65P9821A45.D50.T10	Single surface measure.
7.	G65P9810Z100.	Protected positioning move.
8.	G65P9833	Spin the probe off (when applicable).
9.	G28Z100.	Reference return.

Measurement of g. (09822)

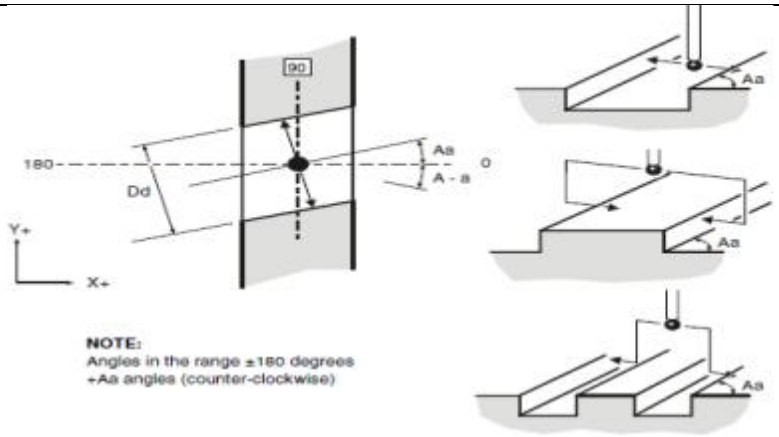

Figure 8.4 Measuring an angled web or pocket

说明

此循环利用沿 X Y 轴的两个矢量测量移动来测量凸台或凹槽。

应用

在测头及测头偏置有效的情况下，把测头定位到型面的中心线上，并位于合适的 Z 轴位置上。按照说明用适当的输入内容运行本循环。

Format: G65 P9822 Aa Dd

a 被测平面从 X+方向开始计算的角度。

d 型面的公称尺寸。

z 测量凸台时 Z 轴的绝对位置。如果省略这个参数，就会假定为一个凹槽循环。

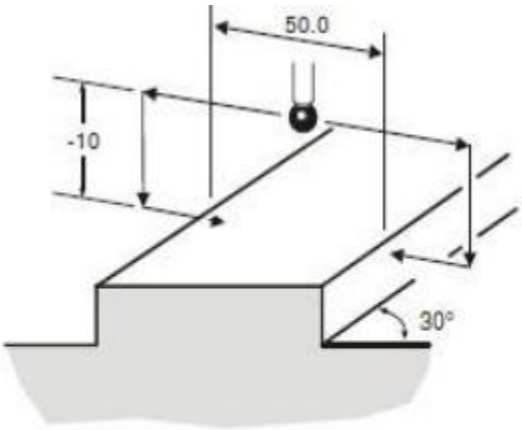

Figure 8.5 Measuring an angled web

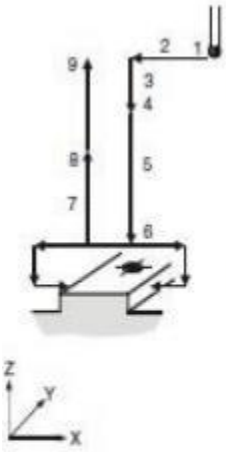

Figure 8.6
Probe movements

1.	T01M06	Select the probe.
2.	G54X0Y0	Start position.
3.	G43H1Z100.0	Activate offset 1, go to 100 mm (3.94 in).
4.	G65 P9832	Spin the probe on (includes M19), or M19 for spindle orientation.
5.	G65P9810Z10.F3000	Protected positioning move.
6.	G65P9822A30.D50.Z-10.S2	Measure a 50.0 mm (1.9685 in) wide web at 30 degrees.
7.	G65P9810Z100.	Protected positioning move.
8.	G65P9833	Spin the probe off (when applicable).
9.	G28Z100.	Reference return

continue

The feature centre line in the X-axis is stored in the work offset S02 (G55).

H. (09823) 3-point inner hole or outer circle measurement

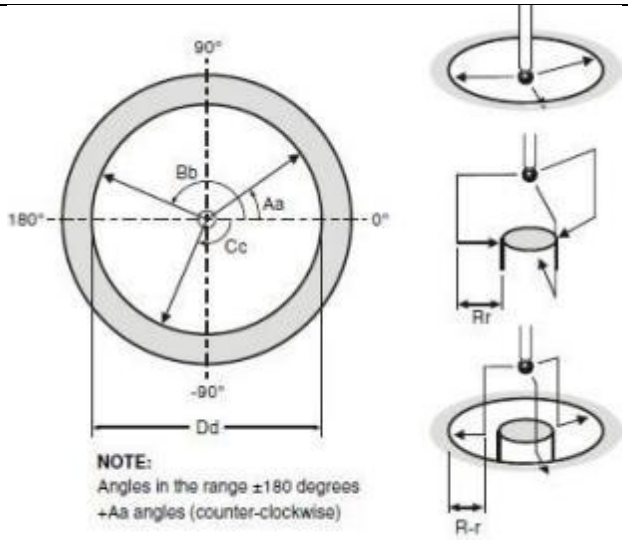

NOTE:
Angles in the range ±180 degrees
+Aa angles (counter-clockwise)

Figure 8.7 3-point bore or boss measurement

说明

本程序用三次沿 X Y 轴的矢量测量移动，测量内孔/外圆。

应用

在测头及测头偏置有效的情况下，把测头定位到型面的中心线上，并位于合适的 Z 轴位置上。按照说明用适当的输入内容运行本循环。

Format: G65 P9823 Aa Bb CcDd or G65 P9823 Aa Bb Cc Dd Zz

a 第 1 个矢量测量的角度，从 X+方向开始计算。

b 第 2 个矢量测量的角度，从 X+方向开始计算。

c 第 3 个矢量测量的角度，从 X+方向开始计算。

d 型面的公称尺寸。

z 测量外圆时，Z 轴的绝对坐标位置。如果省略这个参数，就会假定为一个内孔循环。

Example: 3-point bore measurement (referred datum)

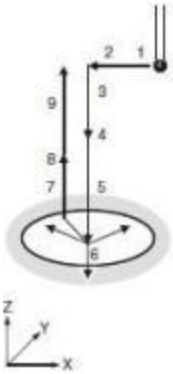

Figure 8.8
Probe movements

1.	T01M06	Select the probe
2.	G54X100.Y100.	Start position
3.	G43H1Z100.	Activate offset 1 go to 100 mm (3.94 in)
4.	G65 P9832	Spin the probe on (includes M19), or M19 for spindle orientation.
5.	G65P9810Z-10.F3000	Protected positioning.
6.	G65P9823D30.A30.B150.C-90.S2	Measure a 30.0 mm (1.181 in) diameter bore.
7.	G65P9810Z100.	Protected positioning move.
8.	G65P9833	Spin the probe off (when applicable).
9.	G28Z100.	Reference return

continue

The error of centre line is referred to the datum point X0,Y0 and the revised X0,Y0 position is set in work offset 02 (G55).

The h. (09817) measurement points are measured along the fourth axis of the X distribution

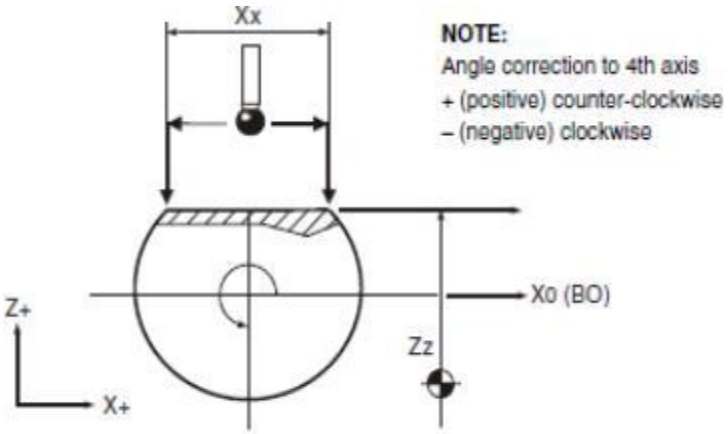

Figure 9.1 4th axis X measurement

说明

这个子程序的目的是找到两点（Z1 和 Z2）之间的一个平面的倾斜角，通过第 4 轴旋转来补偿表面误差。

应用

必须把第 4 轴定位于型面的期望角度位置 — 也就是说，使表面垂直于 Z 轴。如果使用了 R19 = s 输入，就会根据这个偏差量调整零点偏置寄存器。

注：对于绝大多数机床，需要重新指定零点偏置，并在这个循环之后移动到这个角度位置，以便激活新的零点偏置。

The coordinate system sets S

x　Z1、Z2 两个测量点之间的 X 向距离。

z　Z 轴的期望表面位置。

Outputs

#143　will show (Z1 - Z2) value

#144　will show angle correction value

#139　will show 4th axis measured position.

NOTE: Different machines and application may require the 4th axis system variable number to be changed. It will be achieved by editing macro O9817 when the macro is installed to suit your machine.

Edit as follows:

#3 = 4 (4th axis number) change axis number as required (see the Fanuc macro section for axis numbers)

Axis direction change

Edit as follows:

#4 = 1(1 = clockwise, and -1 = counter-clockwise) change as required.

Example: Set the 4th axis to a milled flat

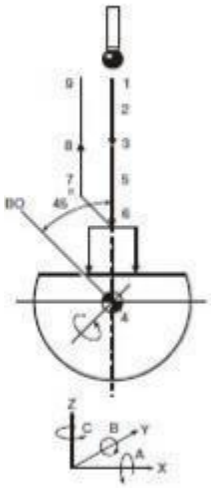

1.	T01M06	Select the probe.
2.	G43H1Z200.	Activate offset 1, go to 100 mm (3.94 in).
3.	G65P9832	Spin the probe on (includes M19), or M19 for spindle orientation.
4.	G0B45.	Position 4th axis to 45 degrees.
5.	G65P9810X0Y0Z20.F3000	Position 10 mm (0.394 in) above the surface.
6.	G65P9817X50.Z10.B5.	Measure at 50 mm (1.9685 in) centres, update G54 and set a tolerance of 5 degrees.
7.	G65P9810Z200.	Protected positioning move.
8.	G65P99833	Spin the probe off (when applicable).
9.	G28Z200.	Reference return.

Figure 9.2
Probe movements

continue

And i. (09843) Angle measurement of the X or Y plane

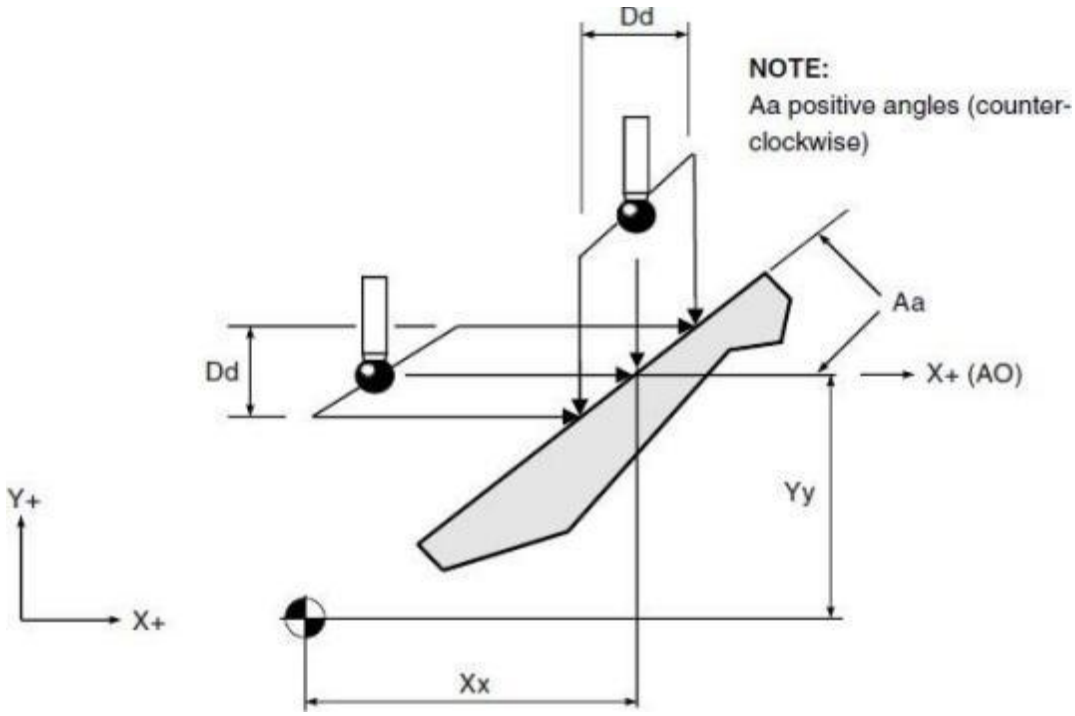

说明

这个循环在两个位置进行 X 或 Y 向测量，来确定表面的角度位置。

应用

为了提供一个适当的起始位置，必须把测头定位于表面的附近，并处于所要求的 Z 轴位置上。循环将产生对称于开始位置的两次测量，来确定表面角度。

Format: G65 P9843 Xx Dd or G65P9843Yy Dd

remarks: x 表面的中点位置。

Midpoint position of the y-table drawing.

D Moving distance between two measured positions parallel to the X axis or Y axis.

Example

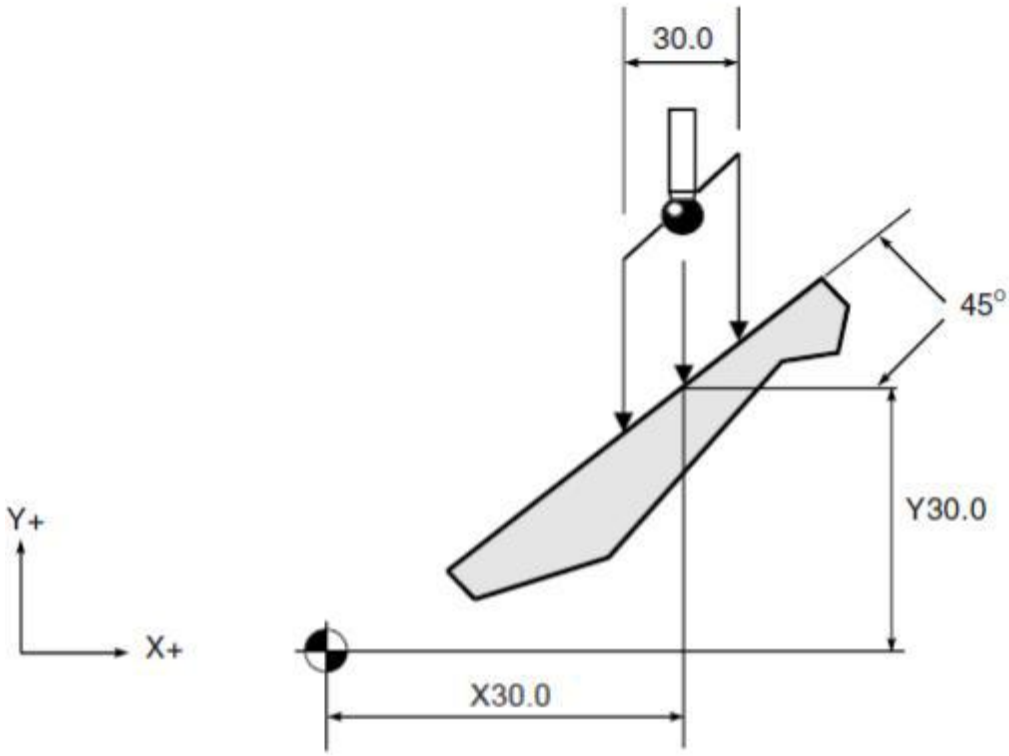

Figure 9.21 Example of an angled surface measurement

G65P9810 X30.Y50.Z100.F3000	Protected positioning move.
G65P9810 Z-15.	Protected move to start position.
G65P9843Y30.D30.A45.	Angle measure.
G65P9810 Z100.	Retract to a safe position.
continue	
G17	
G68G90X0Y0 R[#139]	Rotate co-ordinate system by the angle.

J. (O9834): Measure data between XY plane:
measure data between Z plane

(1) O9834: measure the data between the XY plane

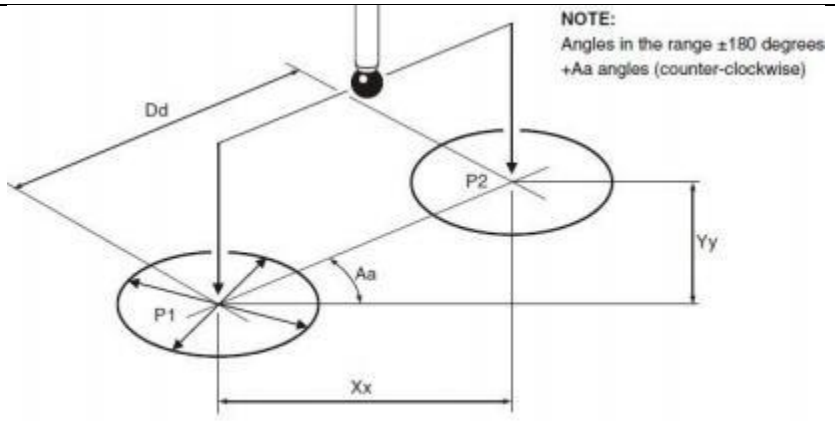

Figure 9.12 Determining feature-to-feature data in the XY plane

pour:

注：P1 和 P2 的次序非常重要，因为所计算的 P2 数据 是相对于 P1 的。

P1 的数值是在第 1 次测量循环之后，通过调用 L9834（不用任何输入内容）得到的。

P2 的数值是通过运行第 2 次测量循环得到的。型面与型面之间的数值是在第 2 次测量循环之后，通过加上适当输入，调用 L9834 得到的。

form:

G65 P9834Xx or G65 P9834Yy or G65 P9834 XxYy or G65 P9834 AaDd or G65 P9834

remarks:

x　X 轴方向的公称增量距离。

y　Y 轴方向的公称增量距离。

a　从 X+轴方向开始计算，P2 相对于 P1 的角度 (角度在±180 度之间)。

d　P1 和 P2 之间的最短距离。

Example 1　Measuring the incremental distance between two ho

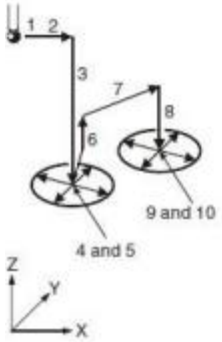

Figure 9.13
Probe movements

1.	G65P9810X30.Y50.F3000	Protected positioning move.
2.	G65P9810Z-10.	Protected positioning move.
3.	G65P9814D20.	P1 20 mm (0.787 in) bore.
4.	G65P9834	Store data.
5.	G65P9810Z10.	Protected positioning move.
6.	G65P9810X80.Y78.867	Move to new position.
7.	G65P9810Z-10.	Protected positioning move.
8.	G65P9814D30.	P2 30 mm (1.181 in) bore.
And either this		
9.	G65P9834X50.Y28.867M.1	Incremental distance measure with 0.1 mm (0.0039 in) true position tolerance.
or this		
9.	G65P9834A30.D57.735M.1	

Example 2: Surface to bore measurement

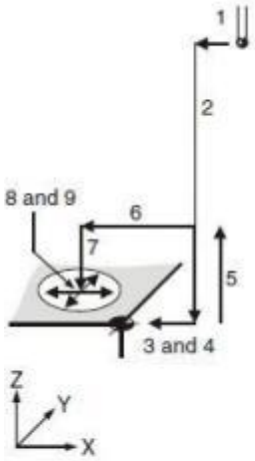

Figure 9.14
Probe movements

1.	G65P9810X10.Y50.F3000	Protected positioning move.
2.	G65P9810Z-10.	Protected positioning move.
3.	G65P9811X0.	P1 at X0 mm (0 in) position.
4.	G65P9834	Store data.
5.	G65P9810Z10.	Protected positioning move.
6.	G65P9810X-50.	Move to new position.
7.	G65P9810Z-10.	Protected positioning move.
8.	G65P9814D20.5	P2 20.5 mm (0.807 in) bore.
9.	G65P9834X-50.H.2	Measure distance -50 mm (-1.97 in)

(2) O9834: measure the data of plane to plane between Z plane

NOTE:
Angles in the range ±180 degrees
+Aa angles (counter-clockwise)

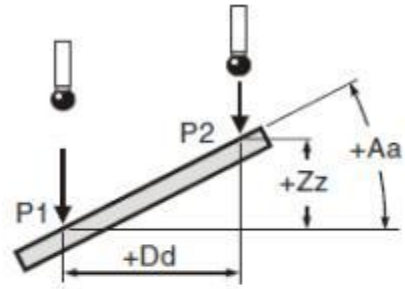

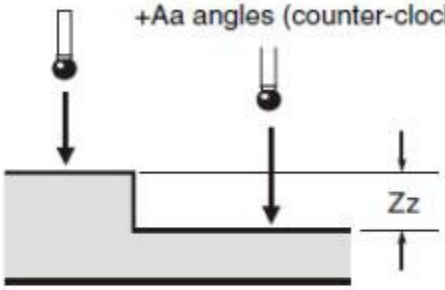

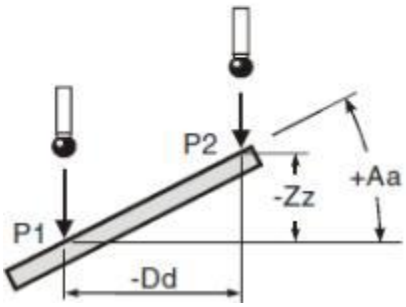

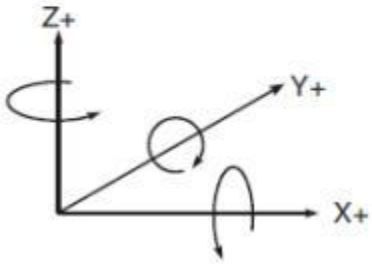

说明

这是一个无移动子程序。在两次测量循环之后使用它，目的是测定型面与型面之间的数据。

注：P1 和 P2 的次序非常重要，因为所计算的 P2 数据 是相对于 P1 的。

P1 的数值是在第 1 次测量循环之后，通过调用 L9834（不用任何输入内容）得到的。

P2 的数值是通过运行第 2 次测量循环得到的。型面与型面之间的数值是在第 2 次测量循环之后，通过加上适当输入，调用 L9834 得到的。

O9834

Format: G65 P9834Zz or

G65 P9834AaZz Or a G65 P9834DdZz or G65 P9834 description:

1. Updating a tool offset with T input is only possible if O9811 is used for P2 data. Otherwise an alarm (T INPUT NOT ALLOWED) results.

2. Angles. These are with respect to the XY. Use angles in the range ±180 degrees.

3. When G65P9834 (without any inputs) is used, then the following data is stored:

	from	to
	#135	#130
	#136	#131
	#137	#132
	#138	#133
	#139	#134

Inputs

Aa Zz or Dd Zz inputs

1. +Dd/-Dd values should be used to indicate the direction of P2 with respect to P1.

2. +Aa angles (counter-clockwise).

3. Angles between ±180 degrees.

Zz only input

+Zz/-Zz values should be used to indicate the direction of P2 with respect to P1.

The part must be entered:

Aa	a=	The angle of P2 with respect to P1 measured from the XY plane (angles between ±180 degrees).
Zz	z=	The nominal incremental distance in the Z axis.
or		
Dd	d=	The minimum distance between P1 and P2 measured in the XY plane.
Zz	z=	The nominal incremental distance in the Z axis.

Example 1: Measuring the incremental distance between two surfaces

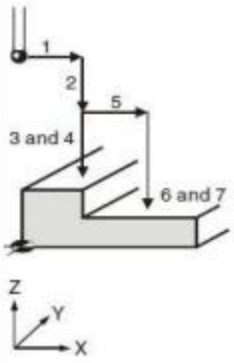

1.	G65P9810X30.Y50.F3000	Protected positioning move.
2.	G65P9810Z30.	Protected positioning move.
3.	G65P9811Z20.	P1 20 mm (0.787 in) surface.
4.	G65P9834	Store data.
5.	G65P9810X50.	Move to new position.
6.	G65P9811Z15.	P2 15 mm (0.591 in) surface.
7.	G65P9834Z-5.H.1	Feature to feature at -5.0 mm (-0.197 in).

Figure 9.16
Probe movements

Example 2: Measuring an angled surface

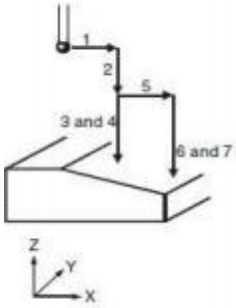

Figure 9.17
Probe movements

1.	G65P9810X30.Y50.F3000	Protected positioning move.
2.	G65P9810Z30.	Protected positioning move.
3.	G65P9811Z20.	P1 at 20 mm (0.787 in) position.
4.	G65P9834	Store data.
5.	G65P9810X77.474	Move to new position.
6.	G65P9811Z10.	P2 at 10 mm (0.394 in) position.
and either this		
7.	G65P9834D27.474Z-10.B.5	Measure slope -20 degrees (clockwise) angle tolerance ±5 degrees.
or this		
7.	G65P9834A-20.Z-10.B.5	

four. The meaning of

each macro variable

output variable- -Table

1

	A single plane	Cam / groove	The inner hole / outer circle	Inside the corner	The corner	The fourth axis	XY plane angle
	G65P9811	G65P9812	G65P9814	G65P9815	G65P9816	G65P9817/18	G65P9845
#135	X position	X position	X position	X position	X position		
#136	Y position	Y position	Y position	Y position	Y position		
#137	Z position						
#138	size	size	size				
#139				X face Angle	X face Angle	Fourth axis Angle	angle
#140	X bias in statistics	X bias in statistics	X bias in statistics	X bias in statistics	X bias in statistics		
#141	Y bias in statist	Y bias in statisti	Y bias in statist	Y bias in statistics	Y bias in statistics		

	ics	cs	ics				
#142	Z bias in statistics			Y face Angle	Y face Angle		
#143	dimensional discrepancy	dimensional discrepancy	dimensional discrepancy	Y angular deviation	Y angular deviation	Height deviation	Height deviation
#144				X angular deviation	X angular deviation	angular deviation	angular deviation
#145	Actual location deviation	Actual location deviation	Actual location deviation	Actual location deviation	Actual location deviation		
#146	Remus condition	Remus condition	Remus condition				
#147	direction indicator						
#148	Outpass mark (1 to 7)						
#149	Head measuring error mark (0 to 2)						

Output variable- - - - - - - - - - - -Table 2

	PCD bore / outside circle	The blank allowance	With Angle Pla	With Angle bulge Platform / groove	Three points inside the hole / outside Round measurement	Type surface to type surface
	G65P9819	G65P9820	G65P9821	G65P9822	G65P9823	G65P9817/ 34
#135	X position		Position X, starting from the starting point	X position	X position	X to incremental distance
#136	Y position		The Y position starting from the starting point	Y position	Y position	Y to incremental distance
#137	PCD					Z to incremental distance
#138	size		Start with the starting point a note of the scale in gongchepu cun	size	size	minimum range
#139	angle					angle
#140	X bias in statistics		X bias in statistics	X bias in statistics	X bias in statistics	X bias in statistics

#141	Y bias		Y bias	Y bias	Y bias	Y bias
#142	PCD bias in statistics					Z bias
#143	dimensional discrepancy		dimensional discrepancy	dimensional discrepancy	dimensional discrepancy	Minimum distance deviation
#144	angular deviation	crest value				angular deviation
#145	Actual location deviation	least value	Actual location deviation	Actual location deviation	Actual location deviation	Actual location deviation
#146	Remus condition	Change quantity (blank)	Remus condition	Remus condition	Remus condition	Remus condition
#147	The number of holes		direction indicator			
# 148 Omark (1 to 7)						
# 149 Head error flag (0 to 2)						

Common fault handling

equipment	unusual	cause	process mode
gauge head	Red light flash	The signal is weak	Adjust the receiver installation distance and angle
gauge head	The green light is not triggered	internal fault	Back to the factory
gauge head	White light bright	The battery voltage is low	Replace the battery
acceptor	The receiver power light is not on	The power supply is not entered	Check the wiring Confirm that the wiring is good, still not bright, return to the factory
acceptor	White light bright	Head cell voltage is low	Replace the battery
acceptor	Red light flash	The signal is weak	Adjust the receiver installation distance and angle

product list

1 wireless measuring head

1 ruby measuring needle (0.001 circle degree) and 1 signal receiver