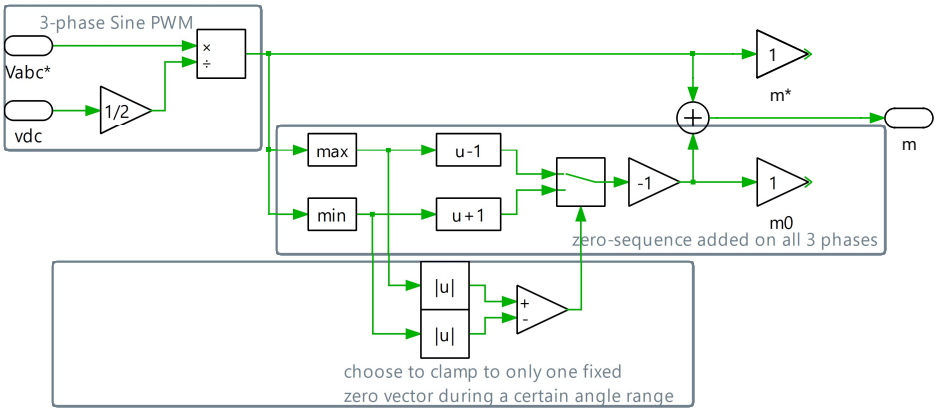
3-phase Sine PWM
Vabc*
vdc
1/2
1
m*
m
max
min
u-1
u+1
-1
1
m0
zero-sequence added on all 3 phases
|u|
|u|
+
-
choose to clamp to only one fixed
zero vector during a certain angle range