US010747562B2

(12) **United States Patent**
Khan et al.

(10) **Patent No.: US 10,747,562 B2**
(45) **Date of Patent: Aug. 18, 2020**

(54) **NESTED HYPERVISOR TO RUN VIRTUAL MACHINES ON PUBLIC CLOUDS**

(71) Applicant: **VMWARE, INC.**, Palo Alto, CA (US)

(72) Inventors: **Irfan Ulla Khan**, Bengaluru (IN); **Halesh Sadashiv**, Bengaluru (IN); **Jayalekshmy Nair**, Bengaluru (IN); **Keerthi B Kumar**, Bengaluru (IN)

(73) Assignee: **VMware, Inc.**, Palo Alto, CA (US)

(*) Notice: Subject to any disclaimer, the term of this patent is extended or adjusted under 35 U.S.C. 154(b) by 166 days.

(21) Appl. No.: **15/641,349**

(22) Filed: **Jul. 5, 2017**

(65) **Prior Publication Data**

US 2018/0314541 A1 Nov. 1, 2018

(30) **Foreign Application Priority Data**

Apr. 26, 2017 (IN) 201741014809

(51) **Int. Cl.**
G06F 9/455 (2018.01)

(52) **U.S. Cl.**
CPC ***G06F 9/45545*** (2013.01); ***G06F 9/45558*** (2013.01); *G06F 2009/4557* (2013.01); *G06F 2009/45566* (2013.01); *G06F 2009/45579* (2013.01); *G06F 2009/45583* (2013.01); *G06F 2009/45595* (2013.01)

(58) **Field of Classification Search**
CPC G06F 9/45558; G06F 2009/45566; G06F 2009/4557; G06F 2009/45579; G06F 2009/45583; G06F 2009/45595; G06F 9/45545
See application file for complete search history.

(56) **References Cited**

U.S. PATENT DOCUMENTS

10,108,446 B1 * 10/2018 Steinberg G06F 9/45558
2011/0072428 A1 * 3/2011 Day, II G06F 9/45558 718/1
2012/0131574 A1 * 5/2012 Day, II G06F 9/45558 718/1
2012/0260247 A1 * 10/2012 Huang G06F 9/45541 718/1
2014/0281118 A1 * 9/2014 Hepkin G06F 9/45533 711/6
2014/0282539 A1 * 9/2014 Sonnek G06F 9/45558 718/1
2015/0370594 A1 * 12/2015 Ghosh G06F 9/45533 718/1
2017/0192801 A1 * 7/2017 Barlev G06F 9/4555

* cited by examiner

Primary Examiner — Jacob D Dascomb

(74) *Attorney, Agent, or Firm* — Patterson + Sheridan, LLP

(57) **ABSTRACT**

An example method of provisioning a virtual machine in a cloud system includes: receiving a request to provision the virtual machine in the cloud system; provisioning a first virtual machine managed by a hypervisor executing on a host computer in the cloud system, the hypervisor allocating resources to the first virtual machine; provisioning a nested hypervisor in the first virtual machine; and provisioning the virtual machine to execute on the nested hypervisor without re-virtualizing the resources allocated by the hypervisor to the nested hypervisor.

17 Claims, 4 Drawing Sheets

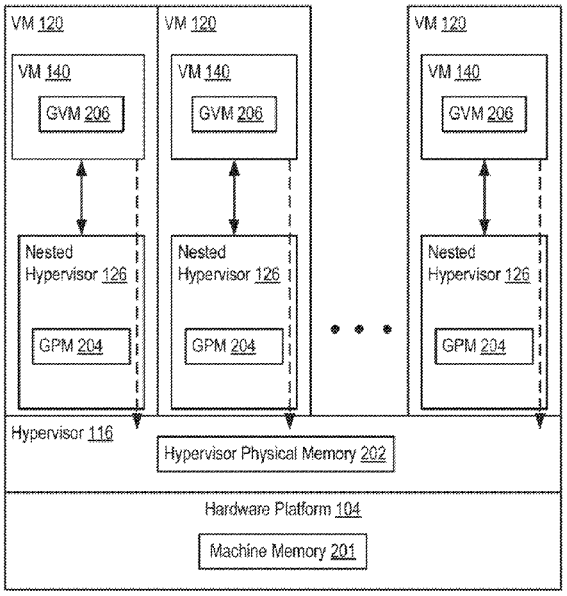

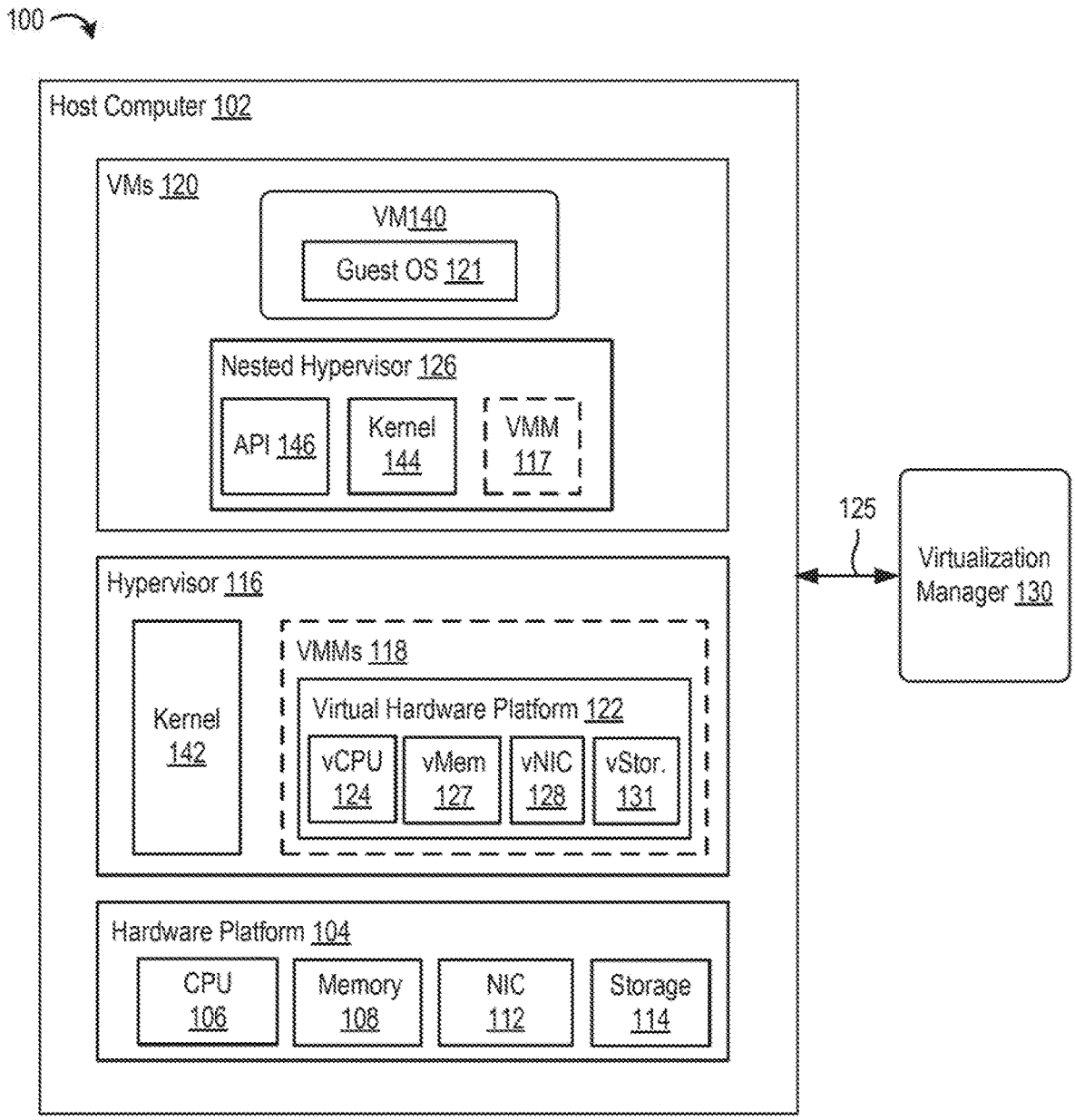
100
Host Computer 102
VMs 120
VM140
Guest OS 121
Nested Hypervisor 126
API 146
Kernel 144
VMM 117
Hypervisor 116
Kernel 142
VMMs 118
Virtual Hardware Platform 122
vCPU 124
vMem 127
vNIC 128
vStor. 131
Hardware Platform 104
CPU 106
Memory 108
NIC 112
Storage 114
125
Virtualization Manager 130

FIG. 1

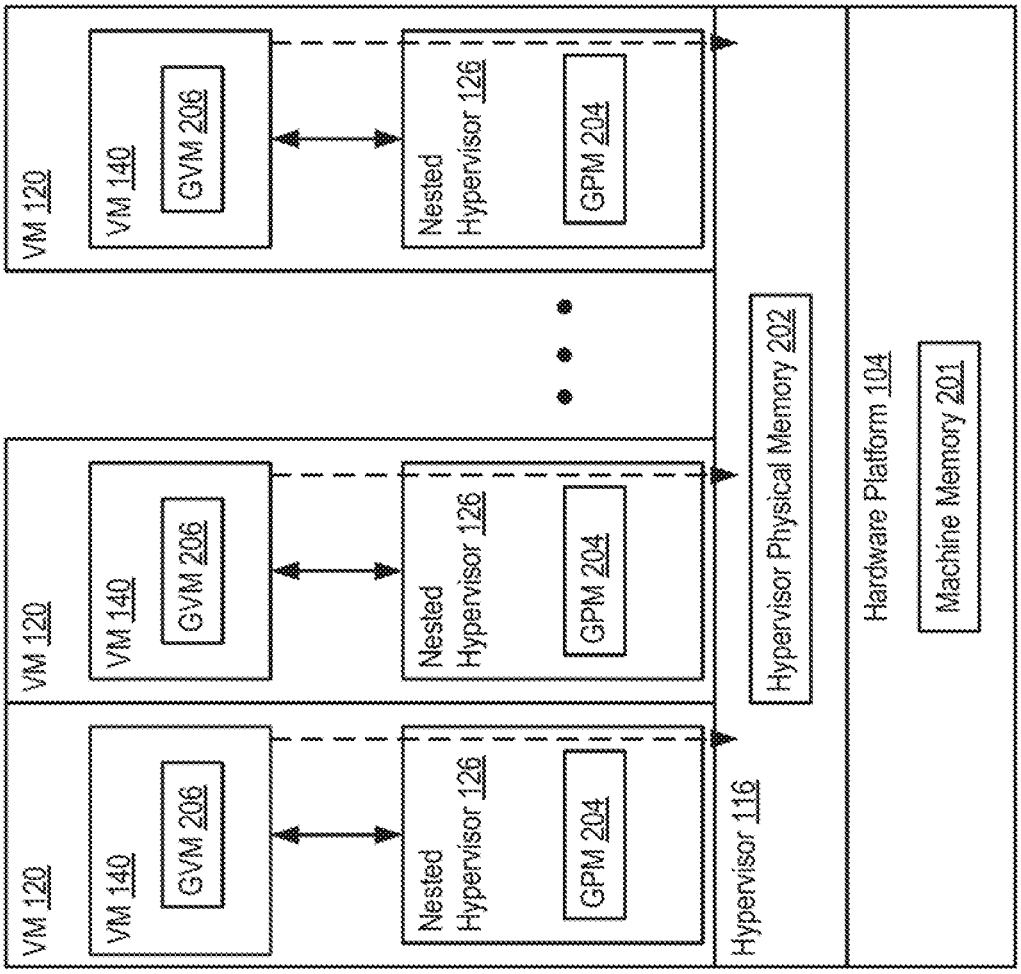
VM 120
VM 140
GVM 206
Nested Hypervisor 126
GPM 204
VM 120
VM 140
GVM 206
Nested Hypervisor 126
GPM 204
VM 120
VM 140
GVM 206
Nested Hypervisor 126
GPM 204
Hypervisor 116
Hypervisor Physical Memory 202
Hardware Platform 104
Machine Memory 201

FIG. 2

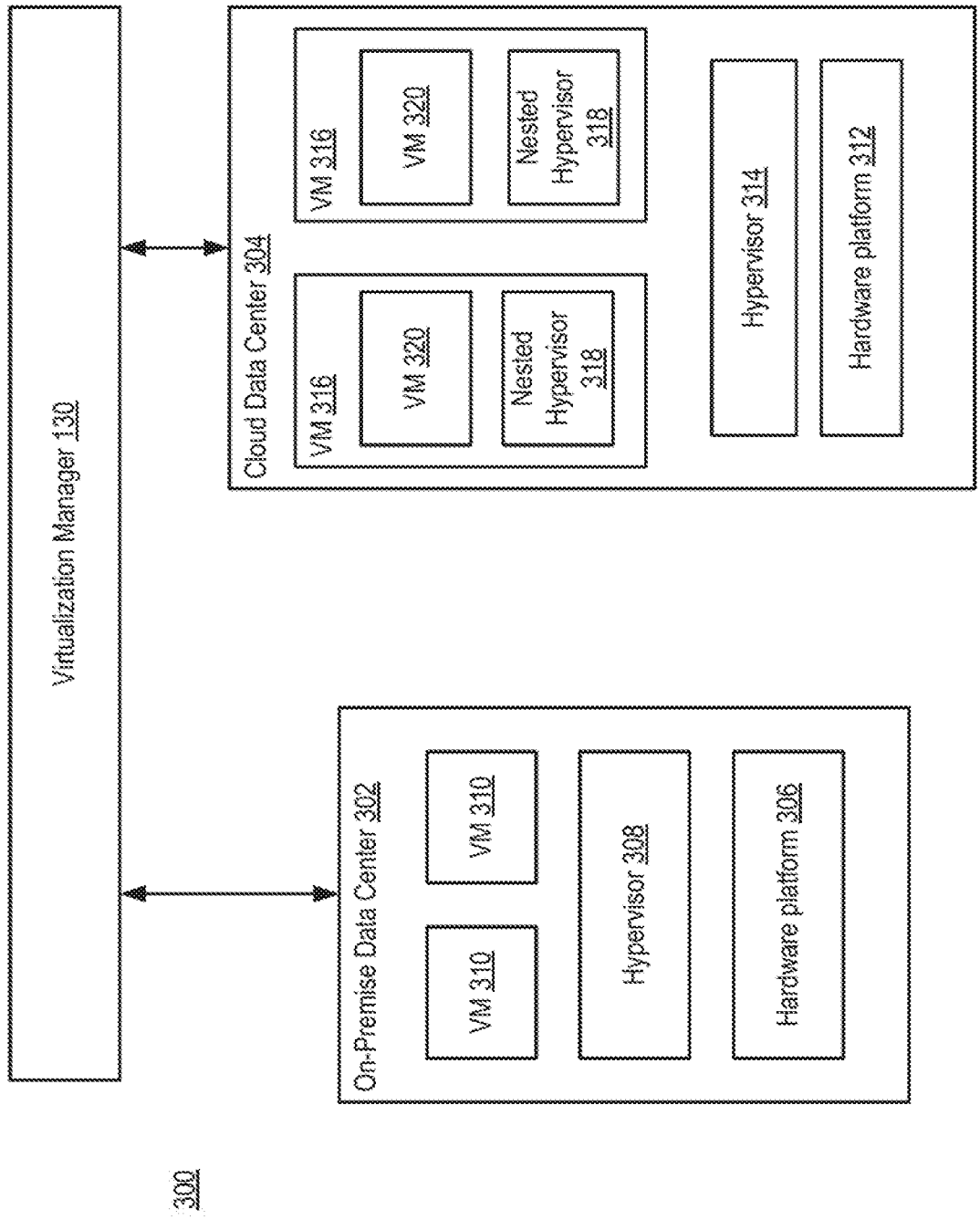
Virtualization Manager 130
Cloud Data Center 304
VM 316
VM 320
Nested Hypervisor 318
VM 316
VM 320
Nested Hypervisor 318
Hypervisor 314
Hardware platform 312
On-Premise Data Center 302
VM 310
VM 310
Hypervisor 308
Hardware platform 306
300

FIG. 3

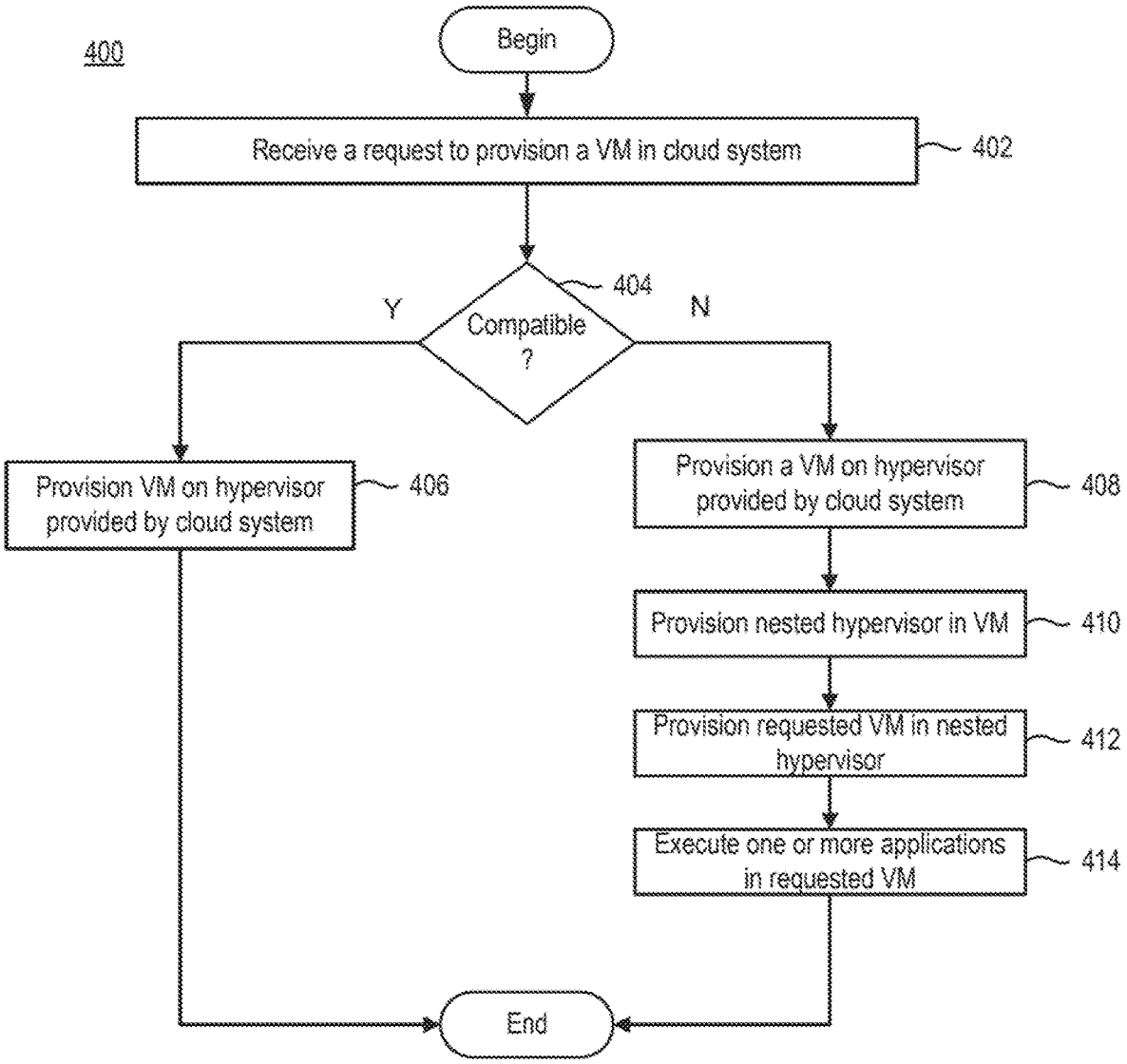
400
Begin
Receive a request to provision a VM in cloud system
402
Compatible ?
404
Y
N
Provision VM on hypervisor provided by cloud system
406
Provision a VM on hypervisor provided by cloud system
408
Provision nested hypervisor in VM
410
Provision requested VM in nested hypervisor
412
Execute one or more applications in requested VM
414
End

FIG. 4

NESTED HYPERVISOR TO RUN VIRTUAL MACHINES ON PUBLIC CLOUDS

RELATED APPLICATION

Benefit is claimed under 35 U.S.C. 119(a)-(d) to Foreign Application Serial No. 201741014809 filed in India entitled "NESTED HYPERVISOR TO RUN VIRTUAL MACHINES ON PUBLIC CLOUDS", on Apr. 26, 2017, by VMware, Inc., which is herein incorporated in its entirety by reference for all purposes.

BACKGROUND

Cloud architectures are used in cloud computing and cloud storage systems for offering infrastructure-as-a-service (IaaS) cloud services. Examples of cloud architectures include the VMware vCloud Director® cloud architecture software, Amazon EC2™ web service, and OpenStack™ open source cloud computing service. IaaS cloud service is a type of cloud service that provides access to physical and/or virtual resources in a cloud environment. These services provide a tenant application programming interface (API) that supports operations for manipulating IaaS constructs, such as virtual machines (VMs) and logical networks.

A hybrid cloud system aggregates the resource capability from both private and public clouds. A private cloud can include one or more customer data centers (referred to herein as "private data centers"). The public cloud can include a multi-tenant cloud architecture providing IaaS cloud services.

As hybrid cloud systems play an increasingly more prominent role in digital transformation, customers want the ability to run their virtual machines associated with the cloud provider on both private and public clouds, while being agnostic of the underlying hardware or hypervisor. Customers want the ability to be able to seamlessly migrate VMs between public and private cloud.

SUMMARY

One or more embodiments provide techniques for provisioning a virtual machine in a cloud environment. In an embodiment, a method of provisioning a virtual machine in a cloud system includes: receiving a request to provision the virtual machine in the cloud system; provisioning a first virtual machine managed by a hypervisor executing on a host computer in the cloud system, the hypervisor allocating resources to the first virtual machine; provisioning a nested hypervisor in the first virtual machine; and provisioning the virtual machine to execute on the nested hypervisor without re-virtualizing the resources allocated by the hypervisor to the nested hypervisor.

Further embodiments include a non-transitory computer-readable storage medium comprising instructions that cause a computer system to carry out the above method, as well as a computer system configured to carry out the above method.

BRIEF DESCRIPTION OF THE DRAWINGS

FIG. **1** is a block diagram of a virtualized computing system **100**, according to one embodiment disclosed herein.

FIG. **2** is a logical diagram of the virtual computing system **100** of FIG. **1**, according to one embodiment.

FIG. **3** is a logical diagram of a hybrid cloud system using the virtual computing system of claim **1** as an on-premise data center and as a cloud data center, according to one embodiment.

FIG. **4** is a flowchart illustrating a method of provisioning a virtual machine on a cloud environment, according to one embodiment disclosed herein.

To facilitate understanding, identical reference numerals have been used, where possible, to designate identical elements that are common to the figures. It is contemplated that elements disclosed in one embodiment may be beneficially utilized on other embodiments without specific recitation.

DETAILED DESCRIPTION

FIG. **1** is a block diagram of a virtualized computing system **100**, in which one or more embodiments of the present disclosure may be practiced. Virtualized computing system **100** may include one or more host computer systems **102**. Host computer system **102** may be disposed in, for example, a private data center or a cloud data center. A private data center may be a data center controlled and administrated by a particular enterprise or business organization, while a cloud data center may be operated by a cloud computing service provider and exposed as a service available to account holders, such as the particular enterprise in addition to other enterprises. As such, a private data center may sometimes be referred to as a "private" cloud, and a cloud data center may be referred to as a "public" cloud.

As used herein, an internal cloud or "private" cloud is a cloud in which a tenant and a cloud service provider are part of the same organization, while an external or "public" cloud is a cloud that is provided by an organization that is separate from a tenant that accesses the external cloud. For example, the tenant may be part of an enterprise, and the external cloud may be part of a cloud service provider that is separate from the enterprise of the tenant and that provides cloud services to different enterprises and/or individuals. In embodiments disclosed herein, a hybrid cloud is a cloud architecture in which a tenant is provided with seamless access to both private cloud resources and public cloud resources.

Host computer system **102** may be constructed on a server grade hardware platform **104**, such as an x86 architecture platform. As shown, hardware platform **104** may include conventional components of a computing device, such as one or more processors (CPUs) **106**, system memory (memory) **108**, a network interface (NIC) **112**, storage system (storage) **114**, and other I/O devices such as, for example, a mouse and keyboard (not shown). CPU **106** is configured to execute instructions, for example, executable instructions that perform one or more operations described herein and may be stored in memory **108** and in local storage. Memory **108** is a device allowing information, such as executable instructions, cryptographic keys, virtual disks, configurations, and other data, to be stored and retrieved. Memory **108** may include, for example, one or more random access memory (RAM) modules. Network interface **112** enables the host computer system **102** to communicate with another device via a communication medium, such as a network within virtualized computing system **100**. Network interface **112** may be one or more network adapters, also referred to as a Network Interface Card (NIC). Storage system **114** represents local storage devices (e.g., one or more hard disks, flash memory modules, solid state disks, and optical disks) and/or a storage interface that enables host

computer system **102** to communicate with one or more network data storage systems. Examples of a storage interface are a host bus adapter (HBA) that couples host computer system **102** to one or more storage arrays, such as a storage area network (SAN) or a network-attached storage (NAS), as well as other network data storage systems.

Host computer system **102** is configured to provide a virtualization layer that abstracts processor, memory, storage, and networking resources of hardware platform **104** into multiple virtual machines **120** (collectively referred to as VMs **120**) that run concurrently on host computer system **102**. VMs **120** run on top of a software interface layer, referred to herein as a hypervisor **116**, that enables sharing of the hardware resources of host computer system **102** by VMs **120**. One example of hypervisor **116** that may be used in an embodiment described herein is a VMware ESXi™ hypervisor provided as part of the VMware vSphere® solution made commercially available from VMware, Inc. of Palo Alto, Calif. Hypervisor **116** executes directly on hardware components of host computer system **102** (although it should be recognized that any other virtualization technologies, including Xen®, Microsoft Hyper-V®, KVM, the like, may be utilized consistent with the teachings herein).

Virtualized computing system **100** includes a virtualization management component (depicted in FIG. **1** as a virtualization manager **130**) that may communicate with host computer system **102** via a network **125**, sometimes referred to as a management network **125**. In one embodiment, virtualization manager **130** is a computer program that resides and executes in a central server, which may reside in virtualized computing system **100**, or alternatively, run as a VM in host computer system **102**. One example of a virtualization manager is the vCenter Server™ product made available from VMware, Inc. Virtualization manager **130** is configured to carry out administrative tasks for virtualized computing system **100**, including managing host computer system **102**, managing VMs **120** running within host computer system **102**, provisioning VMs, migrating VMs from host computer system **102** to another host, and load balancing between one or more host computer systems **102**.

Hypervisor **116** includes a kernel **142** and virtual machine managers (VMMs) **118**. For each VM **120**, hypervisor **116** includes a VMM **118** that manages a corresponding virtual hardware platform **122**. A virtual hardware platform **122** includes emulated hardware, such as a virtualized CPU **124** (vCPU), a virtualized memory **127** (vMem), a virtualized NIC **128** (vNIC), and one or more virtualized storage devices **131** (vStor.). For example, virtual hardware platform **122** may function as an equivalent of an x86 hardware platform. In general, virtualized CPU **124** can include one or more processors that are backed by processors of CPU **106**. Virtualized memory **127** includes a logical memory, which is referred to herein as hypervisor physical memory, backed by memory **108**, which is referred to herein as machine memory. Hypervisor physical memory includes a flat logical address space divided into hypervisor physical pages (HPPs) that are mapped to machine pages (MPs) in the address space of memory **108**. Kernel **142** and/or VMM **118** maintain page tables or other data structures that map HPPs to MPs. For example, for x86 hardware, kernel **142** and/or VMM **118** can maintain nested page tables (NPTs) that map HPPs to MPs. Hypervisor **116** exposes the NPTs to CPU **106**.

Any of the VMs **120** may execute a nested hypervisor **126**. Nested hypervisor **126** functions similarly to hypervisor **116**, but provides a reduced virtualization footprint. For example, just as hypervisor **116** runs on top of hardware platform **104** to execute VMs **120**, nested hypervisor **126** runs on top of virtual hardware platform **122**. One difference, however, is that nested hypervisor **126** is configured to execute only a single VM **140** (e.g., some functionality configured to manage multiple VMs is removed or disabled in nested hypervisor **126**). Nested hypervisor **126** includes a kernel (referred to as a kernel **144**), a VMM **117**, and one or more user applications that provide, among other functions, an application programming interface (API) **146** for nested hypervisor **126**. VMM **117** dedicates a portion of virtual hardware platform **122** to VM **140** (while reserving a portion for use by kernel **144**). VM **140** may execute a guest operating system **121**, as well as one or more applications (not shown) on top of guest operating system **121**. In an embodiment, nested hypervisor **126** and hypervisor **116** are heterogeneous. For example, nested hypervisor **126** can be a micro-version of ESXi and hypervisor **116** can be a full version of ESXi, a version of KVM, or the like.

The kernel **144** and VMM **117** do not re-virtualize the virtualized hardware (i.e., resources) provided by hypervisor **116**. In an embodiment, nested hypervisor **126** dedicates one or more processors of virtualized CPU **124** for the sole use by VM **140** (nested hypervisor **126** "pins" processor(s) of virtualized CPU **124** to VM **140**). In this manner, kernel **144** does not enable or include a scheduler for virtualizing CPU resources among multiple VMs. In an embodiment, nested hypervisor **126** dedicates a portion of virtualized memory **127** to VM **140**. Nested hypervisor **126** provides a logical memory to VM **140**, referred to herein as guest physical memory, which is directly mapped to the hypervisor physical memory of virtualized memory **127**. Kernel **144** and/or VMM **117** maintains page tables or other data structures that pin guest physical pages (GPPs) to HPPs (e.g., guest physical page numbers=hypervisor physical page numbers). In this manner, kernel **144** does not enable or include a scheduler for virtualizing memory resources among multiple VMs. In an embodiment, nested hypervisor **126** dedicates one or more input/output (IO) devices (e.g., NICs, storage devices, etc.) for the sole use by VM **140**. VM **140** accesses such devices directly without intervention by nested hypervisor **126** using, for example, direct memory access (DMA). In this manner, kernel **144** does not enable or include a scheduler for virtualizing **10** devices. By removing or disabling schedulers of processor, memory, and/or device resources, kernel **144** provides a reduced virtualization footprint as compared to a full version of a hypervisor (e.g., hypervisor **116**). This allows for increased performance of nested hypervisor **126** than would be possible if nested hypervisor **126** were a full-featured hypervisor.

FIG. **2** is a logical diagram of virtualized computing system **100** of FIG. **1**, according to one embodiment. Elements in FIG. **2** that are the same or similar to those of FIG. **1** are designated with identical reference numerals. FIG. **2** illustrates hardware platform **104**, hypervisor **116**, and VM **120** in a stacked configuration. As shown, VM **120** executes nested hypervisor **126**. Nested hypervisor **126** is optimized to run only a single VM **140**, as discussed above.

As discussed above, hypervisor **116** virtualizes machine memory **201** in hardware platform **104** to provide hypervisor physical memory **202**. Hypervisor **116** allocates some hypervisor physical memory **202** to each VM **120**. Nested hypervisor **126** presents guest physical memory (GPM) **204** to VM **140**. Guest physical memory **204** is backed by host physical memory **202**. Nested hypervisor **126** reserves some host physical memory **202** for itself, and pins the remaining host physical memory **202** to VM **140** as guest physical

memory **204**. That is, nested hypervisor **126** does not virtualize host physical memory **202** for VM **140**. A guest operating system of VM **140** virtualizes guest physical memory **204** to provide guest virtual memory (GVM) **206**. The guest operating system of VM **140** exposes page tables to CPU **106** that map guest virtual memory to guest physical memory (which has a one-to-one correspondence with host physical memory **202** allocated to nested hypervisor **126**).

In some techniques, when nested hypervisors are executed within a VM, the nested hypervisor re-virtualize the memory resources allocated thereto, thus creating an additional memory virtualization layer. In embodiments described herein, nested hypervisor **126** does not re-virtualize the memory resources allocated by hypervisor **116**.

In the present application, nested hypervisor **126** is configured to provision only a single VM **140**. Because nested hypervisor **126** provisions only a single VM **140**, the resources allocated to VM **120** in which nested hypervisor **126** is executing are not re-virtualized when allocated to VM **140**. As such, host physical memory **202** is effectively pushed from hypervisor **116** to VM **140**. Further, the operating system overhead of nested hypervisor **126** having to schedule resources (e.g., CPU, memory, I/O) is eliminated. As such, when nested hypervisor **126** is executing in VM **120**, one or more vCPUs **124** and one or more IO devices (e.g., vNIC **128**) are pinned to VM **140**.

Generally, as illustrated in FIG. **2**, there is a one-to-one correspondence between a number of VMs **140** desired and a number of nested hypervisors **126**. For each VM **140**, there is a corresponding VM **120** executing a nested hypervisor **126** therein. For example, as illustrated, virtualized computing system **100** includes one VM **140** per VM **120**. The effect is that resource scheduling performed by hypervisor **116** passes through to VMs **140**. This allows a user access to an API of the nested hypervisor **126** for managing VM **140**, without incurring a decrease in performance due to the nesting of hypervisors.

FIG. **3** is a logical diagram of a hybrid cloud system **300** using instances of virtualized computing system **100** as an on-premise data center **302** and as a cloud data center **304**, according to one embodiment. On-premise data center **302** includes hardware platform **306** (similar to hardware platform **104**), hypervisor **308**, and one or more VMs **310** managed by hypervisor **308**. In this example, the hypervisor **308** from on-premise data center is of a first type. For example, hypervisor **308** may be a full-version of ESXi. The customer manages VMs **310** through an API of hypervisor **308** (e.g., using virtualization manager **130**).

Cloud data center **304** is accessed by a customer. Cloud data center **304** includes hardware platform **312** (similar to hardware platform **104**), hypervisor **314**, and one or more VMs **316** managed by hypervisor **314**. Hypervisor **314** can be different from hypervisor **308**. For example, hypervisor **314** can be a KVM-based hypervisor. In some cases, the customer may not even know the brand or type of hypervisor **314**. In this example, the customer desires to run one or more VMs in cloud data center **304**, while still utilizing an API of ESXi to manage the VMs. As such, to carry out the request, a nested hypervisor **318** is provisioned in each VM **316**. Nested hypervisor **318** is of a type associated desired by the customer (e.g., ESXi). However, as noted above, nested hypervisor **318** is a reduced-functionality version of the desired type of hypervisor (e.g., ESXi with a MicroESXi kernel. Once the nested hypervisor **318** is provisioned and executing in VM **316**, hypervisor **318** provisions a single VM **320**, in accordance with workload request. If the workload request requires more than one VM **320**, then hypervisor **314** would run more than one VM **316**, with each VM **316** having nested hypervisor **318** executing therein, and each hypervisor **318** provisioning a single VM **320**. The customer can then manage VMs **320** using the desired API despite cloud data center **304** using a hypervisor **314** of a different or unknown type. Further, nested hypervisor **318** does not exhibit decreased performance traditionally associated with nesting of hypervisors, as discussed above.

FIG. **4** is a flowchart illustrating a method **400** of provisioning a virtual machine on a cloud system, according to one embodiment disclosed herein. At step **402**, virtualization manager **130** receives a request to provision a VM in the cloud system. For example, the request may include instructions to provision a VM to run an application thereon.

At step **404**, virtualization manager **130** determines if the cloud provider employs a compatible hypervisor for the requested VM. For example, the requested VM may be for an ESXi hypervisor, and the cloud system may also employ ESXi hypervisors or the cloud system may employ different or unknown hypervisors. If virtualization manager **130** determines that the cloud system includes a hypervisor compatible with the requested VM, then at step **406**, virtualization manager **130** provisions the VM on the hypervisor provided by the cloud system.

If, however, virtualization manager **130** determines that the cloud system provides an incompatible hypervisor, at step **408**, virtualization manager **130** requests provisioning of a VM on a hypervisor provided by the cloud system. For example, referring to FIGS. **1-2**, cloud system can use a hypervisor **116** to provisions a VM **120**.

At step **410**, in the VM provisioned by the cloud system, virtualization manager **130** provisions a nested hypervisor. The nested hypervisor is compatible with the requested VM and can be a reduced-functionality version of the compatible hypervisor, as discussed above. For example, referring to FIGS. **1-2**, virtualization manager **130** provisions nested hypervisor **126** in a VM **120**.

At step **412**, virtualization manager **130** provisions the requested VM in the nested hypervisor. The nested hypervisor does not re-virtualize the resources allocated by the outer hypervisor, as discussed above. For example, nested hypervisor **126** provisions a single VM **140** without re-virtualizing components of virtual hardware platform **122**. Virtualization manager **130** can now execute and manage the VM using the expected and known API of the nested hypervisor. Optionally, at step **414**, virtualization manager **130** may execute one or more applications on the requested VM.

Accordingly, because both on-premise and cloud environments provision VMs **140** of the same type, a user can seamlessly migrate the VMs **140** to each environment without any need to reconfigure the VMs **140** to be compatible with the underlying hypervisor of each environment.

The various embodiments described herein may employ various computer-implemented operations involving data stored in computer systems. For example, these operations may require physical manipulation of physical quantities—usually, though not necessarily, these quantities may take the form of electrical or magnetic signals, where they or representations of them are capable of being stored, transferred, combined, compared, or otherwise manipulated. Further, such manipulations are often referred to in terms, such as producing, identifying, determining, or comparing. Any operations described herein that form part of one or more embodiments of the invention may be useful machine operations. In addition, one or more embodiments of the invention also relate to a device or an apparatus for performing these

operations. The apparatus may be specially constructed for specific required purposes, or it may be a general purpose computer selectively activated or configured by a computer program stored in the computer. In particular, various general purpose machines may be used with computer programs written in accordance with the teachings herein, or it may be more convenient to construct a more specialized apparatus to perform the required operations.

The various embodiments described herein may be practiced with other computer system configurations including band-held devices, microprocessor systems, microprocessor-based or programmable consumer electronics, minicomputers, mainframe computers, and the like.

One or more embodiments of the present invention may be implemented as one or more computer programs or as one or more computer program modules embodied in one or more computer readable media. The term computer readable medium refers to any data storage device that can store data which can thereafter be input to a computer system—computer readable media may be based on any existing or subsequently developed technology for embodying computer programs in a manner that enables them to be read by a computer. Examples of a computer readable medium include a hard drive, network attached storage (NAS), read-only memory, random-access memory (e.g., a flash memory device), a CD (Compact Discs)—CD-ROM, a CD-R, or a CD-RW, a DVD (Digital Versatile Disc), a magnetic tape, and other optical and non-optical data storage devices. The computer readable medium can also be distributed over a network coupled computer system so that the computer readable code is stored and executed in a distributed fashion.

Although one or more embodiments of the present invention have been described in some detail for clarity of understanding, it will be apparent that certain changes and modifications may be made within the scope of the claims. Accordingly, the described embodiments are to be considered as illustrative and not restrictive, and the scope of the claims is not to be limited to details given herein, but may be modified within the scope and equivalents of the claims. In the claims, elements and/or steps do not imply any particular order of operation, unless explicitly stated in the claims.

Virtualization systems in accordance with the various embodiments may be implemented as hosted embodiments, non-hosted embodiments or as embodiments that tend to blur distinctions between the two, are all envisioned. Furthermore, various virtualization operations may be wholly or partially implemented in hardware. For example, a hardware implementation may employ a look-up table for modification of storage access requests to secure non-disk data.

Certain embodiments as described above involve a hardware abstraction layer on top of a host computer. The hardware abstraction layer allows multiple contexts to share the hardware resource. In one embodiment, these contexts are isolated from each other, each having at least a user application running therein. The hardware abstraction layer thus provides benefits of resource isolation and allocation among the contexts. In the foregoing embodiments, virtual machines are used as an example for the contexts and hypervisors as an example for the hardware abstraction layer. As described above, each virtual machine includes a guest operating system in which at least one application runs. It should be noted that these embodiments may also apply to other examples of contexts, such as containers not including a guest operating system, referred to herein as "OS-less containers" (see, e.g., www.docker.com). OS-less containers implement operating system-level virtualization, wherein an abstraction layer is provided on top of the kernel of an operating system on a host computer. The abstraction layer supports multiple OS-less containers each including an application and its dependencies. Each OS-less container runs as an isolated process in userspace on the host operating system and shares the kernel with other containers. The OS-less container relies on the kernel's functionality to make use of resource isolation (CPU, memory, block I/O, network, etc.) and separate namespaces and to completely isolate the application's view of the operating environments. By using OS-less containers, resources can be isolated, services restricted, and processes provisioned to have a private view of the operating system with their own process ID space, file system structure, and network interfaces. Multiple containers can share the same kernel, but each container can be constrained to only use a defined amount of resources such as CPU, memory and I/O. The term "virtualized computing instance" as used herein is meant to encompass both VMs and OS-less containers.

Many variations, modifications, additions, and improvements are possible, regardless the degree of virtualization. The virtualization software can therefore include components of a host, console, or guest operating system that performs virtualization functions. Plural instances may be provided for components, operations or structures described herein as a single instance. Boundaries between various components, operations and data stores are somewhat arbitrary, and particular operations are illustrated in the context of specific illustrative configurations. Other allocations of functionality are envisioned and may fall within the scope of the invention(s). In general, structures and functionality presented as separate components in exemplary configurations may be implemented as a combined structure or component. Similarly, structures and functionality presented as a single component may be implemented as separate components. These and other variations, modifications, additions, and improvements may fall within the scope of the appended claim(s).

What is claimed is:

1. A method of provisioning a virtual machine in a cloud system, comprising:

receiving a request to provision the virtual machine in the cloud system;

provisioning a first virtual machine managed by a hypervisor executing on a host computer in the cloud system, the hypervisor allocating resources to the first virtual machine, the resources including a plurality of processors;

provisioning a nested hypervisor in the first virtual machine; and

provisioning the virtual machine to execute on the nested hypervisor without re-virtualizing the resources allocated by the hypervisor to the nested hypervisor, wherein the nested hypervisor dedicates at least one of the plurality of processors to the virtual machine.

2. The method of claim **1**, wherein the virtual machine is an only virtual machine executing on the nested hypervisor.

3. The method of claim **1**, wherein the resources allocated by the hypervisor to the first virtual machine include memory pages, and wherein the nested hypervisor dedicates the memory pages to the virtual machine.

4. The method of claim **1**, wherein the resources allocated by the hypervisor to the first virtual machine include input/output (TO) devices, and wherein the nested hypervisor dedicates the IO devices to the virtual machine.

5. The method of claim 1, wherein the nested hypervisor does not enable or include a scheduling function to schedule the resources among multiple virtual machines.

6. The method of claim 1, wherein the hypervisor and the nested hypervisor include different management application programming interfaces (APIs).

7. The method of claim 1, wherein the cloud system is a public portion of a hybrid cloud system, and wherein the request is received from a data center of a private portion of the hybrid cloud system.

8. A non-transitory computer readable medium having instructions stored thereon that when executed by a processor cause the processor to perform a method of provisioning a virtual machine in a cloud system, comprising:

receiving a request to provision the virtual machine in the cloud system;

provisioning a first virtual machine managed by a hypervisor executing on a host computer in the cloud system, the hypervisor allocating resources to the first virtual machine, the resources including a plurality of processors;

provisioning a nested hypervisor in the first virtual machine; and

provisioning the virtual machine to execute on the nested hypervisor without re-virtualizing the resources allocated by the hypervisor to the nested hypervisor, wherein the nested hypervisor dedicates at least one of the plurality of processors to the virtual machine.

9. The non-transitory computer readable medium of claim 8, wherein the virtual machine is an only virtual machine executing on the nested hypervisor.

10. The non-transitory computer readable medium of claim 8, wherein the resources allocated by the hypervisor to the first virtual machine include memory pages, and wherein the nested hypervisor dedicates the memory pages to the virtual machine.

11. The non-transitory computer readable medium of claim 8, wherein the resources allocated by the hypervisor to the first virtual machine include input/output (TO) devices, and wherein the nested hypervisor dedicates the IO devices to the virtual machine.

12. The non-transitory computer readable medium of claim 8, wherein the nested hypervisor does not enable or include a scheduling function to schedule the resources among multiple virtual machines.

13. The non-transitory computer readable medium of claim 8, wherein the hypervisor and the nested hypervisor include different management application programming interfaces (APIs).

14. The non-transitory computer readable medium of claim 8, wherein the cloud system is a public portion of a hybrid cloud system, and wherein the request is received from a data center of a private portion of the hybrid cloud system.

15. A computer system, comprising:

a hardware platform having a central processing unit (CPU) and memory; and

a software platform having code stored in the memory that is executable by the CPU to:

receive a request to provision a virtual machine in a cloud system;

provision a first virtual machine managed by a hypervisor executing on a host computer in the cloud system, the hypervisor allocating resources to the first virtual machine, the resources including a plurality of processors;

provision a nested hypervisor in the first virtual machine; and

provision the virtual machine to execute on the nested hypervisor without re-virtualizing the resources allocated by the hypervisor to the nested hypervisor, wherein the nested hypervisor dedicates at least one of the plurality of processors to the virtual machine.

16. The computer system of claim 15, wherein the virtual machine is an only virtual machine executing on the nested hypervisor.

17. The computer system of claim 15, wherein the resources allocated by the hypervisor to the first virtual machine include memory pages, and wherein the nested hypervisor dedicates the memory pages to the virtual machine.

* * * * *