US008874749B1

(12) **United States Patent**
Vittal et al.

(10) **Patent No.: US 8,874,749 B1**
(45) **Date of Patent: Oct. 28, 2014**

(54) **NETWORK FRAGMENTATION AND VIRTUAL MACHINE MIGRATION IN A SCALABLE CLOUD COMPUTING ENVIRONMENT**

(75) Inventors: **Chiradeep Vittal**, Cupertino, CA (US); **Will Chan**, Santa Clara, CA (US); **Alex Huang**, Cupertino, CA (US); **Sheng Liang**, Cupertino, CA (US)

(73) Assignee: **Citrix Systems, Inc.**, Fort Lauderdale, FL (US)

(*) Notice: Subject to any disclaimer, the term of this patent is extended or adjusted under 35 U.S.C. 154(b) by 262 days.

(21) Appl. No.: **13/020,802**

(22) Filed: **Feb. 3, 2011**

Related U.S. Application Data

(60) Provisional application No. 61/301,168, filed on Feb. 3, 2010.

(51) **Int. Cl.**
G06F 15/173 (2006.01)

(52) **U.S. Cl.**
USPC **709/226**

(58) **Field of Classification Search**
USPC 709/234, 226, 224, 223, 225
See application file for complete search history.

(56) **References Cited**

U.S. PATENT DOCUMENTS

2007/0266433	A1 *	11/2007	Moore	726/15
2009/0222558	A1	9/2009	Xu et al.	
2009/0248896	A1 *	10/2009	Cohn	709/245
2009/0276771	A1	11/2009	Nickolov et al.	
2009/0282404	A1 *	11/2009	Khandekar et al.	718/1
2009/0300605	A1 *	12/2009	Edwards et al.	718/1
2010/0260187	A1 *	10/2010	Ongole et al.	370/395.53
2011/0022812	A1 *	1/2011	van der Linden et al.	711/163

* cited by examiner

Primary Examiner — Vivek Srivastava
Assistant Examiner — Normin Abedin
(74) *Attorney, Agent, or Firm* — BainwoodHuang

(57) **ABSTRACT**

A scalable cloud infrastructure serves two or more customers, where each customer is associated with at least one unit of virtual resources. The virtual resources are established by apportioning physical resources in the cloud infrastructure that are partitioned into pods within one or more zones in a scalable manner. Additionally, the cloud infrastructure establishes one or more management server clusters each comprising one or more management servers. The two or more customers create a number of virtual machines within pods in a zone. Due to the scalability of the cloud infrastructure, customer virtual machines may exist in non optimal locations within the zone. A method to migrate virtual machines and defragment customer networks is devised to optimally manage network traffic and data communication in a scaled cloud infrastructure.

18 Claims, 16 Drawing Sheets

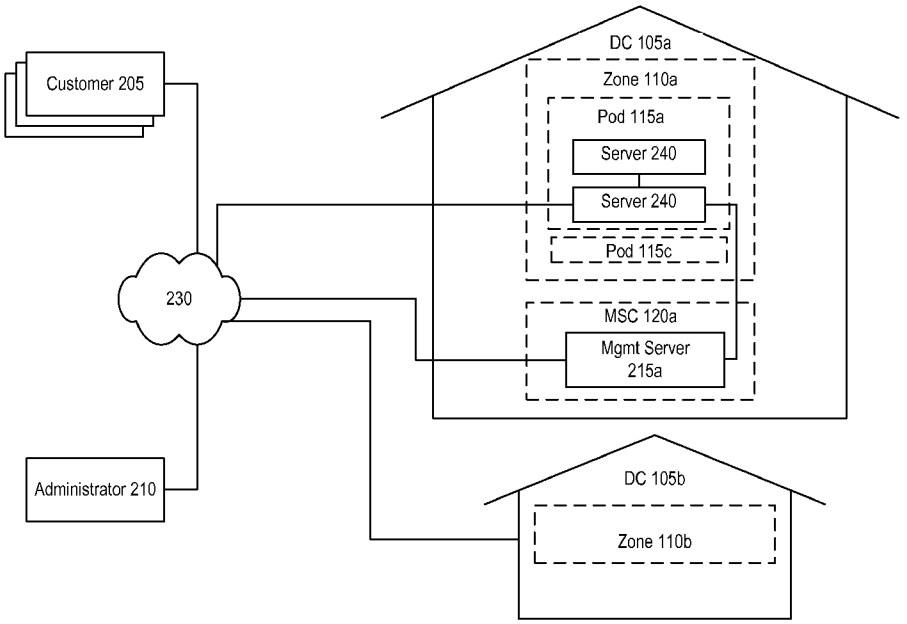

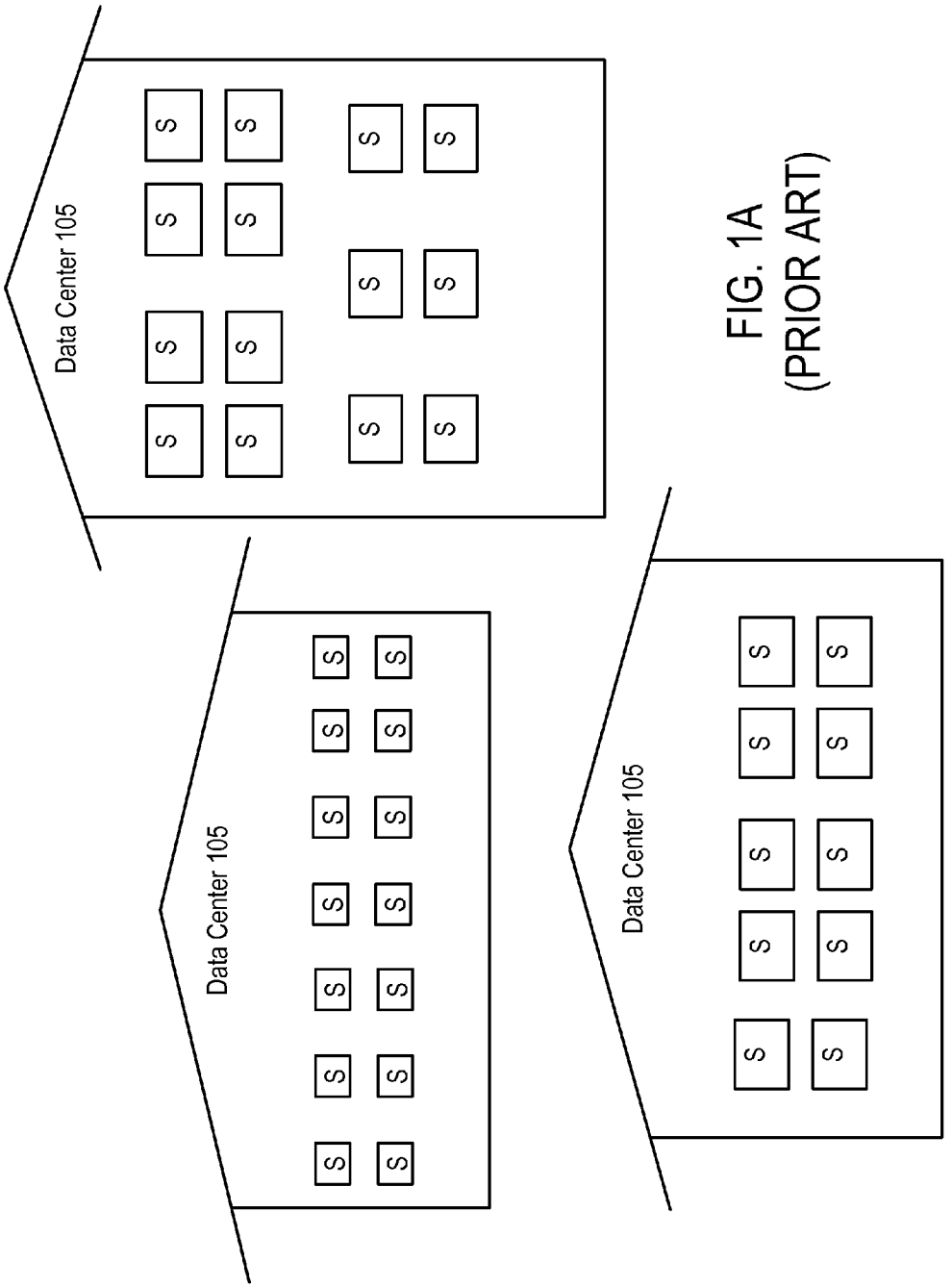

FIG. 1A
(PRIOR ART)

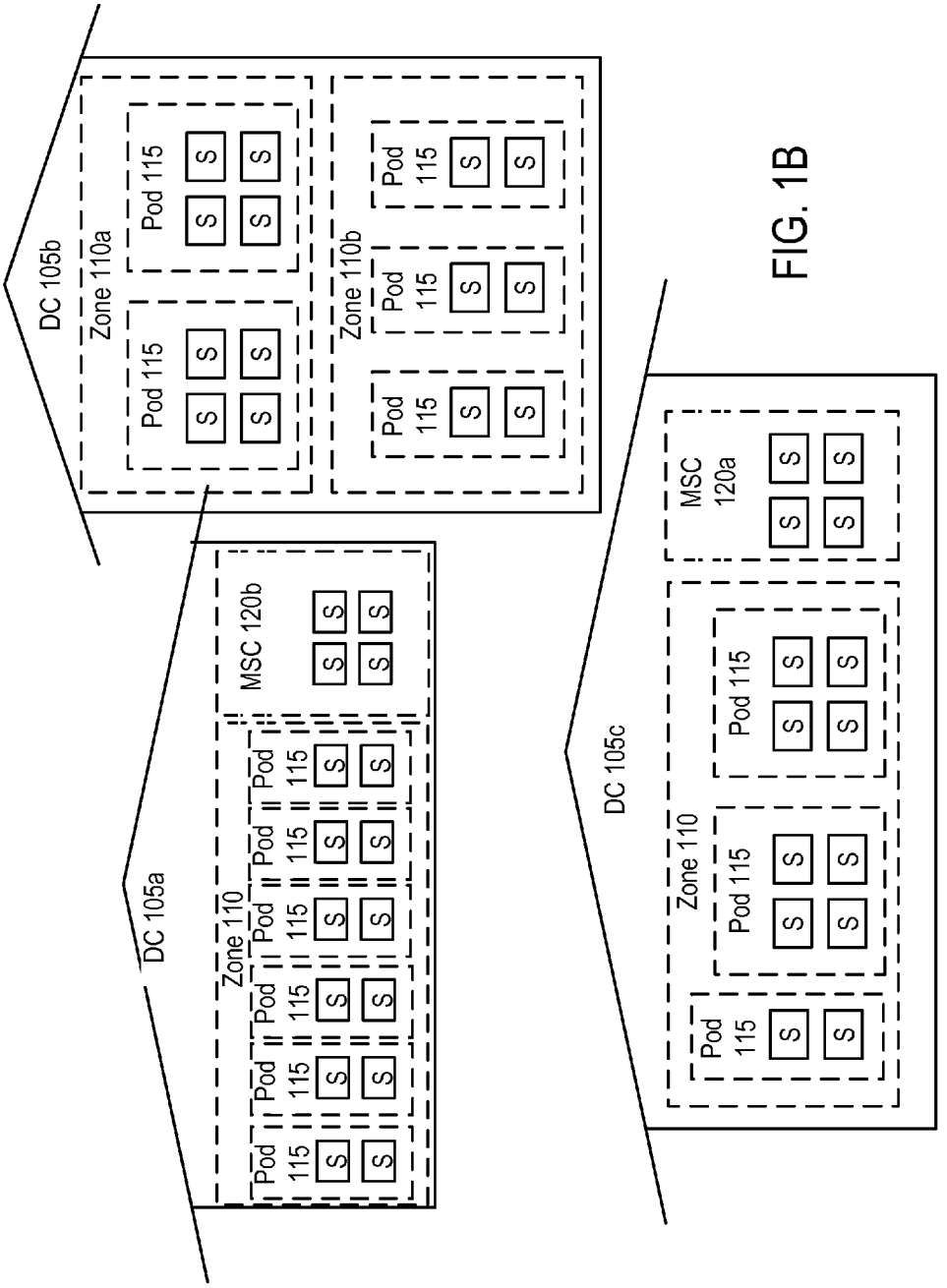
DC 105b
Zone 110a
Pod 115
S
Zone 110b
DC 105a
Zone 110
MSC 120b
DC 105c
MSC 120a

FIG. 1B

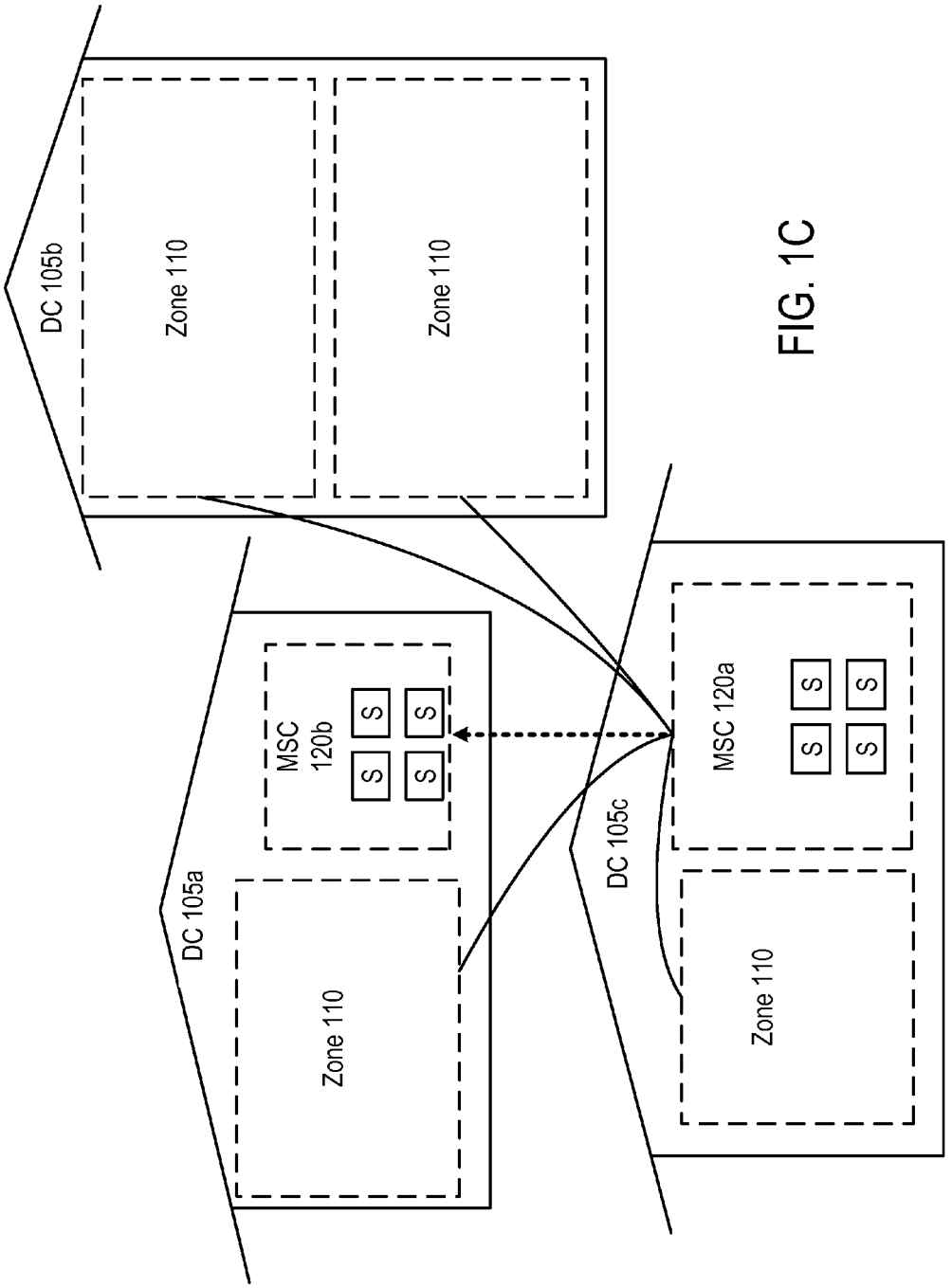
DC 105b
Zone 110
Zone 110
DC 105a
MSC 120b
S
S
S
S
Zone 110
DC 105c
MSC 120a
S
S
S
S
Zone 110

FIG. 1C

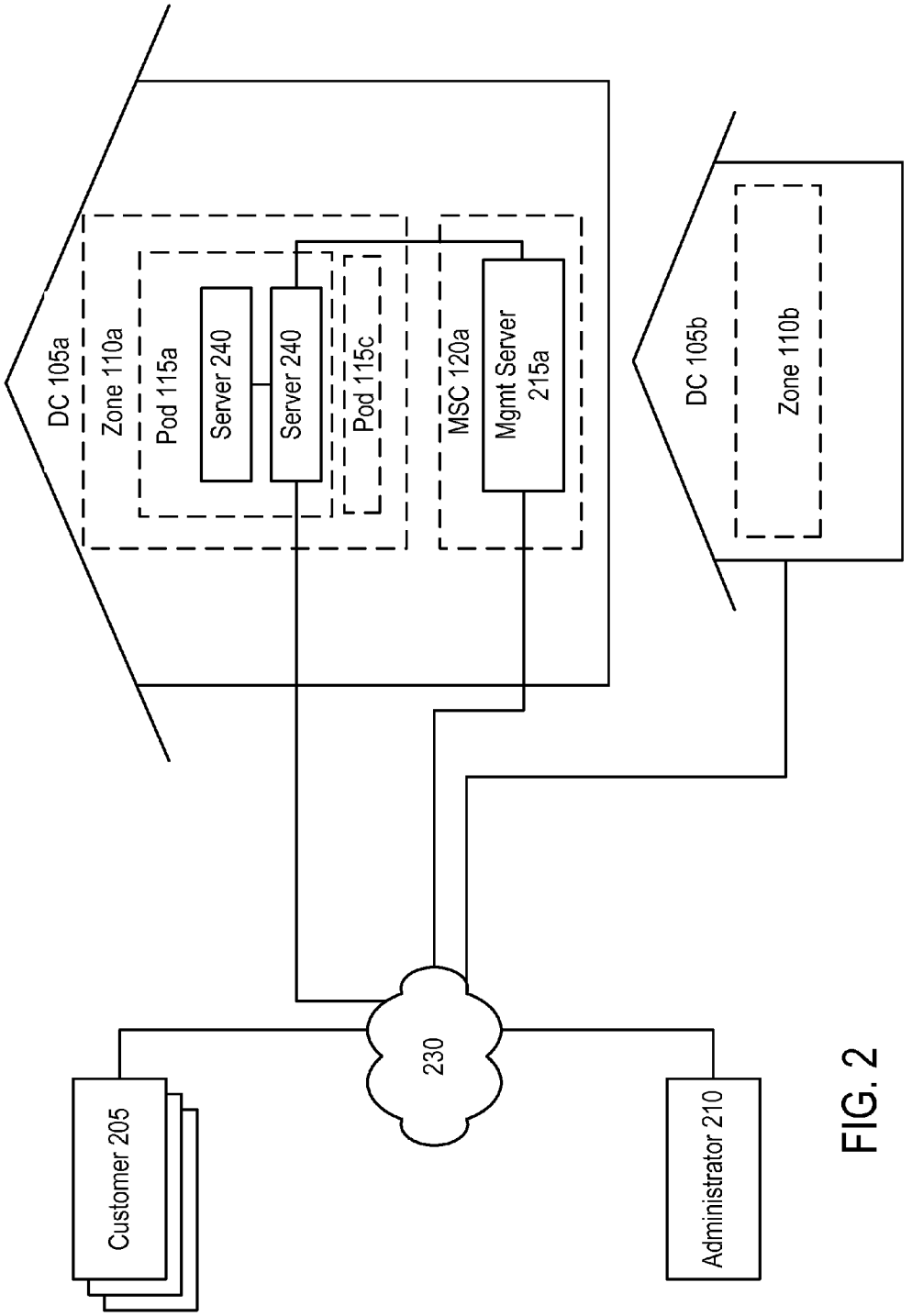
DC 105a
Zone 110a
Pod 115a
Server 240
Server 240
Pod 115c
MSC 120a
Mgmt Server 215a
DC 105b
Zone 110b
230
Customer 205
Administrator 210

FIG. 2

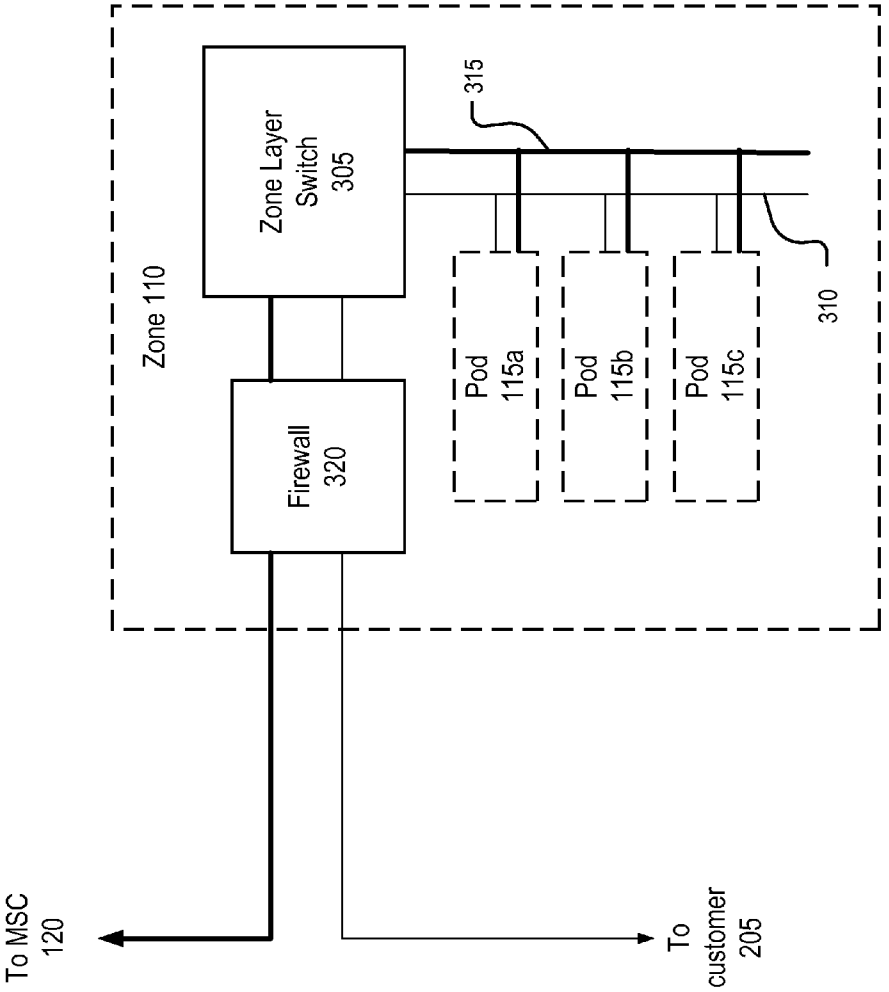
To MSC
120
Zone 110
Firewall
320
Zone Layer
Switch
305
315
310
Pod
115a
Pod
115b
Pod
115c
To
customer
205

FIG. 3

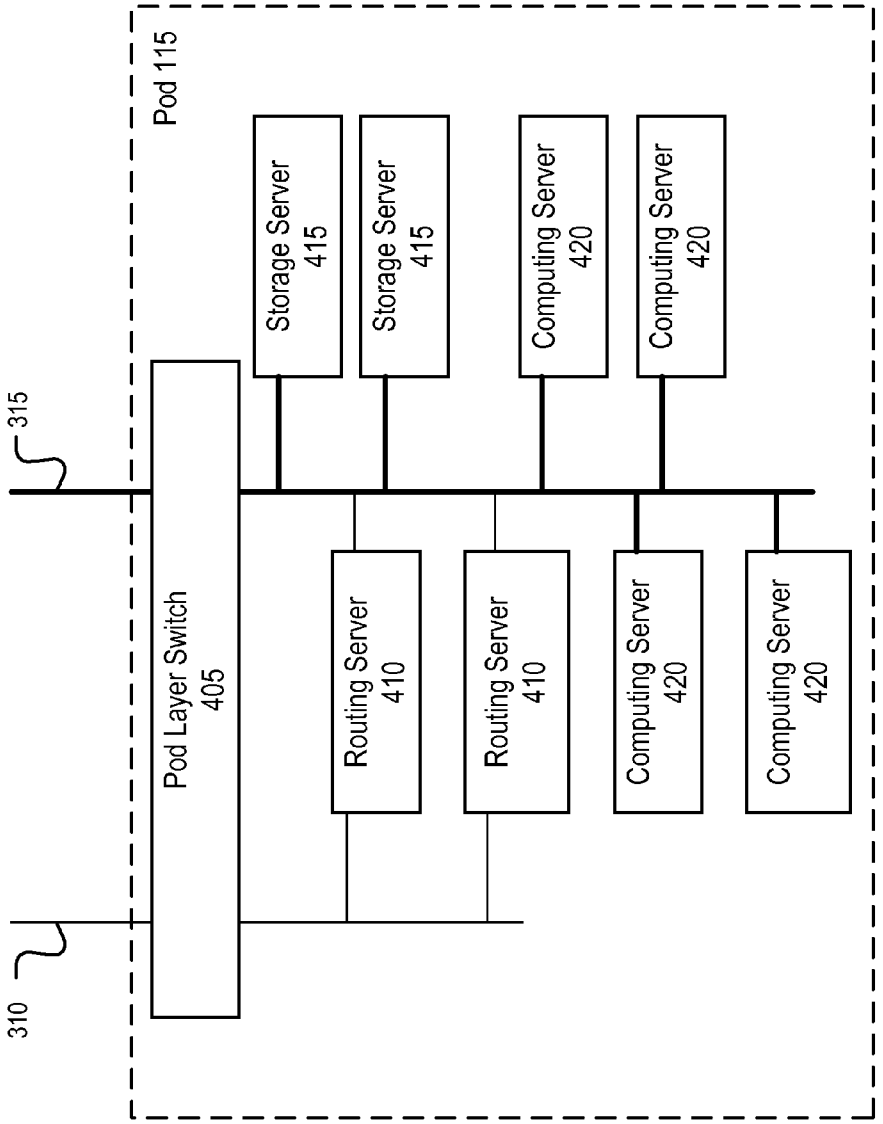
315
310
Pod 115
Pod Layer Switch
405
Storage Server
415
Storage Server
415
Computing Server
420
Computing Server
420
Routing Server
410
Routing Server
410
Computing Server
420
Computing Server
420

FIG. 4

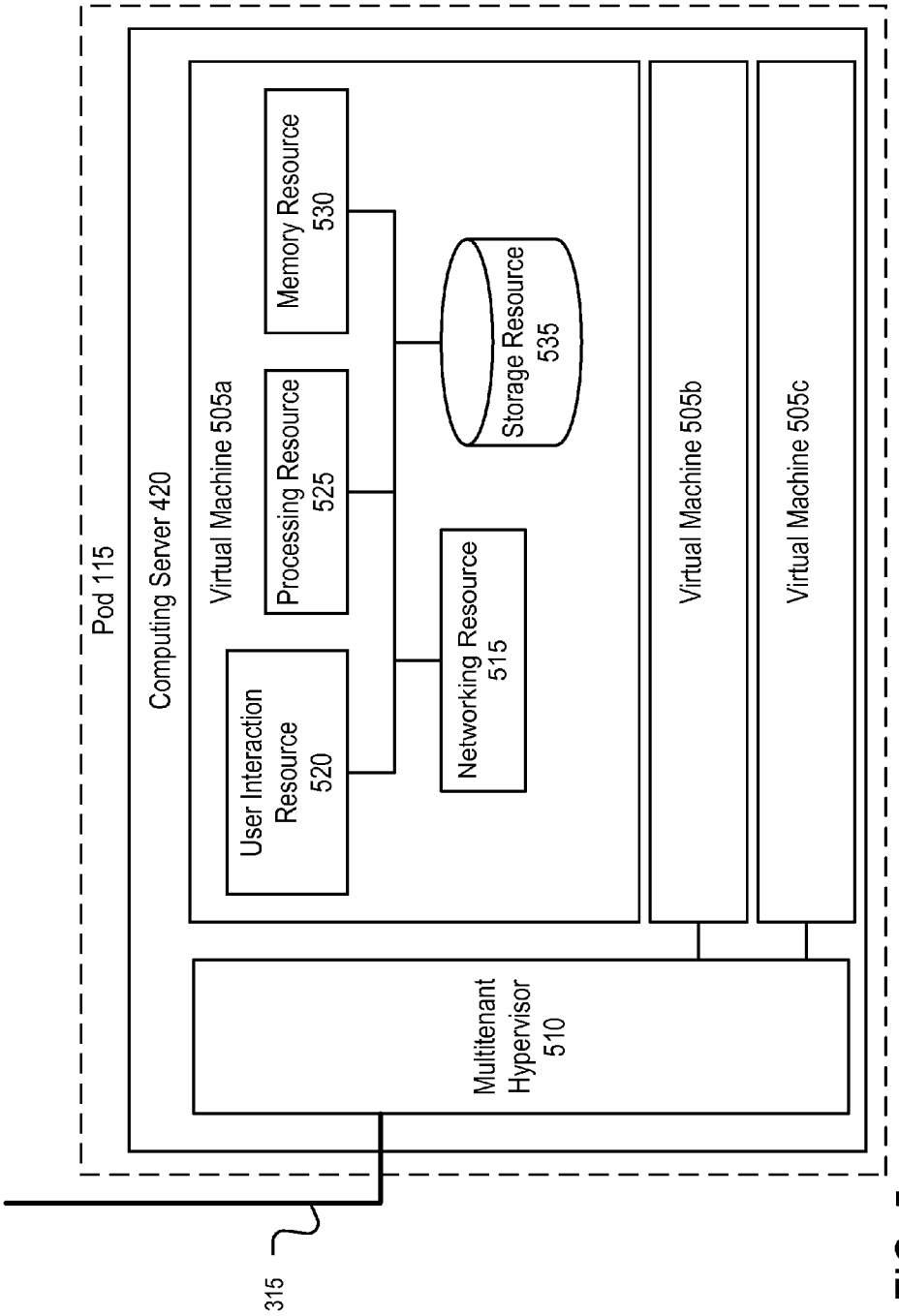
Pod 115
Computing Server 420
Virtual Machine 505a
User Interaction Resource 520
Processing Resource 525
Memory Resource 530
Networking Resource 515
Storage Resource 535
Virtual Machine 505b
Virtual Machine 505c
Multitenant Hypervisor 510
315

FIG. 5

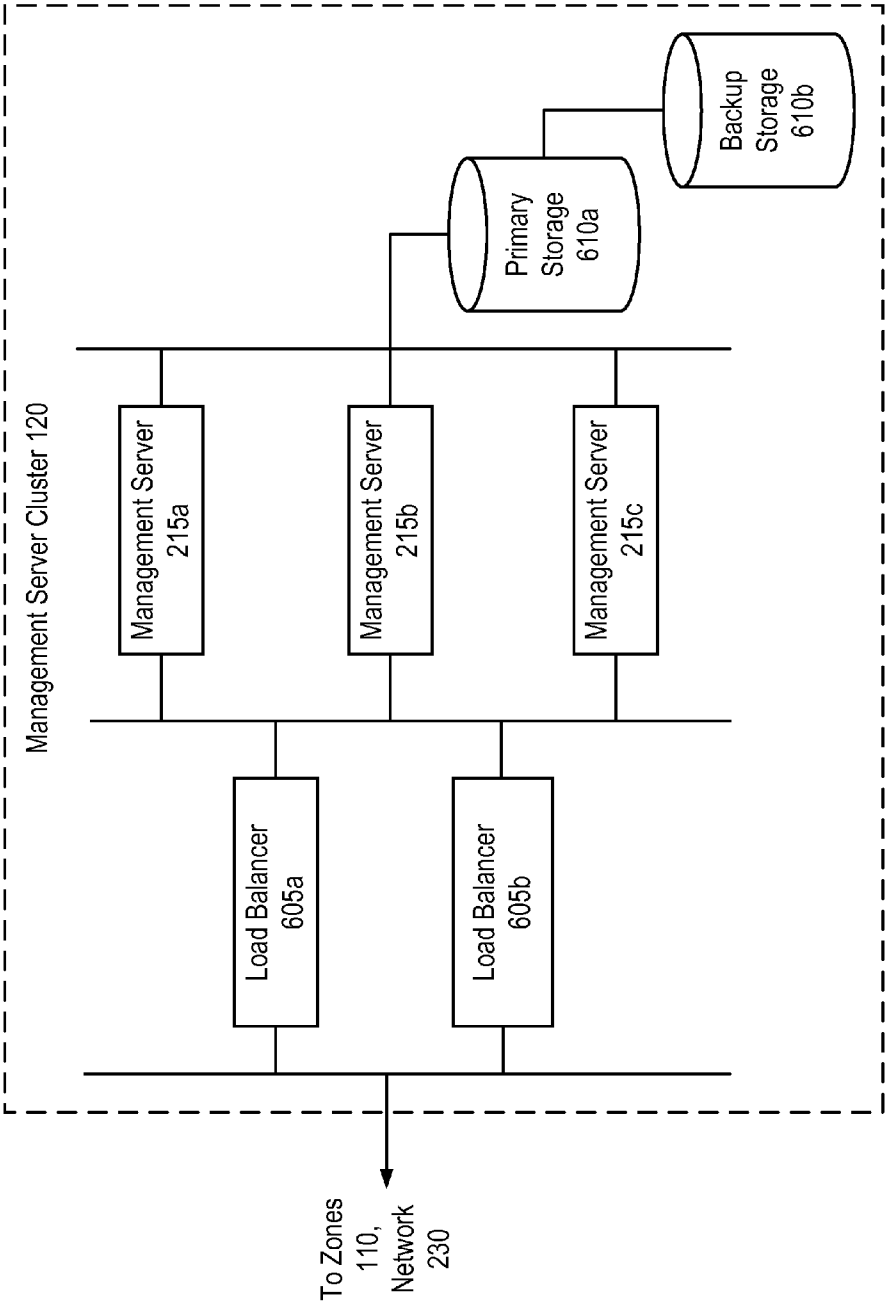
Management Server Cluster 120
Load Balancer 605a
Load Balancer 605b
Management Server 215a
Management Server 215b
Management Server 215c
Primary Storage 610a
Backup Storage 610b
To Zones 110, Network 230

FIG. 6

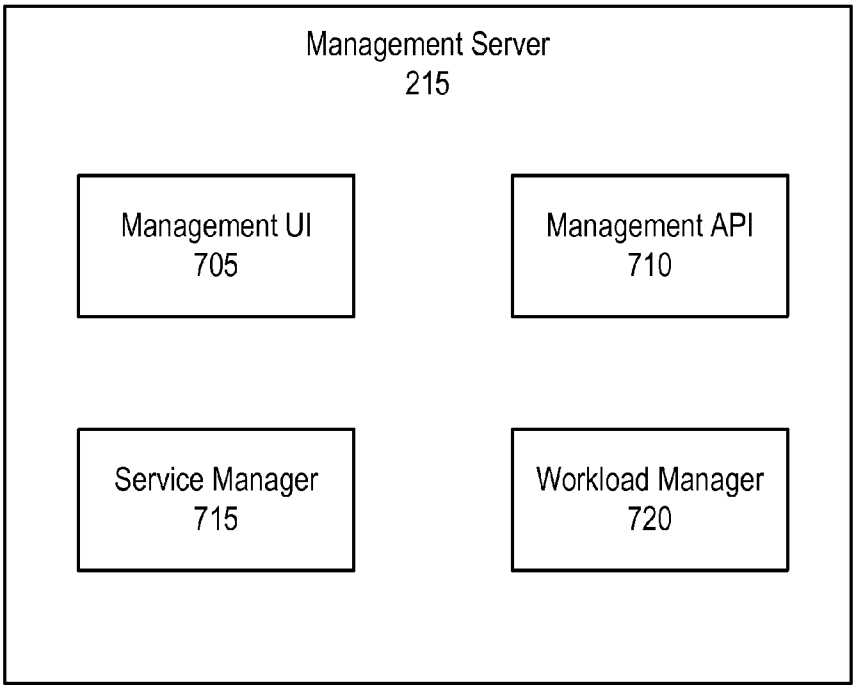
Management Server
215
Management UI
705
Management API
710
Service Manager
715
Workload Manager
720

FIG. 7

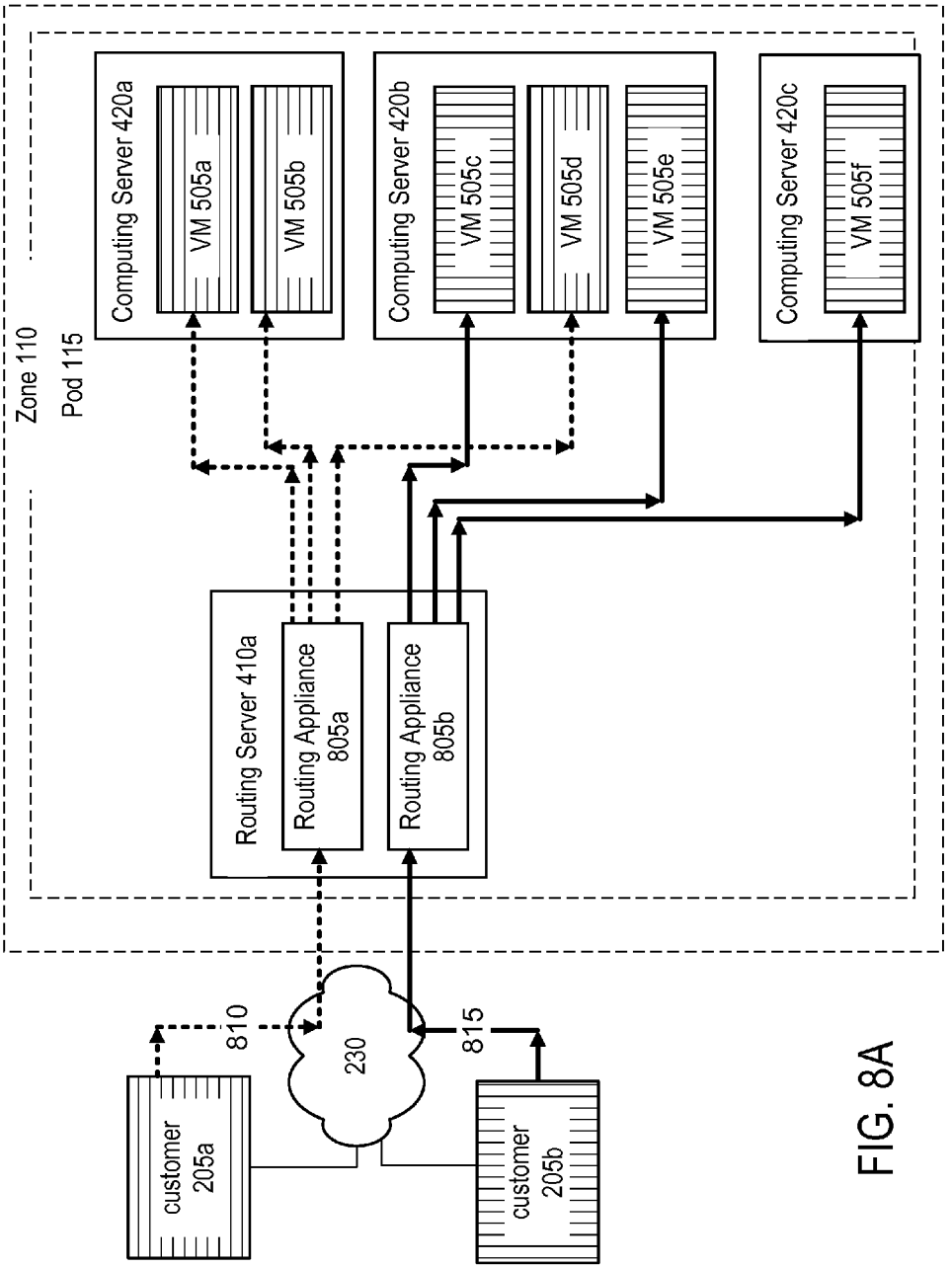
Zone 110
Pod 115
Computing Server 420a
VM 505a
VM 505b
Computing Server 420b
VM 505c
VM 505d
VM 505e
Computing Server 420c
VM 505f
Routing Server 410a
Routing Appliance 805a
Routing Appliance 805b
810
230
815
customer 205a
customer 205b

FIG. 8A

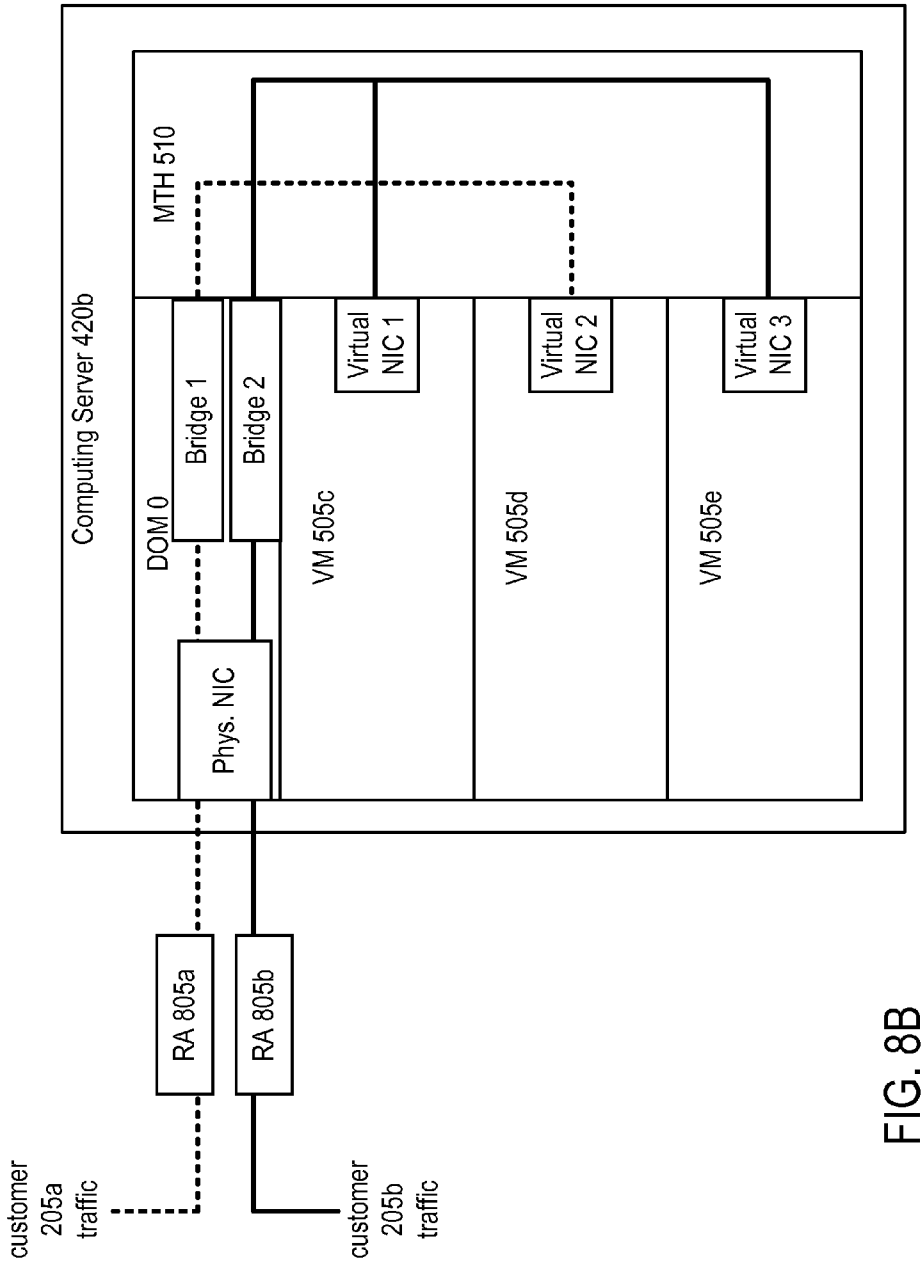
customer 205a traffic
customer 205b traffic
RA 805a
RA 805b
Computing Server 420b
DOM 0
Phys. NIC
Bridge 1
Bridge 2
MTH 510
VM 505c
VM 505d
VM 505e
Virtual NIC 1
Virtual NIC 2
Virtual NIC 3

FIG. 8B

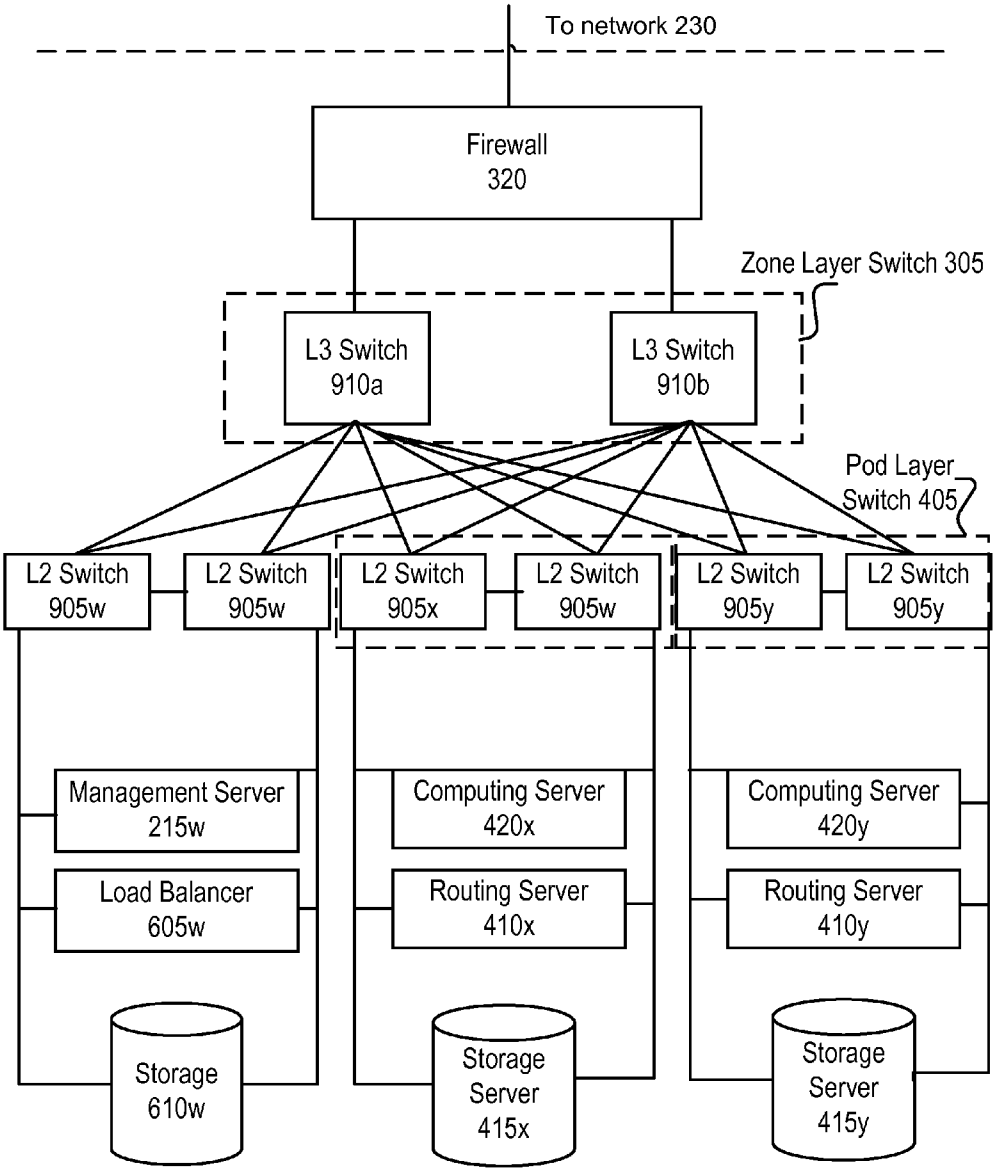
To network 230
Firewall
320
Zone Layer Switch 305
L3 Switch
910a
L3 Switch
910b
Pod Layer
Switch 405
L2 Switch
905w
L2 Switch
905w
L2 Switch
905x
L2 Switch
905w
L2 Switch
905y
L2 Switch
905y
Management Server
215w
Load Balancer
605w
Storage
610w
Computing Server
420x
Routing Server
410x
Storage
Server
415x
Computing Server
420y
Routing Server
410y
Storage
Server
415y

FIG. 9

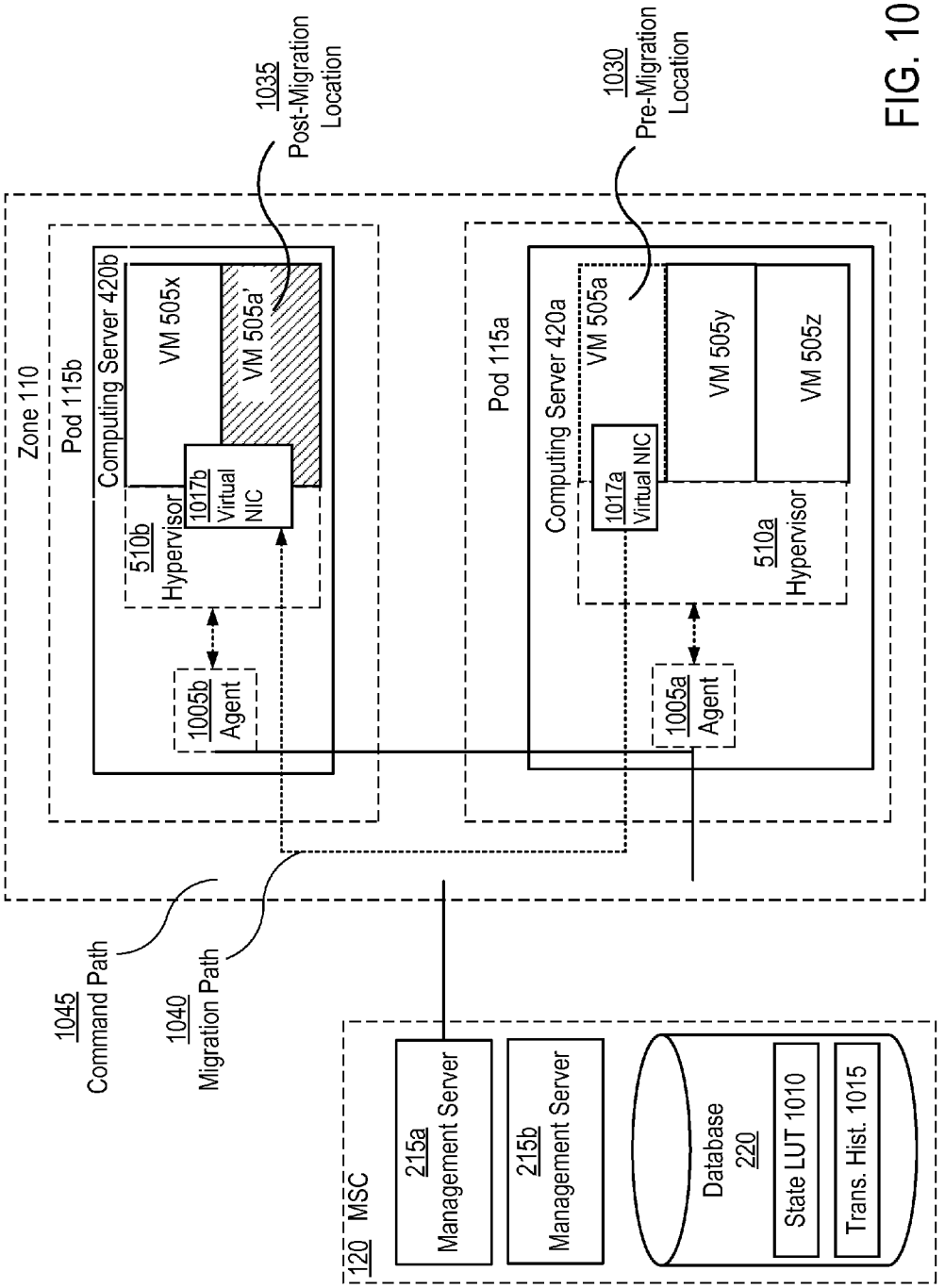
1035
Post-Migration Location
1030
Pre-Migration Location
Zone 110
Pod 115b
Computing Server 420b
VM 505x
VM 505a'
1017b
Virtual NIC
510b
Hypervisor
1005b
Agent
Pod 115a
Computing Server 420a
VM 505a
VM 505y
VM 505z
1017a
Virtual NIC
510a
Hypervisor
1005a
Agent
1045
Command Path
1040
Migration Path
120 MSC
215a
Management Server
215b
Management Server
Database
220
State LUT 1010
Trans. Hist. 1015

FIG. 10

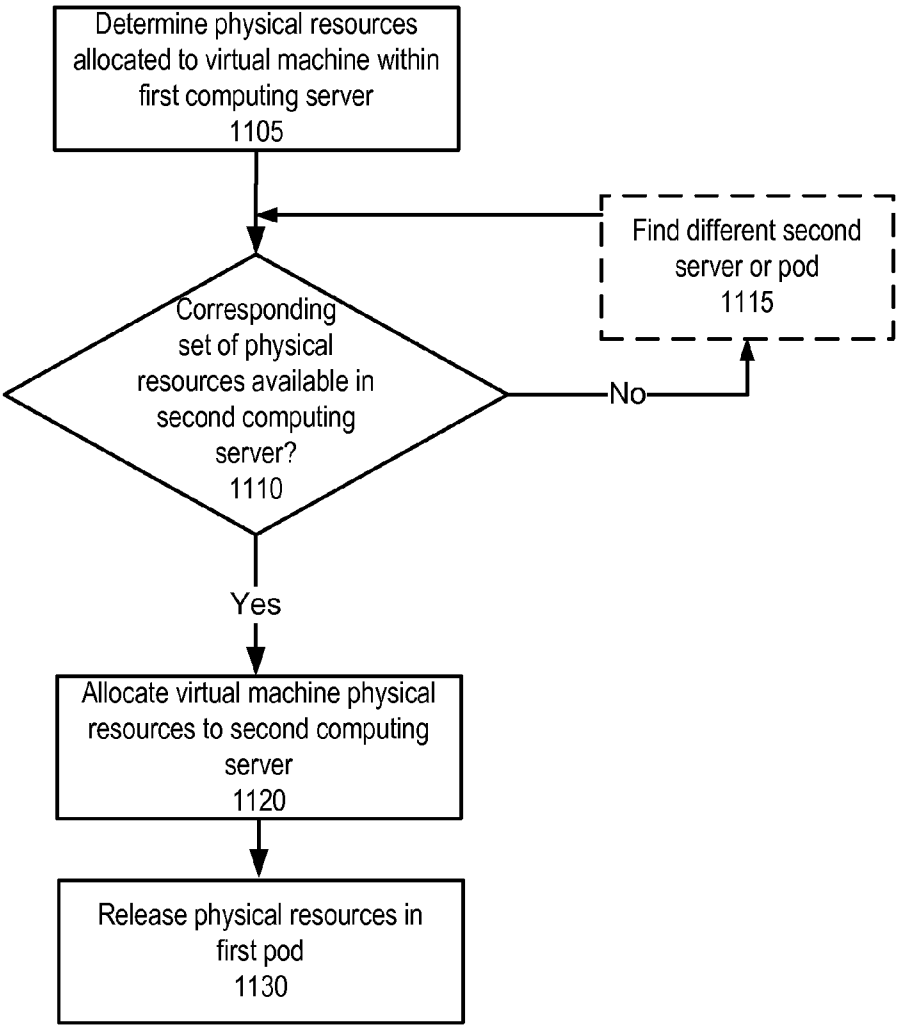
Determine physical resources allocated to virtual machine within first computing server
1105
Find different second server or pod
1115
Corresponding set of physical resources available in second computing server?
1110
No
Yes
Allocate virtual machine physical resources to second computing server
1120
Release physical resources in first pod
1130

FIG. 11

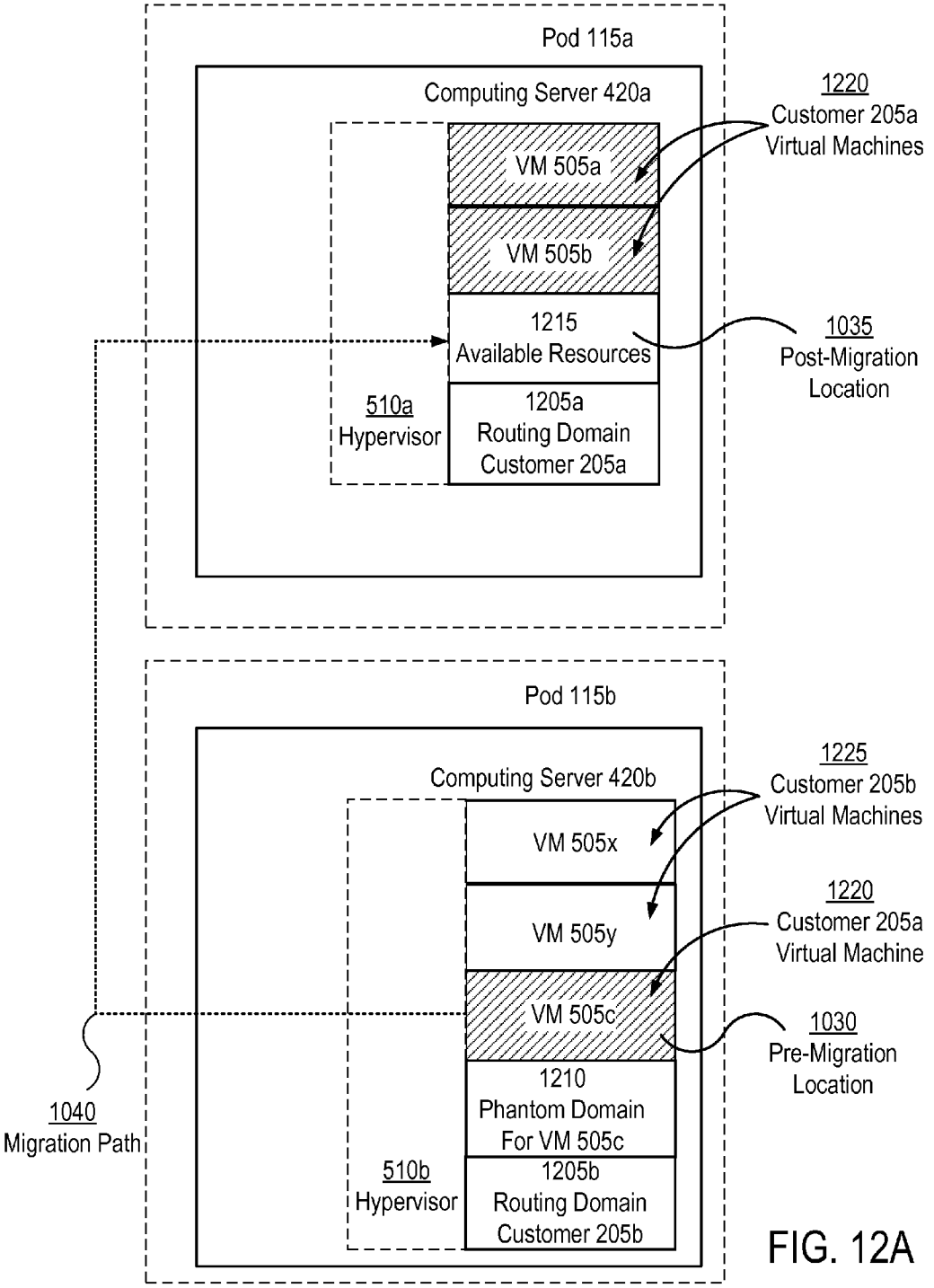
Pod 115a
Computing Server 420a
1220
Customer 205a
Virtual Machines
VM 505a
VM 505b
1215
Available Resources
1035
Post-Migration
Location
510a
Hypervisor
1205a
Routing Domain
Customer 205a
Pod 115b
Computing Server 420b
1225
Customer 205b
Virtual Machines
VM 505x
VM 505y
1220
Customer 205a
Virtual Machine
VM 505c
1030
Pre-Migration
Location
1210
Phantom Domain
For VM 505c
1040
Migration Path
510b
Hypervisor
1205b
Routing Domain
Customer 205b

FIG. 12A

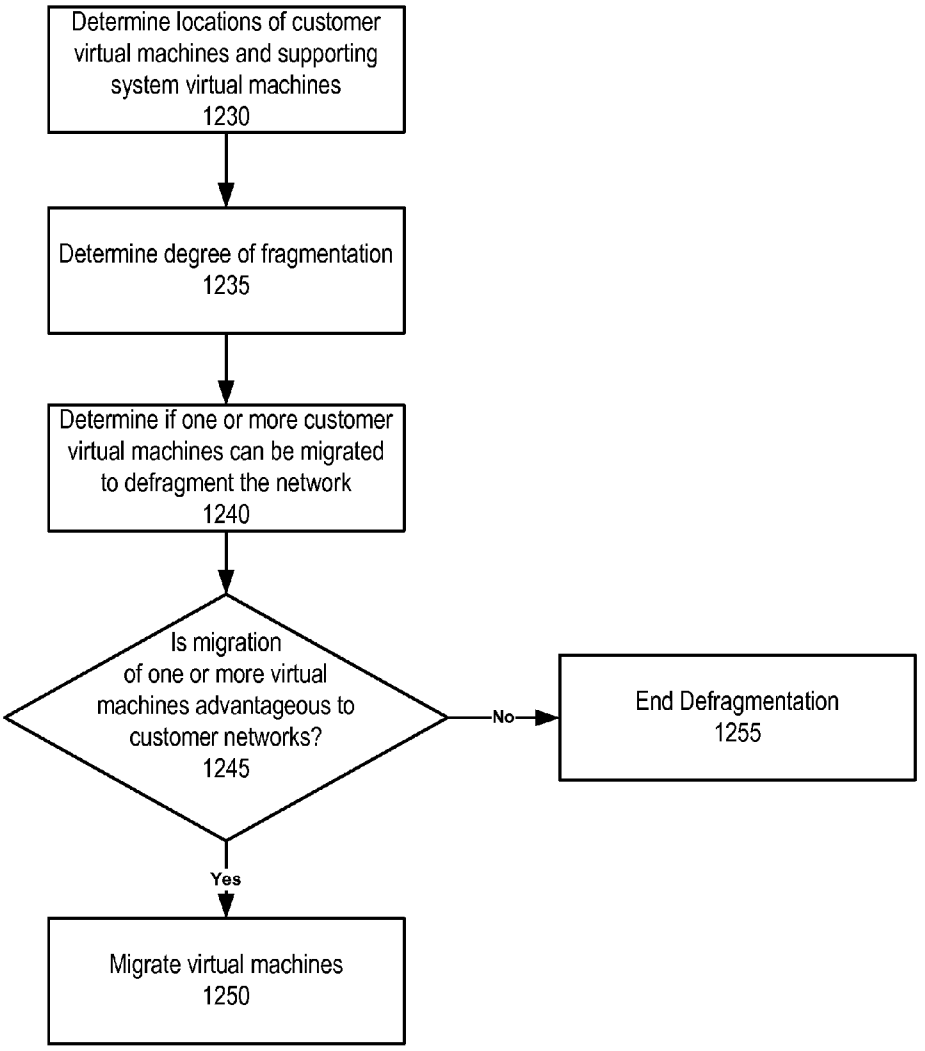
Determine locations of customer virtual machines and supporting system virtual machines 1230
Determine degree of fragmentation 1235
Determine if one or more customer virtual machines can be migrated to defragment the network 1240
Is migration of one or more virtual machines advantageous to customer networks? 1245
No
End Defragmentation 1255
Yes
Migrate virtual machines 1250

FIG. 12B

NETWORK FRAGMENTATION AND VIRTUAL MACHINE MIGRATION IN A SCALABLE CLOUD COMPUTING ENVIRONMENT

CROSS REFERENCE TO OTHER APPLICATIONS

This application claims the benefit, under 35 U.S.C. §119 (e), of U.S. Patent Application No. 61/301,168, filed on Feb. 3, 2010, and incorporated by reference herein.

BACKGROUND

This disclosure generally relates to cloud computing, and, more particularly, to enabling infrastructure information technology services, including computing, storage, and networking services to be provisioned on demand and delivered over the Internet in a scalable manner.

Service providers and enterprises have traditionally relied on large local installations of commodity data center hardware, including computing, storage, and networking devices, to provide information technology services and applications to their users. The advent of computing services that enable applications to run in "the cloud," or on remote data centers that provision computing, storage, and networking services to applications, has left many service providers and enterprises with a large inventory of unused commodity data center hardware.

A cloud infrastructure provides on-demand computing resources to a customer (whether an individual or an enterprise) of the cloud operator through virtualization. The customer typically is physically remote from the computing resource and is agnostic to the location of the physical resources that support the computing resources. In a virtualized cloud infrastructure, the computing resource generally comprises a virtual machine characterized by some amount of processor, memory, storage, networking capability or capacity. Virtualization allows the physical resources support a large number of computing resources, often well beyond the limited number of actual physical devices. Physical resources in the cloud infrastructure are shared amongst the different customers of the cloud infrastructure. Each customer gets the illusion of operating a physically distinct computing resource.

Traditional virtualization infrastructure is built on shared storage and shared Layer-2 (Data Link) networking. These requirements severely limit scalability of conventional cloud systems. In shared storage, the physical disks may be physically separate from the computing server. These disks are typically controlled by a dedicated computer known as a storage controller or storage server. The storage controller provides access to the physical server via network protocols such as NFS and iSCSI. The virtual machines therefore access their storage over the network, but in a transparent fashion such that their storage appears to be locally attached. Each storage server provides storage to multiple physical servers. The virtual machines access their virtual disks over the network via a hypervisor deployed on the physical servers hosting the virtual machines. The hypervisor is responsible for managing the virtual machines' access to the storage servers.

When the storage is networked in such a fashion, it may provide many advantages to the cloud operator. However, a typical infrastructure cloud is characterized by massive scale with hundreds or thousands of customers operating thousands of virtual machines simultaneously, with each customer getting the illusion of operating physically distinct computers. To support such scale, the operator needs to deploy hundreds of physical servers and the networking elements and storage to support these physical servers.

While advantageous as outlined above, commercially available storage servers are not the ideal solution. The storage servers may not scale sufficiently to support such deployments due to architectural limitations. They may be prohibitively expensive or represent more capital outlay than warranted by the initial anticipated demand for the service. They may present single points of failure or increased cost due to deployment of redundant elements. Insurmountable performance bottlenecks may be present, for example, due to the limits of networking speed. Expensive large centralized storage may require long-term technology and vendor lock-in detrimental to the competitiveness of the cloud operator.

The networking elements may provide a similar challenge in large scale cloud deployments. Typically the network between the physical servers is provided by switched Ethernet since it provides performance at optimal price points. However, interconnecting all physical servers using Layer-2 switching has a number of drawbacks.

First, each physical server uses broadcasts and multicasts to discover services and advertise services on the network. As the number of physical servers increases to accommodate a growing number of virtual machines, the amount of broadcast traffic scales accordingly. Broadcast traffic is detrimental to the performance of the network since each server is interrupted by every broadcast even if it is not relevant to the server. Commercially available network switches can often only support a few dozen physical ports—each physical server is connected to one or more ports. Switches can be linked together with high speed switches but at great expense and potentially lower reliability.

Additionally, previous virtualization technologies resorted to one of two approaches: physical host-based network virtualization using software drivers integrated in the hypervisor or physical network/VLAN-based network virtualization, either via port-based VLANs or IEEE 802.1q tagged Ethernet frames. The popular IEEE 802.1Q standard defines a 12-bit tag, which allows more than 4000 VLANs to be supported within a broadcast domain. But neither of these approaches by themselves are sufficient to build a scalable cloud infrastructure.

SUMMARY

In a cloud infrastructure, physical resources are partitioned into pods within one or more zones in a scalable manner. The physical resources comprise physical compute, storage, and networking resources within data centers distributed across a network. Each zone comprises a subset of the pods and is physically isolated from other zones in the plurality. Each pod comprises a discrete set of physical resources in a zone, which resources are tightly connected via a communications network. The physical resources across pods are weakly connected via a communications network, in contrast to the physical resources within pods. Additionally, the cloud infrastructure establishes one or more management server clusters each comprising one or more management servers. In one embodiment, resources are strongly connected by physical and data link level protocols, and weakly connected by network or higher level protocols. In another embodiment, resources are strongly connected by having relatively low latency and/or high bandwidth network links between them, and weakly connected by having high latency and/or low bandwidth network link between them.

The cloud infrastructure serves two or more customers with authenticated accounts. Each customer is associated with units of virtual resources on the cloud infrastructure. The cloud infrastructure establishes units of virtual resources by apportioning selected sets of the physical resources within the pods. The apportioned physical resources may be shared between two or more of the units of virtual resources. Each management server is configured for allocating the units of virtual resources to an account associated with each customer.

The cloud infrastructure comprises one or more data networks built from the distributed networking resources. A data network connects the pods and is configured for routing traffic to the pods from the customers of the cloud infrastructure and vice versa. The cloud infrastructure also comprises establishing one or more management networks. A management network connects the management servers to one of the zones, and connects the compute and storage resources partitioned within the pod.

The scalability of the pod architecture leads to several technical challenges, one of which is the fragmentation of customer virtual machines across a number of pods within a zone. While the architecture itself is designed to network any set of virtual machines within the zone, efficiency of network traffic is degraded as packets for customer virtual machines in separate pods are routed throughout the zone. To address this issue, fragmented customer accounts are migrated to and from computing servers within and between pods.

In one embodiment, a customer's virtual machines are first consolidated on a computing server within a pod, and then to a set of computing servers within pod if allocated resources are greater than one computing server's capability. The benefits are twofold, a customer has the ability to launch a virtual machine within the zone on demand even if their primary computing resource is full; and the launched virtual machine is eventually consolidated with existing customer virtual machines for maximum efficiency within the customer's virtual network.

Migration also allows administrators to take down physical servers within pods or entire pods themselves, thus affording the pod architecture exceptional physical resource management independent of scale. In one embodiment, an administrator configures a management server to migrate virtual machines on a computing server, pod, or number of either, to resources staying online. While taking down servers and pods may lead to fragmentation, customer virtual machines still operate within the architecture. The customer networks are then defragmented or migrated back to their previous location after the computing servers or pods are replaced to restore network efficiency.

Migration also has to be unobtrusive to the customer account from both a network and computing perspective. Pod architecture solves the former fundamentally with its network architecture. The hypervisor solves the latter. Hypervisors are instructed to prepare for virtual machine migration and create a virtual NIC for the customer (if needed) to see their network traffic. Hypervisors migrate and receive migrating virtual machines complete with memory and processing counters to prevent computing discontinuity. Additionally, customer network traffic for the migrating virtual machine is received at the destination via the customer's virtual NIC. The result is the "live migration" of running virtual machines between computing servers.

Accordingly, live migration allows the defragmentation of customer networks to facilitate network and computing efficiency with minimal customer computing interruptions.

In one aspect, there is provided a computer implemented method for migrating a virtual machine across a set of pods, where each pod has a discrete set of physical resources. A set of physical computer, storage, and network resources are allocated to the virtual machine within a first pod. Then it is determined whether a corresponding set of physical compute, storage, and network resources are available in a second pod, having its own set of physical resources. Where the set of corresponding physical resources are available in the second pod, the virtual machine is relocated from the first pod to the second pod by allocating the set of corresponding physical resources in the second pod to the virtual machine and releasing the set of physical compute, storage, and network resources within the first pod.

The features and advantages described in this summary and the following detailed description are not all-inclusive. Many additional features and advantages will be apparent to one of ordinary skill in the art in view of the drawings, specification, and claims hereof.

BRIEF DESCRIPTION OF THE DRAWINGS

FIGS. **1**A-**1**C provide one embodiment of a collective conceptual framework for a scalable cloud infrastructure.

FIG. **2** is one embodiment of a high-level entity diagram for a scalable cloud infrastructure.

FIG. **3** depicts one embodiment of a zone **110**.

FIG. **4** illustrates one embodiment of a pod **115**.

FIG. **5** depicts one embodiment of a computing server **420**.

FIG. **6** shows one embodiment of a management server cluster **120**.

FIG. **7** is a block diagram illustrating one embodiment of a management server **215** architecture.

FIG. **8**A is a conceptual diagram showing one embodiment of an overlay of the virtual machines on the physical devices.

FIG. **8**B shows additional detail for one embodiment of traffic routed between the different virtual machines **505***c*-**505***e* within computing server **420***b*, when the traffic is to/from two different customers **205***a*, **205***b*.

FIG. **9** illustrates switching at different layers in the network architecture of the scalable cloud infrastructure in accordance with one embodiment.

FIG. **10** illustrates one embodiment of the elements used to manage live migration and defragment customer networks in a virtual computing environment.

FIG. **11** is a flow chart illustrating one embodiment of management server logic for determining if a virtual machine can be migrated.

FIG. **12**A illustrates an example of customer network defragmentation.

FIG. **12**B is a flow chart illustrating one embodiment of management server logic for defragmenting a virtual network.

The figures depict various embodiments of the present invention for purposes of illustration only. One skilled in the art will readily recognize from the following discussion that alternative embodiments of the structures and methods illustrated herein may be employed without departing from the principles of the invention described herein.

DETAILED DESCRIPTION

Reference will now be made in detail to several embodiments of the present invention(s), examples of which are illustrated in the accompanying figures. It is noted that wherever practicable similar or like reference numbers may be used in the figures and may indicate similar or like functionality.

FIG. **1**A shows three separate data centers **105**, each housing a number of servers S. A server S is a computer system based upon any type of hardware, including for example low-cost commodity data center hardware: x86 servers connected together using gigabit Ethernet. Service providers and enterprises have traditionally relied upon large local installations of this type of commodity data center hardware, including computing, storage, and networking devices, to provide information technology services and applications to their customers. Currently there is a large inventory of unused data center hardware in the market.

The present invention improves the organization and utilization of data center hardware to provide a scalable cloud infrastructure, by building a system of small blocks within data centers, and connecting the physical servers across data centers using high speed networks. FIGS. **1**B-**1**C illustrate the overall framework for the scalable cloud infrastructure.

FIG. **1**B shows several data centers ("DC") **105** and servers S partitioned into groupings of zones **110**, pods **115** and management server clusters (MSC) **120**. Each zone **110** is physically isolated from each other zone **110**. Typically each data center **105** includes only one zone **110**, however, a data center **105** can include multiple zones **110**, e.g., as shown in data center **105***b*. When two zones such as **110***a*, **110***b* are not geographically distributed, they may still be physically isolated, e.g., via use of a separate power supplies, network uplinks, and other supporting infrastructure. Each zone **110** includes a grouping of pods **115**.

Each pod **115** is a self-contained, physical grouping of servers that acts as a management unit for the scalable cloud infrastructure. Each pod **115** includes a discrete (i.e., non-overlapping) set of the physical resources in the zone **110**. The physical resources in each pod have strong connectivity with each other and weak connectivity with the physical resources outside the pod. The strong connectivity and weak connectivity refer to the latency for traffic between connected physical resources. The latency for traffic may be determined by many different factors.

In one embodiment, strong connectivity and weak connectivity may be switching of traffic between any two connected physical resources on a particular layer of a standard, for instance the OSI model. As an example, strong connectivity may imply Layer-2 switching. Similarly, weak connectivity may imply layer-3 or higher layer switching. In another embodiment, strong connectivity and weak connectivity may be based on the bandwidth available for traffic between the connected physical resources. As an example, strong connectivity may be implemented by provisioning a minimum of 10 GHz links between the connected physical resources. Similarly, weak connectivity may be implemented by a minimum of 1 GHz links between the connected physical resources. Additionally, geographic proximity may also be used to define strong connectivity and weak connectivity. It is possible that geographically distant physical resources have a higher latency for traffic than geographically closer physical resources.

The discrete set of physical resources in a pod **115** may be based on the anticipated processor, memory, network, and storage requirements of potential customers of resources within a zone **110**. For example, a customer's storage and network requirements can be significant. Given a specification of resources, e.g., an average and peak throughput in terms of input-output operations per second (IOPS), and assuming that that throughput is to be divided equally amongst the devices (e.g., virtual machines) in a pod **115**, then the IOPS capacity of the servers determines an overall total number of virtual machines for a pod **115**. If each server within the pod **115** can host a specified number of virtual machines, then a pod **115** could be sized accordingly in terms of the number of servers, storage, and networking requirements.

The pods **115** can be coupled with any number of other pods **115** using Layer-3 switching, thereby enabling unlimited scaling of the number of customers using the scalable cloud infrastructure. The pods **115** allow the scalable cloud infrastructure to be built from smaller units of management, and without a large up-front hardware investment.

FIG. **1**B also shows one or more management server clusters (MSC) **120** to the data centers **105** housing the zones **110**. The management server cluster **120** is a cluster of front-end servers S and their associated backend storage. The servers that make up the management server cluster **120** allocate and manage use of the physical resources in the associated zones **110** by one or more customer accounts associated with units of virtual resources as shown in FIG. **1**C and further described below. A virtual machine is characterized by a combination of the units of virtual resources for processor, memory, storage and networking. In brief, units of virtual resources are established by apportioning selected physical resources within the pods **115** and zones **110**; the physical resources may be shared between units of virtual resources (i.e., may overlap).

Typically the management server cluster **120** is deployed as a primary management server cluster **120***a* in a first datacenter **105***a*, with a back up management server cluster **120***b* installation at a second datacenter **105***c*.

In one embodiment, data stored by the first management cluster **120***a* is replicated and transmitted for storage by the second management cluster **120***b*. In response to a failure of the first management cluster **120***a*, the domain name system (DNS) records are updated in the servers in the zones **110** such that network traffic that would normally be directed to the first management server cluster **120***a* instead is directed to the second management server cluster **120***b*. Thus, operation of the servers in the zones **110** is unaffected by failure of the first management server cluster **120***a*. The two management server clusters **120** are isolated from one another by residing in different data centers **105***a*, **105***c* to minimize the likelihood of simultaneous failure of the management server clusters **120**.

It is within the architectural framework of FIGS. **1**B-**1**C that the scalable cloud infrastructure is further described herein.

FIG. **2** is a high-level entity diagram for one embodiment of a scalable cloud infrastructure. The entities included are one or more customers **205**, an administrator **210**, one or more management server clusters **120** and servers **240**, which are physical resources within zones **110** in data centers **105**, connected to a network **230**. The data center **105** are partitioned into a plurality of zones **110**, and each zone contains one or more pods **115**, as described above. Each zone **110** is connected to a management server **215** in the management server cluster **120** and to the network **230**. The network **230** is the Internet according to one embodiment, but may be any other network, including but not limited to any combination of a LAN, a WAN, a MAN, a mobile, a wired or wireless network, a private network, or a virtual private network, where Layer 2 and Layer 3 switching is required.

The administrator **210**, or operator of the cloud infrastructure, deploys the various resources as discussed above. In one embodiment, the operator of the cloud infrastructure is distinct from one or more providers of the resources, e.g., a provider may own any number of virtual machines that will be

used by the administrator **210** in the cloud infrastructure. In one embodiment, the provider owns a large number of servers **240**.

One or more customers **205** are users of portions of the resources of the cloud infrastructure. The term customer may refer to either the device or the user (entity or person). Customers **205** access the resources associated with their respective customer accounts and are connected to the resources via the network **230**. Details of customer **205** account resource allocation and access to those resources are discussed further in conjunction with FIGS. **8** and **9**.

The management server cluster **120** is a cluster of management servers **215** and their associated database **220**. As indicated in conjunction with FIG. **1**C, the management server cluster **120** serves multiple zones **110** and pods **115** within data centers **105**. The management server cluster **120** also maintains customer account information. For example, the management server cluster **120** may establish virtual machines, units of virtual resources, by apportioning the physical resources within the pods to each of the units. The physical resources may be shared between two or more of the virtual machines. Although one management server cluster **120** is depicted, multiple management server clusters **120** may be distributed throughout the cloud infrastructure, each serving a plurality of data centers **105** and zones **110**. The details of the management server cluster **120** are described further in conjunction with FIG. **6**.

Each management server **215** allocates and manages use of the physical resources within one or more zones **110**. For example, management server **215***a* manages the resources in zone **110***a*, management server **215***b* manages the resources in zone **110***b*, and management server **215***c* manages the resources in zone **110***c*. A management network may connect each of the management servers **215** to a zone **110**, and may also connect the physical resources within the pod **115**. A management server **215** can allocate to, and manage, units of virtual resources associating customer accounts with the physical resources in a zone **110** associated with that management server **215**. The details of the management server **215** are described further in conjunction with FIG. **7**. The database **220** can be any database commonly used for storage. According to one embodiment, the database **220** is a MySQL database.

The data centers **105**, zones **110**, and pods **115** were described briefly in conjunction with FIG. **1**B-**1**C. Switching within the zones **110** typically is Layer 3 switching, while switching within the pods **115** typically is Layer 2 switching, providing unlimited scaling of the cloud infrastructure. Zones **110** are described in greater detail in conjunction with FIG. **3**, pods **115** are described in greater detail in conjunction with FIG. **4**, and the servers in each pod **115** are described further in conjunction with FIG. **5**

FIG. **3** depicts one embodiment of a zone **110**. As discussed above, a zone **110** is a grouping of physical devices, including a grouping of pods **115**, that is physically isolated from other zones **110**. Devices within a zone **110** utilize a one or more power supplies and/or network uplink(s) that are dedicated solely to the zone **110**. The zone **110** includes a zone layer switch **305** that process traffic in and out of the zone **110** over a data network **310** and a management network **315**. The zone **110** is separated from other devices on the network **230** by a firewall **320**.

The zone layer switch **305** manages the network traffic to and from the pods **115** within the zone **110** and comprises one or more Layer 3 ("L3") (i.e., network layer) switches. For a zone **110** comprising the servers in a small data center **105**, a pair of L3 switches may suffice. For large data centers, high-end core switches may implement core routing capabilities and include line cards that support firewall capabilities. A router redundancy protocol like VRRP also may be deployed. Traffic within the zone **110** (and/or pods **115**) also is switched at other levels of either the OSI model or other networking models, as described further below.

One embodiment of the zone layer switch **305** supports two internal networks within the zone **110**: a data network **310** and a management network **315**. The data network **310** is used to carry traffic to and from the zone **110** from customers **205** and other entities on the network **230**. For example, operation of virtual machines implemented on the servers within the pods **115** of the zone **110**, e.g., if a virtual machine within the zone **110** issues an HTTP request over the network **230**, both the HTTP request and any associated HTTP response will be routed via the data network **310**.

The management network **315** is used to carry traffic to and from the zone **110** from the management server cluster **120** (and individual management servers **215** within the management server cluster **120**), as well as traffic generated internally within the zone **110**. Each pod **115** in the zone **110** is communicatively coupled to both the data network **310** and the management network **315**.

All traffic in and out of the zone **110** passes through a firewall **320**. The firewall **320** may comprise one or more network firewalls specific to each internal network **310**, **315**. The firewall **320** provides connection to the public network space (i.e., network **230**) and is configured in routing mode.

In one embodiment, the firewall **320** operates in a transparent mode for the data network **310** such that the data network **310** comprises the same IP address space as the public Internet. For example, if the data network **310** utilizes public IP addresses, the zone **110** is assigned a unique set of IP addresses that do not overlap with the IP addresses assigned to other zones **110**.

In one embodiment, the firewall **320** operates in a network address translation (NAT) mode for the management network **315**. For example, the zone **110** can be assigned an IP address in the 192.168.0.0/16 Class B private address space, and each pod **115** within the zone **110** can be assigned an IP address in the 192.168.*.0/24 Class C private address space; the firewall **320** remaps between the two address spaces as data is sent to or from the pods **115** within the zone **110**. Hence, it is possible for the pods **115** of different zones **110** to have overlapping or identical private IP addresses. In some embodiments, the firewall **320** is outside of the zone **110** such that it filters traffic to both the zone **110** and the management server cluster **120**. In some embodiments, the firewall **320** enables site-to-site VPN such that servers in different zones **110** can reach each other within a virtual private network.

FIG. **4** illustrates one embodiment of a pod **115**. The pod **115**, as described above comprises a discrete set of the plurality of physical resources in the zone **110**. The servers in a pod **115** typically comprise one or more each of routing servers **410**, storage servers **415**, and computing servers **420**. In one embodiment, distinct routing servers **410** and computing servers **420** are used, whereas in another embodiment (not shown), they are one and the same and provide both functionalities described below. Traffic on the management network **310** and data network **315** in and out of the pod **115** is switched by one or more pod layer switches **405**. The servers in a pod, both individually and collectively are implemented by one or more computer systems.

The routing servers **410** are configured primarily to provide networking for computer data by the inclusion of suitable networking hardware (network interfaces, networking ports, and the like). The routing servers **410** can be implemented

using any manner of suitable networking hardware and software, and in some instances are combined with computing servers **420**.

The storage servers **415** are implemented as any device or combination of devices capable of persistently storing data in non-transitory computer-readable storage media, such as a hard disk drive, RAM, a writable compact disk (CD) or DVD, a solid-state memory device, or other optical/magnetic storage mediums. Other types of computer-readable storage mediums can be used, and it is expected that as new storage mediums are developed in the future, they can be configured in accordance with the teachings here. In addition, the storage servers **415** support local or distributed databases for storing customer information; in one embodiment the database are MySQL databases.

Typically single uniform storage servers do not scale to more than a few dozen servers. A system architecture using pods **115**, however, allows multiple smaller storage servers **415** to be associated with each pod **115**. Pod-level shared storage delivers the benefit of shared storage such as the ability to restart virtual machines on a server different than where the virtual machine last ran, which provides the ability to start up, shut down, and reallocate available servers.

The computing servers **420** host the virtual machines within the pod **115** as will be discussed further in conjunction with FIG. **5**. The computing servers **420** may comprise computing, routing, and/or storage servers having different processing, memory, storage, and networking capabilities according to various embodiments, and may perform all of the functions of routing servers **410** in embodiments that exclude separate routing servers **410**. Additionally, the computing servers **420** can utilize different data storage systems, such as direct-attached storage (DAS), network-attached storage (NAS), or a storage area network (SAN).

The pod layer switch **405** switches network traffic into and out of the pod **115**. The pod layer switch **405** may comprise one or more pod layer switches. The pod layer switch **405** typically is a Layer 2 switch, but switching is also possible at other levels of either the OSI model or other networking models. In alternate embodiments, the pod **115** may implement internal networks in addition to or distinct from the data network **310** and the management network **315**.

In one embodiment, a public switch may be used for public traffic (e.g. traffic on the data network **310**) and a private switch for management traffic (e.g. traffic on the management network **315**). Storage traffic (e.g., traffic between the computing servers **420** and the storage servers **415** via the private switch) may be isolated from other traffic to avoid packet loss and delays that are common with regular TCP/IP traffic, and to protect the servers **240** from potentially malicious Internet traffic. In addition, the storage traffic may be directed over a higher speed switch to meet the higher performance demands of the storage system.

In one embodiment of the pod **115**, the pod layer switch(es) **405** are duplicated for redundancy, with each computing server **420** connected to multiple switches. Further, it should be noted that multiple layers of switches can be coupled to effectively form a pod layer switch **405** with an increased number of ports.

In another embodiment of the pod **115** design, Virtual LANs (VLANs) are used to segment traffic while using a single pod layer switch **405**. The pod layer switch **405** may support quality of service guarantees for virtual machines within the pod; the storage VLAN is then given the appropriate share of the available bandwidth on the switch to meet the IOPS requirements of such virtual machines.

The VLANs for the management, public and storage traffic may be created before the pod is deployed into production, by programming the pod layer switch **405** using the usual management interfaces. The storage server **415** is also configured to use the storage and management VLANs using the usual management interfaces of the storage server **415**. In other embodiments, more than one traffic type can be directed over a single switch while other traffic types can have their own separate switches. For example, guest traffic, which refers of traffic between the virtual machines of each customer, may be segmented using VLANs and directed on the same switch as management traffic.

FIG. **5** depicts one embodiment of a computing server **420**. The computing server **420** hosts one or more virtual machines **505** and a multitenant hypervisor **510**. The computing server **420** is communicatively coupled to at least the management network **315**, and may also be coupled to the data network **310** in embodiments without separate routing servers **410**. In other embodiments, the virtual machines **505** and the multitenant hypervisor **510** each are individually coupled to the management network **315**.

In one embodiment, the multitenant hypervisor **510** is implemented on the computing server **420** as a set of computer-executable instructions encoded onto a non-transitory computer-readable storage medium included in the computing server **420** and executed by a processor included in the computing server **420**. The multitenant hypervisor **510** therefore can comprise, for example, a software layer that manages the physical computing elements (e.g., processors, memory, network cards and interfaces, data storage disks) of the computing server **420**. The virtual machines **505** access and use these physical computing elements as dictated by the multitenant hypervisor **510**. The multitenant hypervisor **510** can alter the allocation and accessibility of computing elements within the computing server **420** over time in response to changes in the number and configurations of hosted virtual machines **505**. The changes in the number and configurations of hosted virtual machines **505** may occur, for example, because the customers **205** associated with the hosted virtual machines **505** made such a request or changes have occurred at other virtual machines **505** associated with the customer **205**.

A number of virtual machines **505** may run on the computing server **420**. The virtual machine **505** comprises an allocation of the computer hardware and computer software elements of the computing server **420**. The virtual machine **505** simulates a physical computing device and can be configured to perform any computing task via inclusion of appropriate computer hardware and/or computer software elements therein. For example, a virtual machine **505** can simulate a physical computing device having a 1 GHz processor, 1 GB of memory, and a 16 GB hard drive.

A virtual machine **505** is associated exclusively with a single customer **205**. However, a computing server **420** may host a set of virtual machines **505**, each associated with different customers **205**. For example, in FIG. **5**, one customer **205** may be associated with virtual machine **505***a*, where as another customer may be associated with virtual machine **505***b* and **505***c*.

A single computing server **420** simultaneously can host virtual machines **505** associated with different customers **205**, but the multitenant hypervisor **510**, along with the associated management server **215**, manages the hosted virtual machines **505** such that each virtual machine **505** appears to the corresponding customer **205** as a physically distinct and self-contained computing device.

In one embodiment, the virtual machine **505** comprises a processing resource **525**, a memory resource **530**, a storage resource **535**, a networking resource **515**, and a user interaction resource **520**. The resources **515-535** of the virtual machine **505** comprise allocations of the computer hardware and/or computer software elements of the computing server **420**, according to the units of virtual resources designated for a given customer account. The processing resource **525** comprises an allocation portion of one or more computer processors. The memory resource **530** and the storage resource **535** can comprise an allocation of any physical device or combination of physical devices capable of persistently storing computer data, such as a hard disk drive, random-access memory (RAM), a writable compact disk (CD) or DVD, a solid-state memory device, or other optical/magnetic storage mediums. Other types of non-transitory computer readable storage mediums can be used for the memory resource **530** and/or the storage resource **535**, and it is expected that as new storage mediums are developed in the future, they can be configured in accordance with the teachings here. In one embodiment, the memory resource **530** provides operational memory and comprises a specified amount of RAM. The storage resource **535** provides long-term data storage and, again, can comprise any suitable type of non-transitory computer readable storage medium such as one or more hard disk drives.

The networking resource **515** comprises an allocation of computer networking hardware and software elements to enable the virtual machine **505** to communicate with other networked entities over the management network **315**. One or more IP addresses can be associated with the virtual machine **505** and supported by the networking resource **515**. Accordingly, the networking resource **515** can include any type of communication interface suitable for transmitting and receiving data over the network **315**. For example, the networking resource **515** can comprise an Internet interface, a serial interface, a parallel interface, a USB (Universal Serial Bus) interface, an Ethernet interface, a T1 interface, a Bluetooth interface, IEEE 802.11 interface, IEEE 802.16 interface, or any other type of wired or wireless communication interface.

The user interaction resource **530** comprises hardware and software elements to enable the customer **205** or administrator **210** to interact with the virtual machine **505**. For example, the user interaction resource **520** can provide display elements, such as a graphical user interface (GUI) whereby either the customer **205** or administrator **210** can interact with and manage operation of the virtual machine **505**. The user interaction resource **530** can also support a keyboard, and mouse, or the like to further enable the customer **205** or administrator **210** to manage operation of the virtual machine **505**.

In some embodiments, the resources **515-535** of the virtual machine **505** are supported within a single computing device, such as a server. In other embodiments, portions of the virtual machine **505** can be distributed among any number of physically separate computing devices that are communicatively coupled via the network **315**. For example, the storage resource **535** can comprise multiple hard-drives residing on multiple servers. Because the resources **515-535** are communicatively coupled to one another, the virtual machine **505** appears to the customer **205** to be a single computing device that includes the cumulative capabilities of the resources **515-535** regardless of the actual physical location or distribution of any computer hardware or software elements associated with of the resources **515-535**.

In some embodiments, there is a specially designated virtual machine called the management domain that provides a standard set of commands to control the multitenant hypervisor **510**, for example, to start and stop virtual machines, and to control the networking stack of the multitenant hypervisor **510**. In other embodiments, the multitenant hypervisor **510** is hosted by a host operating system and the virtual machines operate as processes of the operating system with the multitenant hypervisor **510** providing isolation. The multitenant hypervisor **510** ensures that the virtual machines share the physical resources of the compute host such as the processor, memory, network interfaces and storage. In some cases, the multitenant hypervisor **510** defers the operation and management of the network stack and storage interfaces to the management domain or host operating system.

The physical network interfaces are shared among the virtual machines by the multitenant hypervisor **510**. In one embodiment, the virtual machines get the illusion of possessing a standard physical network interface such as those provided by commercially available network interface cards. The multitenant hypervisor **510** ensures that these virtual interfaces are connected to the underlying physical network interfaces of the compute host.

The cloud infrastructure comprises a management server **215** interacting with agents that in turn interact with and control the multitenant hypervisor **510** using its standard set of commands. In one embodiment there may be one agent running in each operating system or management domain on a server **240**. In other embodiments one agent may interact with a group of servers **240** whose multitenant hypervisors have been clustered using cluster management software. The agents are controlled by the management server **215**.

The management server **215** also interacts with the storage servers **415** in order to create and destroy the virtual disks for the virtual machines. In one embodiment, a special version of the agent known as the storage agent runs on the processor subsystem of the storage server **415** to perform these activities. In another embodiment, the management server **215** uses the standard set of commands provided by the management server **215**, or its Application Programming Interface (API) to create and destroy virtual disks.

The storage server **415** presents virtual disks to the computing server **420**. In one embodiment, the virtual disks are visible as networked file systems to the multitenant hypervisor **510**. In another embodiment the virtual disks are presented as block devices to the multitenant hypervisor **510**. The multitenant hypervisor **510** ensures that these virtual disks are presented to the virtual machine while giving the illusion of locally attached storage to the virtual machines.

The multitenant hypervisor **510** provides a standard set of commands that the agent uses. Some examples of the command set are: start a virtual machine, stop a virtual machine, reboot a virtual machine, add or remove a virtual disk for a virtual machine, add or remove a virtual network interface for a virtual machine, mount/dismount a virtual disk from the storage server **415**, add or remove VLANs from the physical network interfaces of the server **240**.

The agents collect information from the computing servers **420** and storage servers **415** and report to the management server **215**. The management server **215** maintains the reported information in database tables. The database includes for example: the state of the multitenant hypervisor **510**, the state of the virtual machines, the configuration of the networking stack, such as configured VLANS (explained subsequently in the description of FIG. **8**), IP addresses, speeds and aggregations of the physical network interfaces, storage resources visible from the compute server **420**, the capabilities of the multitenant hypervisor **510**, the capabilities of the storage server **415**, the capacity, used and allocated

size of the storage server **415**, statistics such as network traffic consumed by the virtual machine, processor and memory usage of virtual machine.

The management server commands the agent to perform certain actions in response to actions by the cloud customer or cloud operator at the user interface or API. For example, when a customer starts a virtual machine, the management server **215** may look up its table of servers **240** and identify a server **240** that has enough spare capacity to satisfy the requested processing, memory and network resources for the virtual machine. The management server **215** may also look up its table of virtual machines to verify if the virtual machine is already running or if its virtual disks already exist on a storage server **415**. If the virtual machine is not already running or its virtual disks do not exist, the management server **215** may command the storage server **415** or storage agent to create the disks.

The management agent then sends a start virtual machine instruction to the agent for the compute host chosen in step 1. In the start instruction are included information such as: the portion of the physical processors to allocate to the virtual machine, the virtual network interfaces to create for the virtual machine and their mapping to the physical interfaces and identification of the virtual disks to present to the virtual machine.

The agent may then instructs the multitenant hypervisor **510** on the computing server **240** (or computing server **420** in the example of FIG. **5**) to mount the virtual disks from the storage server **415**, create the virtual network interfaces and start the virtual machine with the desired processors, memory, network interfaces and disk. The agent verifies that the virtual machine has started using the hypervisor command set and reports the success to the management server **215**. The management server **215** updates its table of virtual machines with information about the virtual machine including the server **240** it is running on.

The management network **315** handles traffic associated with the multitenant hypervisor **510** executed by the computing servers **420** within the pods **115** of the zone **110**. Hence, traffic on the management network **315** may additionally comprise messages between a multitenant hypervisor **510** and a virtual machine **505** (e.g., messages related to the allocation of the physical computing elements of the particular computing server **420** to a particular virtual machine **505**).

In an embodiment of the invention, network and storage isolation may comprise isolation of data alone and not quality of service. In other embodiments, the quality of service capabilities built into the multitenant hypervisor's **510** as well as network and storage hardware may be used to support enhanced isolation.

Network bandwidth throttling is used to limit the rate of traffic from each virtual machine. The operator of the cloud infrastructure may configure the management server **215** with the desired maximum network bandwidth for each virtual machine. The configuration can be done on a per-service-offering basis, a per-customer account basis or across the cloud. A management server **215** includes this maximum in the start instructions sent down to the multitenant hypervisor **510** when starting a virtual machine. The multitenant hypervisor **510** uses a standard set of commands to limit the guest traffic from the new virtual machine.

Storage bandwidth throttling is used to limit the rate of storage traffic from each virtual machine while reading or writing to a virtual disk. The operator of the cloud infrastructure may configure the management server **215** with the desired maximum IOPs bandwidth for each virtual machine. As before, the configuration can be done on a per-service-offering basis, a per-consumer basis or across the cloud. The management server includes this maximum in the start instructions send down to the multitenant hypervisor **510** when starting a virtual machine. The multitenant hypervisor **510** uses a standard set of commands to limit the storage traffic from the new virtual machine to a maximum number of IOPS as defined by the operator of the cloud infrastructure.

FIG. **6** shows one embodiment of a management server cluster **120**. As noted above, the management server cluster **120** is a cluster of front-end servers and their associated backend storage. The servers **215** that make up the management server cluster **120** allocate and manage use of the physical resources in the associated zones **110** by one or more customer accounts associated with units of virtual resources.

The depicted management server cluster **120** comprises three management servers **215**, two load balancers **205**, primary storage **610***a*, and backup storage **610***b*. Other embodiments of a management server cluster **120** may comprise different numbers of management servers **215** and load balancers **605**.

The management servers **215** are communicatively coupled to the load balancers **605**, and the load balancers **605** are communicatively coupled to the networks **310**, **315**. Thus, the management servers **215** can transmit and receive data and commands via the networks **310**, **315** through the load balancers **605**. The load balancers **605** distribute traffic from the networks **310**, **315** and associated workload among the management servers **215** to optimize utilization of the management servers **215**. In some embodiments, the load balancers **605** comprise dedicated hardware devices (e.g., multi-layer hardware switching devices or severs configured to provide load balancing functionality). In other embodiments, the load balancers **605** comprise load balancing software installed on the management servers **215**.

The primary storage **610***a* and the backup storage **610***b* can be implemented as any device or combination of devices capable of persistently storing data in non-transitory computer-readable storage media, such as a hard disk drive, RAM, a writable compact disk (CD) or DVD, a solid-state memory device, or other optical/magnetic storage mediums. Other types of computer-readable storage mediums can be used, and it is expected that as new storage mediums are developed in the future, they can be configured in accordance with the teachings here. In one embodiment, the primary storage **610***a* and the backup storage **610***b* further comprise MySQL databases. The primary storage **610***a* and backup storage **610***b* can also comprise one or more dedicated storage servers. The primary storage **610***a* for the management server cluster **120** is communicatively coupled to the management servers **215** and provides data storage as required by the management servers **215**. The backup storage **610***b* is communicatively coupled to the primary storage **610***a* and comprises a replicated version of the data stored by the primary storage **610***a*. The devices in the management server cluster **120** may be Layer 2 switched.

FIG. **7** is a block diagram illustrating one embodiment of a management server **215** architecture. The operations of the management server **215** as described herein can be controlled through either hardware (e.g., dedicated computing devices or daughter-boards in general purpose computers), or through computer programs installed in computer storage of the management server **215** and executed by one or more processors of the management server **215** to perform the functions described herein. One of skill in the art of system engineering will readily determine from the functional and algorithmic descriptions herein the construction and operation of such computer programs.

In one embodiment, the management server **215** comprises a management user interface (UI) **705**, a management application programming interface (API) **710**, a service manager **715**, and a workload manager **720**.

In one embodiment, the management UI **705** provides the primary user interface for customers **205** and administrators **210**. The management UI **705** can provide a graphical user interface (GUI) that is accessible over the networks **310**, **315** via a conventional web browser using any networked computing device. A customer can, for example, input specifications for configuring a new virtual machine **505** using a web GUI provided by the management UI **705**. More particularly, a customer configures a virtual machine by specifying the amount of processor, storage, memory and networking resources, in appropriate units (e.g., processor speed for processors, amount in mega- or giga-bytes for storage and memory, and throughput for networking).

A customer can also interact with a configured virtual machine **505** using a web GUI provided by the management UI **705** by, for example, inputting data for processing by the virtual machine **505**, viewing outputs computed by the virtual machine **505**, and inputting commands related to a complete or partial shutdown of the virtual machine **505**. The management UI **705** can provide a different web GUI for a customer **205** than for an administrator **210**.

One embodiment of the management API **710** allows an administrator **210** (or a customer **205** with appropriate access credentials) to further oversee virtual machine **505**. For example, the management API **710** can enable customization of the primary user interface provided by the management UI **705**. The management API **710** can also allow customization of billing policies and procedures, as well as access policies (e.g., granting different levels of access to a virtual machine **505** based on credentials associated with a customer **205**).

The service manager **715** communicates with computing servers **420** to oversee the creation, operation, and shutdown of virtual machines **505**. For example, the service manager **715** can receive specifications for a virtual machine **505** from the management UI **705**, select a computing server **420** suitable for hosting the virtual machine **505**, and transmit commands to the selected computing server **420** that case the computing server **420** to implement the virtual machine **505**. Once the virtual machine **505** is configured and implemented on the computing server **420**, the service manager **715** can monitor its operation and implement corresponding billing and access policies, e.g., via routing appliance **805** discussed further in FIG. **8**. For example, the service manager **715** can bill a customer $20 per hour of operation for a virtual machine **505** with processing equivalent to a 1 GHz processor, memory equivalent to 1 GB of RAM, and storage equivalent to a 250 GB hard drive, as well as $0.10 per GB of network traffic associated with the networking resource of the virtual machine **505**.

The workload manager **720** interacts with the multitenant hypervisors **510** installed on the computing servers **420**. The workload manager **720** monitors the status (e.g., availability and workload) of the different physical computing elements included in the computing servers **720**. The workload manager **720** can also oversee the transfer of a virtual machine **505** from a first computing server **420** to a second computing server **420** upon failure of the first computing server **420** or an imbalance of workload between computing servers **420**.

FIG. **8**A is a block diagram showing one embodiment of an overlay of the virtual machines allocated to two customers **205***a*, **205***b* on the physical devices, e.g., virtual machines **505***a*-**505***f*. As shown, virtual resources such as virtual machines **505**, are allocated to customer accounts associated with customers **205***a* and **205***b*. In this example, virtual machines **505***a*, **505***b*, and **505***d* are allocated to customer **205***a* and virtual machines **505***c*, **505***e*, and **505***f* are allocated to customer **205***b*. The virtual resources correspond to physical resources within various computing servers **420** within a pod **115** and zone **110**. Note that some of the physical resources are shared, at least in part, by customers **205***a*, **205***b*. For example, computing server **420***b* is shared by both customers **205***a*, **205***b*.

In a cloud infrastructure serving multiple customers, the administrator **210** may ensure that accesses are secure and protected against attacks from malicious customers, by allocating resources on demand for instance. Routing appliances **805** run as virtual machines in the system to provide functionalities such as routing, DNS, load balancing, console access, etc. When they are no longer needed, they are garbage collected to release any precious system resources that they are holding. The routing appliances **805** may be hosted by the routing server **410**.

The eth0 interface of a routing appliance **805** serves as the gateway for the guest virtual network and has the IP address of 10.1.1.1, which is configurable. The eth1 interface of the routing appliance **805** resides on the management network **315** and is used to configure the routing appliance. The eth2 interface is assigned a public IP address on the data network **310**.

As indicated in FIG. **8**A, VMs associated with customers **205***a* and **205***b* are segmented on the same physical network. In order for the VMs associated with a customer **205** to access the internet or to accept connections from the internet (such as ssh), a routing appliance may be started up for the VM. In the example of FIG. **8**A, customer **205***a* accesses virtual machines VM **505***a*, **505***b* and **505***d* through routing appliance **805***a* hosted on computing server **420***a*, while customer **205***b* accesses virtual machines VM **505***c*, **505***e* and **505***f* through routing appliance **805***b*. While physical resources such as network and physical server are shared, the networks of customers **205** are segmented and cannot see each other.

When a customer **205** starts a VM in a certain zone **110**, a management server **215** determines if a routing appliance **805** for that customer **205** is already running within that zone **110**. If it is not, the routing appliance **805** is started prior to the actual start of the VM. As the VM starts, the routing appliance **805** may then provide network functionalities such as DHCP, DNS, routing, load balancing, and firewall protection to the VM. After the last VM associated with customer **205** is stopped, the management server garbage **215** may garbage collect the routing appliances **805** after a defined interval. One routing appliance **805** may be needed per customer account per zone **110**.

In one embodiment, each customer **205** is assigned a guest virtual network in each zone **110**. A guest virtual network may be configured to any private address space, for example the Class A network in 10.0.0.0/8 private address space. The guest virtual network is an overlay network on top of the management network **315** and is managed by the multitenant hypervisor **510**.

A guest virtual network may be valid within one zone **110**. Therefore virtual machines in different zones **110** cannot communicate with each other using their IP addresses in the guest virtual network. Virtual machines in different zones **110** communicate with each other by routing through a public IP address.

A routing appliance **805** is associated with each guest virtual network. The routing appliance **805** automatically assigns an IP address for each virtual machine associated with the customer **205**, for example, in the 10.0.0.0/8 network. The

customer **205** may manually reconfigure virtual machines to assume different IP addresses as long as the customer **205** does not introduce IP address conflicts.

Source NAT is automatically configured in the routing appliance **805** to forward out-bound traffic for all virtual machines associated with the customer **205**. The customer **205** may configure port forwarding rules to direct inbound public traffic to the virtual machines associated with the customer **205**. A management server **215** programs the routing appliance **805** and the firewall **320** according to the port forwarding rules specified by the customer **205**. A customer **205** may also configure a software load balancer running on the routing appliance **805** to dispatch inbound traffic to multiple virtual machines associated with the customer **205** according to customer-specified load balancing rules.

The cloud infrastructure can support multiple guest virtual networks per customer **205**. The concept of routing appliances **805** as virtual machines may be generalized to include virtual machines with multiple virtual NIC interfaces and connected to multiple guest virtual networks. The virtual NIC interfaces are discussed further in conjunction with FIG. **8**B.

As shown in FIG. **8**A, although some of the physical resources are shared by the customers **205***a*, **205***b*, traffic between the two customers **205***a*, **205***b* and their virtual machines **505** is segmented using two separate routing appliances **805**, as are the individual virtual machines **505** assigned to each customer **205**.

The customer **205** can provide a functional specification for the virtual machine **505** (i.e., that the virtual machine **505** be capable of performing one or more specified computing tasks while meeting specified performance criteria) or the customer **205** can provide a resource specification for the virtual machine **505** (i.e., that the virtual machine **505** include specified computing resources such as hardware and/or software elements). The virtual machine **505** can also be configured according to any number of default specifications. Once the virtual machine **505** is configured, the customer **205** can access the virtual machine **505** over the network **230** and thereby interact with the virtual machine **505** to accomplish tasks as desired. For example, the customer **205** can utilize remote access software such as secure shell and/or virtual displays to control the virtual machine **505**.

FIG. **8**B shows additional detail for one embodiment of traffic routed between the different virtual machines **505***c*-**505***e* within computing server **420***b*, when the traffic is to/from two different customers **205***a*, **205***b*. Traffic from customer **205***a* goes through routing appliance **805***a*, when it meets the physical NIC of domain zero ("DOM 0") associated with the corresponding virtual machine (**505***d*), it goes through a separate bridge (1) reserved only for traffic from customer **205***a* before being routed to Virtual NIC2 for virtual machine **505***d*. In some embodiments of the invention, the domain zero is also the multitenant hypervisor **510**.

The agent running on the computing server **420**, on behalf of the management server **215** ordering the instantiation, sets up a number of virtual networking components that co-operate to achieve communication between the virtualized operating system and the hardware. The virtual NIC is an emulated network adapter that shuttles traffic back and forth between dom0 and VM **505**. The bridge is a virtual switch that shuttles traffic back and forth between two segments-in this case, the network adapter of the customer virtual machine and VLAN network adapter. The bridge may also comprise a VNIC in some embodiments. The VNIC is a pseudo-network adapter that tags and untags frames in the communication using a standard, for example the 802.1q trunking standard.

Similarly, traffic from customer **205***b* goes through routing device **805***b*, and when it meets the physical NIC of DOM 0, it goes instead through a separate bridge (2) for customer **205***b* traffic, before reaching virtual NIC1 or virtual NIC3 of virtual machines **505***c* and **505***e*, respectively. Note that even though customer **205***b* has two virtual machines (**505***c*, **505***e*) within the computing server **420***b*, it has only one bridge (2), as only one is needed for each customer **205***b*. Doing so allows traffic for the same customer (**205***b*) to be seen, but not traffic to/from other customers (e.g., **205***a*) on the same computing server **420***b*.

The cloud infrastructure combines physical host-based network virtualization and physical network/VLAN-based network virtualization. Each customer's virtual machine gets the illusion of participating in a physically distinct local area network, with the customer's other virtual machines. It is possible for example that both customer A's private network and customer B's private network is in the IP address space 10.1.1.0/24 but they never see each other's packets. It is possible that the networks addresses are not shared as well.

A prospective customer **205***x* may contact the administrator **210**, requesting resources from the cloud infrastructure. The administrator **210** registers a customer account in the name of customer **205***x*. A management server **215** reserves and assigns a unique VLAN ID Vx, for example within the 802.1q VLAN range (12-bit number totaling **4000** possible unique IDs) to the customer. If no unused VLAN IDs are found, the customer **205***x* is informed that it is not possible to start a virtual machine.

In some embodiments, this ID is stored in a database that the management server **215** uses. The customer **205***x* now starts a virtual machine within the cloud infrastructure and the management server **215** orders the instantiation of a virtual machine within one of the computing servers **420**.

Vy is then transmitted to the agent running on the computing server **420** in question, as part of the virtual machine instantiation procedure. The agent uses Vy to set up a tagged VLAN interface that will shuffle the correct traffic back and forth between the network and the virtual machine. In some embodiments, this setup communication happens through the management network **315**. The management network **315** shares the same physical network but is effectively segmented from other customers because it has a different (or no) tag.]

Traffic coming out of the virtual machines set up in this fashion will be tagged with the VLAN number as the packet travels through the multitenant hypervisor **510**; traffic coming into that interface tagged with Vy will be unwrapped from the tagged frame and delivered to the appropriate virtual machine based on the MAC address.

When a virtual machine associated with a customer actually starts on a particularly server **240**, the virtual NIC required to provide multi-tenancy is created on the server **240** and associated with the virtual machine to provide segmented network access. When the user VM is stopped, the virtual NIC is destroyed (i.e. garbage collected) and its resources returned to the server **240**.

In the embodiment of FIG. **8**B, for VM **505***c* and VM **505***e*, there's only one virtual NIC and bridge created because they belong to the same customer and the virtual machines are allowed to see each other's traffic. This makes the virtual NIC garbage collection more difficult as the agent cannot terminate the bridge until all virtual machines for that customer are stopped on that server **240**. Each bridge and virtual NIC created requires resources on the server **240** in terms of memory. The agent may create and garbage collect bridges and virtual NICs as needed.

FIG. **9** illustrates switching in the network architecture of the scalable cloud infrastructure, in accordance with one embodiment. For the sake of illustration, two pods each with one computing server **420**, one routing server **410** and one storage server and an MSC **120** with one management server **215**, one load balancer **605** and one storage **610** are displayed. The firewall **320** provides connection to the network **230** and is configured in routing mode. The firewall **320** forwards HTTP requests and API calls from the network **230** to a management server **215**. The public traffic, which may be routed on a VLAN, also passes through the firewall **320** en-route to the zone layer switch **305**. Additionally, in some embodiments, the firewalls **320** may route traffic on internal networks between pods **115**. In certain embodiments, the firewall **320** enables site-to-site VPN such that servers **240** and management servers **215** in different zones **110** can reach each other.

In the embodiment of FIG. **9**, the zone level switch **305** comprises two layer-3 switches L3 switches **910**. Additionally, redundant pairs of layer-2 switches L2 switches **905** are deployed in the pod layer switches **405**. In large deployments of pods **115** that include multiple racks, a second level of pod layer switch **405** may be deployed.

Virtual Machine Live Migration

In order to minimize any performance penalty resulting from virtual machines associated with a customer account being scattered across a number of pods and computing servers—referred to herein as "fragmentation"—customer virtual machines are preferably consolidated within one or more computing servers **420** of a pod **115**. Consolidation, also referred to herein as "defragmentation" consolidates a set of customer virtual machines of a given customer account with their associated system appliances to minimize cross computing server or pod traffic. Live migration facilitates this process. As computing resources are made available on a computing server **420** hosting one or more customer **205** virtual machines **505**, management server **215** may migrate one or more fragmented machines belonging to the customer **205** to computing server **420**, thereby defragmenting the customer account.

In embodiments within the scalable cloud architecture discussed herein, virtual machines **505** are typically consolidated on computing servers **420** operating the routing appliance **805** belonging to the customer **205**. While consolidating customer virtual machines **205** around routing appliances **805** within a single computing server **420** or pod **115** is preferred for customer **205** experience and performance reasons, virtual machines **505** are free to migrate anywhere resources are available. For instance, virtual machines **505** may undergo live migration before the shutdown of one or more computing servers **420** for maintenance, thus preventing any disruption of traffic for customer **205**.

FIG. **10** illustrates one embodiment of the elements used to manage live migration in a virtual computing environment. Management server cluster **120** includes management servers **215** and database **220** for storing customer **205**, administrator **210** and virtual machine **505** information. Management servers **215** manage database **220** and store information in a number of tables. FIG. **10** illustrates the database **220** including a state look up table ("LUT") **1010** and a transaction history **1015** used to store data associated with virtual machine **505** state management. Computing server **420** includes an agent **1005** application or API for transmitting information to and receiving commands from management servers **215**. In one embodiment, both agents **1005** report to management server **215***a*. Alternatively, agent **1005***a* reports to management server **215***a* and agent **1005***b* to management server **215***b*.

State LUT **1010** is a database **220** structure containing current states and possible next states for managed virtual machines **505**. Management servers **215** access state LUT **1010** to determine whether a desired state change is valid. Transaction history **1020** is a database **220** structure containing transactional history for migration events. Management servers **215** receive state and virtual machines **505** information from agents **1005** and update associated data in transaction history **1020**. Customer **205** and administrator **210** data and migration event requests are received at management servers **215** and stored in transactional history **1020**. Event requests may specify the migration of virtual machines **505** across computing servers **420**, or pods **115**. In some embodiments, virtual machines may be migrated across zones available to customer **205**. Additionally, management servers **215** may implement logic to defragment the virtual machine environment and issue migration events for a virtual machine **505** or number of.

FIG. **10** illustrates a shared database **220** in management server **220**. In other embodiments each management server **215** operates separate databases and forward entries to the management server **215** or cluster **120** receiving the migrated virtual machine **505**. Database **220** may also implement business logic associated with information entries such as determining the validity of a new entry or a desired action and notifying the management server **215** submitting the entry. Alternatively, management servers **215** may perform required business logic and simply access and update information in database **220**. State LUT **1010** and transaction history **1015** may be implemented as one or more tables in one or more databases **220** depending on architecture and equipment capability.

In some embodiments where management servers **215** share a common database **220**, agent **1005***b* communicates only with management server **215***b* as the current database **220** entries from management server **215***a* are still applicable. In some embodiments, management server **215***a* notifies agent **1005***b* to prepare for a migrating virtual machine **505** regardless of which management server **215** agent **1005***b* reports to. In embodiments where management servers **215** operate separate databases, management servers **215** may forward virtual machine information to or access virtual machine information on other management servers **215** or their databases. Thus, the agent **1005** receiving the migrated virtual machine updates **505** reports to a management server **215** with access to corresponding virtual machine information stored in its own database or shared database **220**.

Agent **1005** also interacts with and controls hypervisor **510** using a standard set of commands. Some examples of available commands are: Start a virtual machine stop a virtual machine, reboot a virtual machine, add or remove a virtual disk for a virtual machine, add or remove virtual network interfaces for a virtual machine, mount or dismount a virtual disk from the storage resource, and add or remove VLAN's from the physical network interfaces of the compute host.

In one embodiment, at least one agent **1005** runs on each computing server **420** and controls at least one hypervisor **510**. Alternatively, agent **1005** may operate a number of clustered hypervisors **510** on one or more computing servers **420** in a pod **115** or zone **115**. FIG. **10** illustrates an embodiment using one agent **1005** per computing server **420**. While only one hypervisor **510** is shown, a number of may reside on computing server **420** and communicate with agent **1005**. Referring to FIG. **10**, agent **1005** collects virtual machine

1035 information from hypervisor 510 and reports the information to management server cluster 120. Agent 1005 also receives commands from management servers 215 and communicates with hypervisor 510 to convert commands into virtual machine 505 actions.

Virtual NICs 1017 are emulated network adapters that shuttle network traffic back and forth between hypervisor 510 and virtual machines 505. In one embodiment, each customer 205 is assigned a virtual NIC 1017 at hypervisors 510 managing one or more of their virtual machines 505 and a routing appliance 805 (not shown) within zone 110. Routing appliance 805 communicates network traffic associated with customer 205 to the various hypervisors 510 operating assigned virtual NICs 1017 for the customer 205.

FIG. 10 additionally illustrates a simplified diagram of the live virtual machine migration process. In one embodiment, customer 205 operates virtual machines 505*a* and 505*x* associated with virtual NIC 1017. The customer's virtual machines reside on both pods 115*a* and 115*b*, respectively, and communicate through virtual NICs, 1017*a* and 117*b*, respectively to hypervisors, 510*a* and 510*b*, respectively. Hypervisors 510*a* and 510*b* communicate and receive customer 205 network traffic via routing appliance 805 (not shown). Management server 215*a* communicates with agent 1005*a* and 1005*b* via command path 1045. Agents 1005 control their respective hypervisors 510 during the live migration process. Specifically, agent 1005*a* instructs hypervisor 510*a* to migrate virtual machine 505*a* to computing server 420*b* and agent 1005*b* instructs hypervisor 510*b* to receive migrating virtual machine 505*a*.

To begin the migration of virtual machine 505*a*, management server 215*a* determines the pre-migration location 1030 of virtual machine 505*a* and the post-migration location 1035, illustrated as virtual machine 505*a*'. In one embodiment, virtual machine 505*x* also belongs to consumer 205 and management server 215*a* migrates virtual machine 505*a* during a defragmentation process. Database 220 contains pre-migration locations for virtual machines as their current physical location, such as computing server 420, pod 115, agent 1005, or hypervisor 510 addresses (e.g. an IP) depending on the embodiment. Post-migration locations are determined by the management server 215 according to the reason for migration. For example, during a computing server 420 shutdown, virtual machines 505 may be migrated to any server 420 or pod 115 having available resources as indicated in database 220. In a defragmentation process, as discussed in sever embodiments herein, management server 215 may determine a post-migration location from database 220 entries for allocated system appliances or other customer virtual machines 505. In one embodiment, as customer 205 already has a virtual NIC 1017*b* on destination hypervisor 510*b*, a new one need not be created. Alternatively where a virtual does not exists, management server 215*a* commands agent 1005*b* to allocate and create the virtual NIC 1017*b* network resource assigned to customer 205 on hypervisor 510*b* prior to migration.

Management server 215*a* determines whether the set of processing 525, networking 515 and storage 535 resources allocated to virtual machine 505*a* on computing server 420*a* is available on computing server 420*b* prior to the migration of virtual machine 505*a*. FIG. 11 as discussed herein embodies such a process carried out by management server 215*a*.

FIG. 11 is a flow chart illustrating one embodiment of management server logic for determining if a virtual machine can be migrated. The management server determines 1105 physical resources allocated the virtual machine within the first computing server and checks 1110 whether a corresponding set of physical resources are available within the second computing server. Responsive to the determination, virtual machine physical resources are allocated 1120 to the second computing server. Once the allocation 1120 process successfully completes, the virtual machine is migrated to the second computing server and physical resources are released 1130 from the first computing server. Optionally, if the second server does not have enough resources available, a different computing server or pod may be found 1115. For example, if a whole computing server 420 or pod 115 is taken offline for maintenance, a number of virtual machines 505 are migrated to other computing servers 420 or pods 115. During defragmentation, however, a number of algorithms may coordinate the live migration of virtual machines 505 based on network traffic between one or more virtual machines 505, a measure of fragmentation, or other rubrics.

Referring again to FIG. 10, management server 215*a* may determine the set of resources allocated to virtual machine 505*a* from database 220, agent 1005*a*, or combination of via command path 1045. Management server 215*a* determines whether the set of resources allocated to virtual machine 505*a* is available on computing server 420*b* in a similar fashion. Responsive to determining whether computing server 420*b* is capable of receiving migrating virtual machine 505*a*, management server 215 instructs agent 1005*b* to create virtual NIC 1017*a* on hypervisor 510*b*. However, as discussed previously, virtual NIC 1017*b* already exists for customer 205 and the network allocation process is skipped. Agent 1005*b* notifies management server 215*a* it is ready for migration via command path 1045. In some embodiments, agent 1005*b* may also return the hypervisor 510*b* or computing server 420*b* IP address for the post-migration location 1035. Alternatively, management server 215*a* maintains the IP address for computing server 420*b*, hypervisor 510*b* or both in database 220.

In one embodiment, management server 215*a* issues the migration command to agent 1005*a* with the destination hypervisor 510*b* or computing server 420*b* IP address. Agent 1005*a* subsequently instructs hypervisor 510*a* to migrate virtual machine 505*a* to hypervisor 510*b*. Hypervisor 510*b* receives migration data from hypervisor 510*a* over migration path 1040 and constructs the migrating virtual machine 505*a* in post migration location 1035 as virtual machine 505*a*'. Storage 535 resources in the form of disk snapshots, disk images, OS snapshots and OS images may facilitate the construction of migrated virtual machines. In other embodiments, hypervisor 510*a* transfers virtual machines 505 storage volumes directly without an intermediate step. In live migrations, hypervisors 510 are capable of migrating virtual machine 505*a* complete with memory and instruction counters to prevent process interruption. Thus, once all memory and instruction counters along with allocated processing 525, networking 515 and storage 535 resources are migrated to virtual machine 505*a*' it begins functioning as virtual machine 505*a* did prior to migration. Agent 1005*a* notifies management server 215 when the process is complete and stops virtual machine 505*a* to prevent multiple instances of the migrated virtual machine 505*a*. In some embodiments, the notification is a virtual machine 505 state and management server 215*a* determines from the state and information in database 220 whether the migration was successful. Management server 215*a* may also request an update from agent 1005*b* to determine the state of virtual machine 505*a*'.

At this point, the one or more agent 1005 have indicated whether the migration of virtual machine 505*a* to computing server 420*b* has either succeeded or failed at this point. In one embodiment, successful migration results in virtual machine

505*a* entering a stopped state and virtual machine **505***a*' running on computing server **420***b*. If migration is unsuccessful, management server **215***a* conducts further state inquiry at agents **1005**. In some embodiments, once management server **215***a* determines migration was successful, unused customer **205** resources associated with virtual machine **505***a* are released on computing server **420***a*. Additionally, if management server **215** determines that customer **205** does not operate any additional virtual machines on hypervisor **510***a*, virtual NIC **1017***a* and associated resources are released on computing server **420***a*.

FIG. **12**A illustrates one embodiment of customer network defragmentation. Customer **205***a* virtual machines **1220** are spread across pods **115***a* and **115***b*. Customer **205***b* operates virtual machines **1225** on pod **115***b*. Each customer **205** has a routing domain **1205** to handle network traffic for their virtual machines **505**. Routing domain **1205***a* resides on computing server **420***a* and handles traffic for customer **205***a* virtual machines **505***a-c*. Customer **205***a* also requires a phantom routing domain **1210** on computing server **420***b* for virtual machine **505***c* on computing server **420***b*. In some embodiments, routing domains **1205** are the primary routing appliance while secondary phantom domains **1210** facilitate cross pod **115** routing as necessary. Phantom routing domain **1210** communicates network traffic between routing domain **1205***a* and virtual machine **505***c* to establish the VLAN for customer **205***a*.

In one embodiment, a management server **215** determines the defragmentation of the virtual network for customer **205***a* according to the defragmentation process illustrated in FIG. **12**B. Management server **215** determines **1230** the locations of customer virtual machines and supporting system machines. In some embodiments, management server locates all phantom **1210** and routing **1205** domains for each customer and determines **1235** a measure of fragmentation for each network. Management server **215** may then determine **1240** the available resources **1215** on the computing server **420** hosting the customer routing domain **1205** and within the pod **115**. If resources are available, management server **215** determines **1245** whether the migration of one or more virtual machines is advantageous to the customer network. This process may comprise a number of algorithms that consider network activity between virtual machines **505** within phantom domains **1210** and between phantom domains **1210** and the customer routing domain **1205**. In some instances, for example, two virtual machines **505** on a phantom domain **1210** may utilize significant network resources locally, thus it would more advantageous to migrate another virtual machine **505** consuming a greater amount of routing domain **1205** traffic. If management server **215** determines that no optimization can be made, the defragmentation process ends **1255**. Otherwise, management server **215** coordinates the migration **1250** of one or more virtual machines to defragment the customer **205** network.

Referring again to the embodiment of FIG. **12**A, the management server **215** determines the migration of virtual machine **505***c* from location **1030** to **1035** as advantageous to customer **205***a*. Management server **215** coordinates the migration of virtual machine **505***c* to available resources **1215** along migration path **1040** as discussed previously. Once virtual machine **505***c* has migrated to post migration location **1035** and all customer **205***a* virtual machines **1220** are running on computing server **420***a*, defragmentation is complete for customer **205***a*. In some embodiments, management server **215** terminates phantom domain **1210** to release resources on computing server **420***b* as the domain no longer communicates network traffic for customer **205***a* virtual machines **1220**.

The foregoing description of the embodiments of the invention has been presented for the purpose of illustration; it is not intended to be exhaustive or to limit the invention to the precise forms disclosed. Persons skilled in the relevant art can appreciate that many modifications and variations are possible in light of the above disclosure.

Some portions of this description describe the embodiments of the invention in terms of algorithms and symbolic representations of operations on information. These algorithmic descriptions and representations are commonly used by those skilled in the data processing arts to convey the substance of their work effectively to others skilled in the art. These operations, while described functionally, computationally, or logically, are understood to be implemented by computer programs or equivalent electrical circuits, microcode, or the like. Furthermore, it has also proven convenient at times, to refer to these arrangements of operations as modules, without loss of generality. The described operations and their associated modules may be embodied in software, firmware, hardware, or any combinations thereof.

Any of the steps, operations, or processes described herein may be performed or implemented with one or more hardware or software modules, alone or in combination with other devices. In one embodiment, a software module is implemented with a computer program product comprising computer program code stored on a non-transitory, tangible computer readable storage medium, which is configured to be executed by a computer system for performing any or all of the steps, operations, or processes described. A computer system is understood to include one or more computers, each computer including one or more hardware-based processors, primary memory devices (e.g., RAM, ROM), secondary storage devices (e.g., hard discs or solid state memory), and networking devices (e.g., networking interface cards). The computers in a computer system can be interconnected by wired medium (e.g. Ethernet, fiber optic), or wireless medium (e.g., radio-based networks, such as 802.11, 802.16), or combination thereof.

Embodiments of the invention may also relate to an apparatus for performing the operations herein. This apparatus may be specially constructed for the required purposes, and/or it may comprise a general-purpose computing device selectively activated or reconfigured by a computer program stored in the computer.

Embodiments of the invention may also relate to a product that is produced by a computing process described herein. Such a product may comprise information resulting from a computing process, where the information is stored on a non-transitory, tangible computer readable storage medium and may include any embodiment of a computer program product or other data combination described herein.

Finally, the language used in the specification has been principally selected for readability and instructional purposes, and it may not have been selected to delineate or circumscribe the inventive subject matter. It is therefore intended that the scope of the invention be limited not by this detailed description, but rather by any claims that issue on an application based hereon. Accordingly, the disclosure of the embodiments of the invention is intended to be illustrative, but not limiting, of the scope of the invention, which is set forth in the following claims.

We claim:

1. A method for defragmenting a virtual machine network of a customer, the virtual machine network comprising a

plurality of virtual machines associated with the customer, the virtual machine network spanning one or more pods, wherein each pod comprises a set of physical resources in a zone, the physical resources comprising physical, storage, and network resources, the method comprising:

identifying first virtual machines of the customer in a first pod operating a first portion of the virtual machine network of the customer;

identifying additional virtual machines associated with the customer and outside the first portion of the virtual machine network;

determining a measure of network fragmentation of the customer network, the measure indicating a degree to which virtual machines of the customer are distributed across multiple pods;

determining available resources in the first pod for migrating one or more of the additional virtual machines to the first pod, and whether the measure of network fragmentation indicates an advantage to the customer network by migrating one or more of the additional virtual machines to the first pod to reduce the network fragmentation; and

based on the available resources and the measure of network fragmentation indicating the advantage to the customer network, migrating one or more of the additional virtual machines into the first portion of the customer network on the first pod,

wherein the virtual machines outside the first portion of the virtual machine network operate on one or more secondary system routing appliances in a second portion of the virtual machine network, and wherein determining the measure of network fragmentation includes considering volume of network traffic between the first and second portions of the virtual machine network.

2. A method according to claim **1**, further including:

determining whether resources allocated to the one or more additional virtual machines in a second pod are less than or equal to the available resources in the first pod;

in response to determining that the allocated resources are less than or equal to the available resources in the first pod, reallocating the migrated virtual machines from the second pod to the first pod by allocating a set of corresponding physical resources in the first pod to the migrated virtual machines; and

releasing the allocated resources within the second pod.

3. The method of claim **2**, wherein allocating the set of corresponding physical resources further comprises a transfer of physical storage data from the second pod to the first pod, and wherein the physical storage data includes one or more disk volumes for the migrated virtual machines.

4. The method of claim **2**, wherein allocating the set of corresponding physical resources further comprises memory and processing counters, and further comprising running a migrated virtual machine from a previous processing counter.

5. The method of claim **2**, wherein reallocating the migrated virtual machines further comprises routing network traffic for the migrated virtual machines from the second pod to the first pod.

6. The method of claim **1**, wherein the first portion of the virtual machine network comprises a primary system routing appliance allocated to the customer.

7. The method of claim **1**, wherein the measure of network fragmentation is determined from an allocation of primary and secondary system routing appliances to the virtual machine network.

8. The method of claim **1**, wherein the zone comprises the first pod and a plurality of additional pods.

9. The method of claim **1**, wherein the first portion of the virtual machine network and the primary routing appliance reside in the first pod, and the second portion of the virtual machine network and the one or more secondary system routing appliances reside in a second pod distinct from the first pod.

10. The method of claim **9**, wherein:

the customer is a first one of a plurality of customers each having a respective customer routing domain to handle network traffic for respective virtual machine networks of the customers;

a first customer routing domain resides on a first computing server in the first pod and handles traffic for the first customer within the first portion of the virtual machine network of the first customer;

a second customer routing domain resides on a second computing server in the second pod and handles traffic for a second customer within a virtual machine network of the second customer located within the second pod;

a phantom routing domain resides on the second computing server for handling traffic in the second portion of the virtual machine network of the first customer and for communicating network traffic between the first customer routing domain and the second portion of the virtual machine network of the first customer.

11. The method of claim **1**, wherein the virtual machines outside the first portion of the virtual machine network include a pair of virtual machines and another virtual machine, the pair of virtual machines using local network resources of the second portion of the customer network, and further including selecting the other virtual machine to be migrated based on its use of a greater amount of traffic of the first portion of the customer network than the pair of virtual machines.

12. A non-transitory computer readable storage medium storing instructions executable by a computer system, the instructions when executed cause the computer system to perform a method for defragmenting a virtual machine network of a customer, the virtual machine network comprising a plurality of virtual machines associated with the customer, the virtual machine network spanning one or more pods, wherein each pod comprises a set of physical resources in a zone, the physical resources comprising physical, storage, and network resources, the method including: identifying first virtual machines of the customer in a first pod operating a first portion of the virtual machine network of the customer; identifying additional virtual machines associated with the customer and outside the first portion of the virtual machine network; determining a measure of network fragmentation of the customer network, the measure indicating a degree to which virtual machines of the customer are distributed across multiple pods; determining available resources in the first pod for migrating one or more of the additional virtual machines to the first pod, and whether the measure of network fragmentation indicates an advantage to the customer network by migrating one or more of the additional virtual machines to the first pod to reduce network fragmentation; and based on the available resources and the measure of network fragmentation indicating the advantage to the customer network, migrating one or more of the additional virtual machines into the first portion of the customer network on the first pod, wherein the virtual machines outside the first portion of the virtual machine network operate on one or more secondary system routing appliances in a second portion of the virtual machine network, and wherein determining the measure of

network fragmentation includes considering volume of network traffic between the first and second portions of the virtual machine network.

13. A non-transitory computer readable storage medium according to claim **12**, wherein the instructions when executed cause the one or more processors to: determine whether resources allocated to the one or more additional virtual machines in a second pod are less than or equal to the available resources in the first pod.

14. The non-transitory computer readable storage medium of claim **13**, wherein the instructions to allocate the migrated virtual machines further cause the one or more processors to route network traffic for the migrated virtual machines from the second pod to the first pod.

15. The non-transitory computer readable storage medium of claim **12**, wherein the instructions further cause the one or more processors to determine the measure of network fragmentation from an allocation of primary and secondary system routing appliances to the virtual machine network.

16. The non-transitory computer readable storage medium of claim **12**, wherein the first portion of the virtual machine network and the primary routing appliance reside in the first pod, and the second portion of the virtual machine network and the one or more secondary system routing appliances reside in a second pod distinct from the first pod.

17. The non-transitory computer readable storage medium of claim **12**, wherein: the customer is a first one of a plurality of customers each having a respective customer routing domain to handle network traffic for respective virtual machine networks of the customers; a first customer routing domain resides on a first computing server in the first pod and handles traffic for the first customer within the first portion of the virtual machine network of the first customer; a second customer routing domain resides on a second computing server in the second pod and handles traffic for a second customer within a virtual machine network of the second customer located within the second pod; a phantom routing domain resides on the second computing server for handling traffic in the second portion of the virtual machine network of the first customer and for communicating network traffic between the first customer routing domain and the second portion of the virtual machine network of the first customer.

18. The non-transitory computer readable storage medium of claim **12**, wherein the virtual machines outside the first portion of the virtual machine network include a pair of virtual machines and another virtual machine, the pair of virtual machines using local network resources of the second portion of the customer network, and further including selecting the other virtual machine to be migrated based on its use of a greater amount of traffic of the first portion of the customer network than the pair of virtual machines.

* * * * *