US009733973B2

(12) **United States Patent**
Prasad et al.

(10) **Patent No.: US 9,733,973 B2**
(45) **Date of Patent: Aug. 15, 2017**

(54) **AUTOMATICALLY DETERMINING SENSOR LOCATION IN A VIRTUALIZED COMPUTING ENVIRONMENT**

(71) Applicant: **Cisco Technology, Inc.**, San Jose, CA (US)

(72) Inventors: **Rohit C. Prasad**, Sunnyvale, CA (US); **Shashidhar R. Gandham**, Fremont, CA (US); **Navindra Yadav**, Cupertino, CA (US); **Khawar Deen**, Sunnyvale, CA (US); **Shih-Chun Chang**, San Jose, CA (US); **Ashutosh Kulshreshtha**, San Jose, CA (US); **Anubhav Gupta**, Sunnyvale, CA (US)

(73) Assignee: **Cisco Technology, Inc.**, San Jose, CA (US)

(*) Notice: Subject to any disclaimer, the term of this patent is extended or adjusted under 35 U.S.C. 154(b) by 0 days.

(21) Appl. No.: **14/855,811**

(22) Filed: **Sep. 16, 2015**

(65) **Prior Publication Data**

US 2017/0075710 A1 Mar. 16, 2017

(51) **Int. Cl.**
G06F 9/455 (2006.01)
H04L 12/26 (2006.01)

(52) **U.S. Cl.**
CPC ***G06F 9/45558*** (2013.01); ***H04L 43/12*** (2013.01); *G06F 2009/4557* (2013.01); *G06F 2009/45591* (2013.01); *G06F 2009/45595* (2013.01)

(58) **Field of Classification Search**
None
See application file for complete search history.

(56) **References Cited**

U.S. PATENT DOCUMENTS

6,772,099 B2 8/2004 Merkin et al.
7,277,414 B2 * 10/2007 Younis G01D 9/005 370/311
7,917,333 B2 3/2011 Grichnik et al.
7,937,167 B1 * 5/2011 Mesarina H04W 8/186 340/870.11
8,462,697 B2 6/2013 Park et al.
(Continued)

OTHER PUBLICATIONS

Nene et al, UREA: Uncovered Region Exploration Algorithm for Reorganization of Mobile Sensor Nodes to Maximize Coverage, 2010, IEEE, pp. 1-6.*

Primary Examiner — Abu Ghaffari
(74) *Attorney, Agent, or Firm* — Edell, Shapiro & Finnan, LLC

(57) **ABSTRACT**

A virtualized computing system including software sensors captures network data from one or more traffic flows the sensors. The captured network data from a given sensor indicates one or more traffic flows detected by the given sensor. The received captured network data is analyzed to identify, for each respective sensor, a first group of sensors, a second group of sensors, and a third group of sensors. All traffic flows observed by the first group of sensors are also observed by the second group of sensors. All traffic flows observed by the second group of sensors are also observed by the third group of sensors. A location of each respective sensor relative to other sensors within the virtualized computing system is determined based upon whether the respective sensor belongs to the first group of sensors, the second group of sensors, or the third group of sensors.

17 Claims, 9 Drawing Sheets

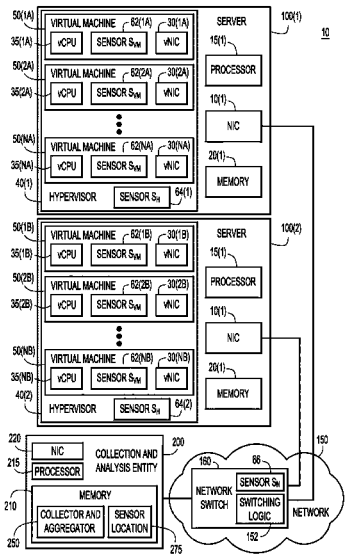

(56) **References Cited**

U.S. PATENT DOCUMENTS

8,572,155	B2	10/2013	Yanovich et al.	
8,830,230	B2	9/2014	Bai et al.	
9,438,634	B1 *	9/2016	Ross	H04L 63/20
2006/0095223	A1 *	5/2006	Gordon	G01N 29/07 702/116
2009/0055691	A1 *	2/2009	Ouksel	G01D 21/00 714/48
2010/0242045	A1 *	9/2010	Swamy	G06F 9/455 718/104
2012/0233608	A1 *	9/2012	Toeroe	G06F 9/45558 718/1
2012/0254993	A1 *	10/2012	Sallam	G06F 21/53 726/22
2012/0304172	A1 *	11/2012	Greifeneder	G06F 9/45504 718/1
2012/0331135	A1 *	12/2012	Alon	H04L 41/044 709/224
2013/0083806	A1 *	4/2013	Suarez Fuentes	H04L 41/0893 370/465
2013/0090904	A1 *	4/2013	Gupta	G08G 1/0108 703/6
2014/0013339	A1	1/2014	Lee et al.	
2014/0068069	A1 *	3/2014	Bansal	H04L 43/022 709/224
2014/0080528	A1	3/2014	Lim et al.	
2014/0149060	A1 *	5/2014	Meduna	G06F 1/3206 702/94
2014/0330827	A1 *	11/2014	Wu	G06F 17/30598 707/737
2014/0359552	A1 *	12/2014	Misra	H04L 67/12 717/100
2014/0372348	A1 *	12/2014	Lehmann	G06K 9/6265 706/12

* cited by examiner

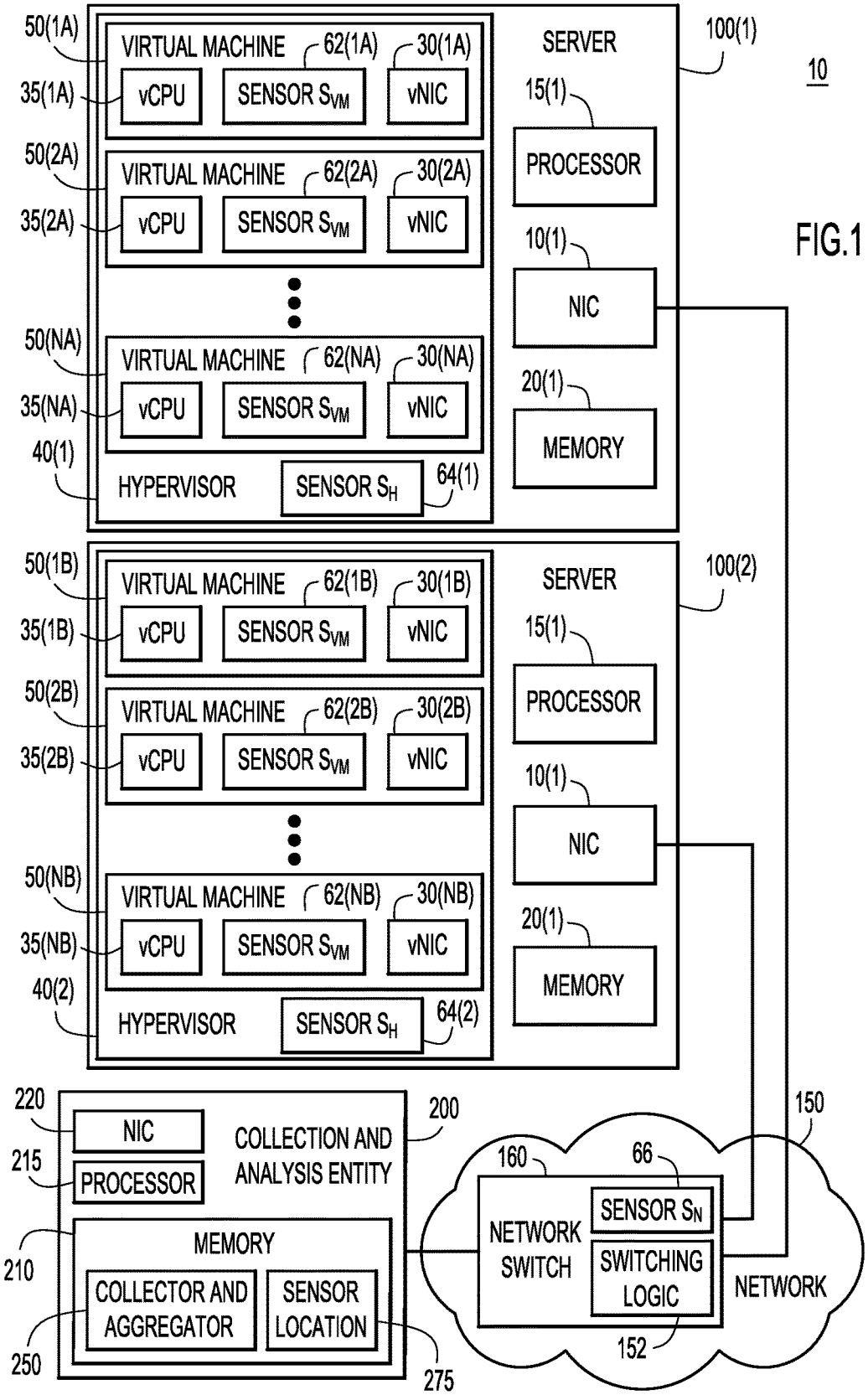
50(1A)
VIRTUAL MACHINE
62(1A)
30(1A)
35(1A)
vCPU
SENSOR S_{VM}
vNIC
50(2A)
VIRTUAL MACHINE
62(2A)
30(2A)
35(2A)
vCPU
SENSOR S_{VM}
vNIC
50(NA)
VIRTUAL MACHINE
62(NA)
30(NA)
35(NA)
vCPU
SENSOR S_{VM}
vNIC
40(1)
HYPERVISOR
SENSOR S_H
64(1)
SERVER
100(1)
10
15(1)
PROCESSOR
10(1)
NIC
20(1)
MEMORY
50(1B)
VIRTUAL MACHINE
62(1B)
30(1B)
35(1B)
vCPU
SENSOR S_{VM}
vNIC
50(2B)
VIRTUAL MACHINE
62(2B)
30(2B)
35(2B)
vCPU
SENSOR S_{VM}
vNIC
50(NB)
VIRTUAL MACHINE
62(NB)
30(NB)
35(NB)
vCPU
SENSOR S_{VM}
vNIC
40(2)
HYPERVISOR
SENSOR S_H
64(2)
SERVER
100(2)
15(1)
PROCESSOR
10(1)
NIC
20(1)
MEMORY
220
NIC
215
PROCESSOR
COLLECTION AND ANALYSIS ENTITY
200
210
MEMORY
COLLECTOR AND AGGREGATOR
SENSOR LOCATION
250
275
150
160
66
NETWORK SWITCH
SENSOR S_N
SWITCHING LOGIC
152
NETWORK

FIG.1

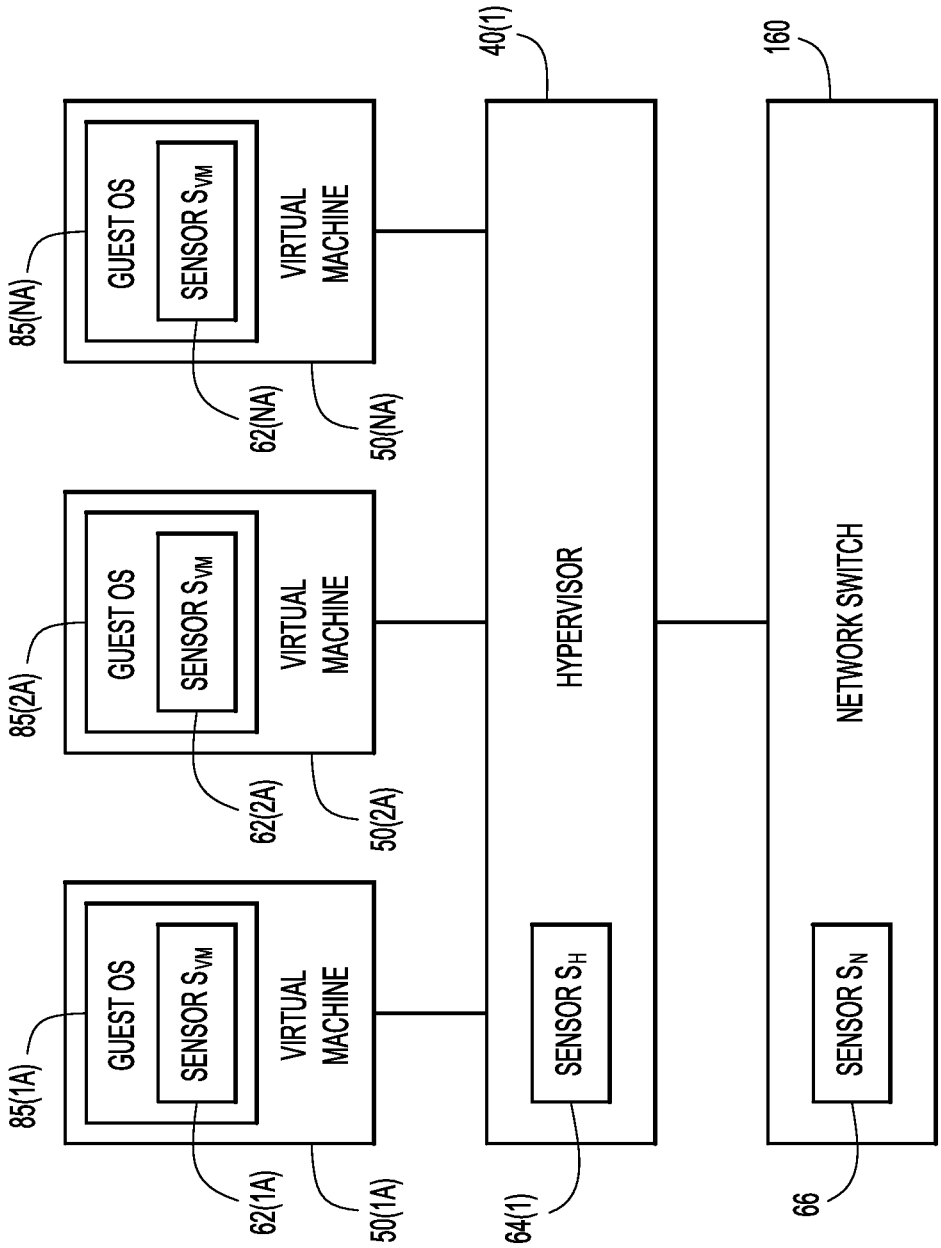
85(1A)
GUEST OS
SENSOR S_{VM}
VIRTUAL MACHINE
62(1A)
50(1A)
85(2A)
GUEST OS
SENSOR S_{VM}
VIRTUAL MACHINE
62(2A)
50(2A)
85(NA)
GUEST OS
SENSOR S_{VM}
VIRTUAL MACHINE
62(NA)
50(NA)
40(1)
HYPERVISOR
SENSOR S_H
64(1)
160
NETWORK SWITCH
SENSOR S_N
66

FIG.2

FLOW	SENSOR EMBEDDED IN VIRTUAL MACHINE (SENSOR S_{VM})	SENSOR EMBEDDED IN HYPERVISOR (SENSOR S_H)	SENSOR EMBEDDED IN NETWORK ELEMENT (SENSOR S_N)
F1 (STARTS AT S_{VM})	F1	F1	F1
F2 (STARTS AT S_H)	-	F2	F2
F3 (STARTS AT S_N)	-	-	F3

FIG.3A

	TUPLES	FRONT SENSORS (INTERSECTION OF SECOND ELEMENTS)	UNION OF SECOND ELEMENTS	REAR SENSORS (UNION-INTERSECTION OF SECOND ELEMENTS)
SENSOR S_{VM}	$\{S_{VM}, (S_H, S_N)\}$	(S_H, S_N)	(S_H, S_N)	$\{\}$
SENSOR S_H	$\{S_H, (S_{VM}, S_N)\}$ $\{S_H, (S_N)\}$	(S_N)	(S_{VM}, S_N)	S_{VM}
SENSOR S_N	$\{S_N, (S_{VM}, S_H)\}$ $\{S_N, (S_H)\}$ $\{S_N, ()\}$	$\{\}$	(S_{VM}, S_H)	(S_{VM}, S_H)

FIG.3B

FLOW	SENSOR EMBEDDED IN FIRST LEVEL (SENSOR S_1)	SENSOR EMBEDDED IN SECOND LEVEL (SENSOR S_2)	SENSOR EMBEDDED IN THIRD LEVEL (SENSOR S_3)	SENSOR EMBEDDED IN FOURTH LEVEL (SENSOR S_4)
F1 (STARTS AT S_1)	F1	F1	F1	F1
F2 (STARTS AT S_2)	-	F2	F2	F2
F3 (STARTS AT S_3)	-	-	F3	F3
F4 (STARTS AT S_4)	-	-	-	F4

FIG.4A

	TUPLES	FRONT SENSORS (INTERSECTION OF SECOND ELEMENTS)	UNION OF SECOND ELEMENTS	REAR SENSORS (UNION-INTERSECTION OF SECOND ELEMENTS)
SENSOR S_1	$\{S_1, (S_2, S_3, S_4)\}$	(S_2, S_3, S_4)	(S_2, S_3, S_4)	$()$
SENSOR S_2	$\{S_2, (S_1, S_3, S_4)\}$ $\{S_2, (S_3, S_4)\}$	(S_3, S_4)	(S_1, S_3, S_4)	(S_1)
SENSOR S_3	$\{S_3, (S_1, S_2, S_4)\}$ $\{S_3, (S_2, S_4)\}$ $\{S_3\ (S_4)\}$	(S_4)	(S_1, S_2, S_4)	(S_1, S_2)
SENSOR S_4	$\{S_4, (S_1, S_2, S_3)\}$ $\{S_4, (S_2, S_3)\}$ $\{S_4\ (S_3)\}$ $\{S_4 ()\}$	$()$	(S_1, S_2, S_3)	(S_1, S_2, S_N)

FIG.4B

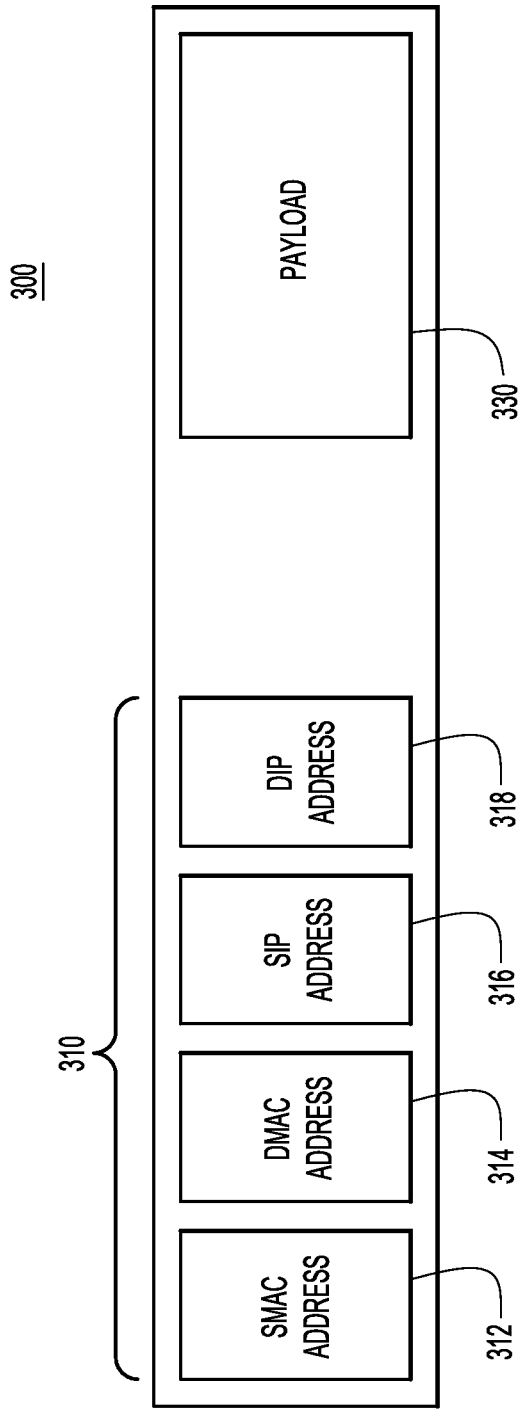
300
310
SMAC ADDRESS
DMAC ADDRESS
SIP ADDRESS
DIP ADDRESS
PAYLOAD
312
314
316
318
330

FIG.5

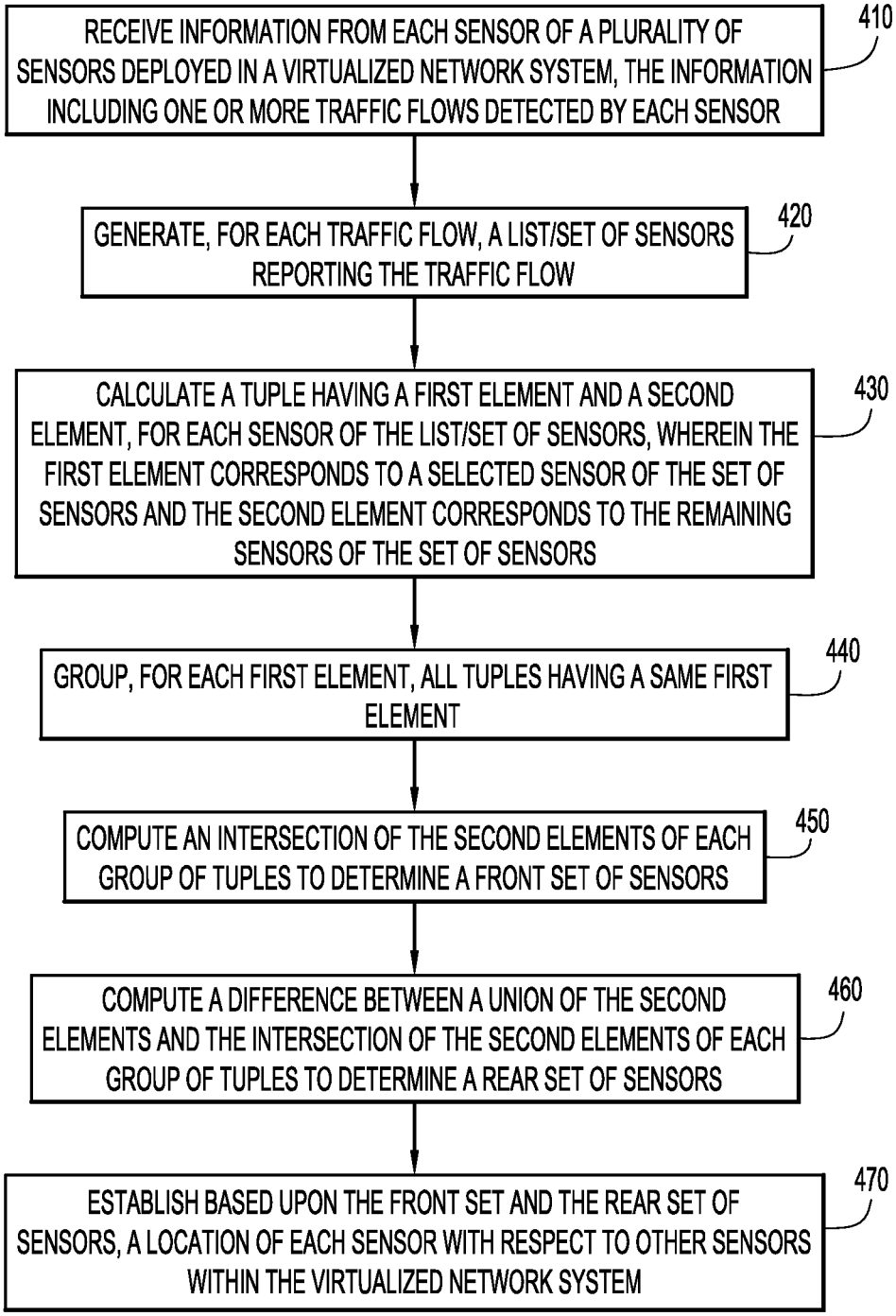
RECEIVE INFORMATION FROM EACH SENSOR OF A PLURALITY OF SENSORS DEPLOYED IN A VIRTUALIZED NETWORK SYSTEM, THE INFORMATION INCLUDING ONE OR MORE TRAFFIC FLOWS DETECTED BY EACH SENSOR
410
GENERATE, FOR EACH TRAFFIC FLOW, A LIST/SET OF SENSORS REPORTING THE TRAFFIC FLOW
420
CALCULATE A TUPLE HAVING A FIRST ELEMENT AND A SECOND ELEMENT, FOR EACH SENSOR OF THE LIST/SET OF SENSORS, WHEREIN THE FIRST ELEMENT CORRESPONDS TO A SELECTED SENSOR OF THE SET OF SENSORS AND THE SECOND ELEMENT CORRESPONDS TO THE REMAINING SENSORS OF THE SET OF SENSORS
430
GROUP, FOR EACH FIRST ELEMENT, ALL TUPLES HAVING A SAME FIRST ELEMENT
440
COMPUTE AN INTERSECTION OF THE SECOND ELEMENTS OF EACH GROUP OF TUPLES TO DETERMINE A FRONT SET OF SENSORS
450
COMPUTE A DIFFERENCE BETWEEN A UNION OF THE SECOND ELEMENTS AND THE INTERSECTION OF THE SECOND ELEMENTS OF EACH GROUP OF TUPLES TO DETERMINE A REAR SET OF SENSORS
460
ESTABLISH BASED UPON THE FRONT SET AND THE REAR SET OF SENSORS, A LOCATION OF EACH SENSOR WITH RESPECT TO OTHER SENSORS WITHIN THE VIRTUALIZED NETWORK SYSTEM
470

FIG.6

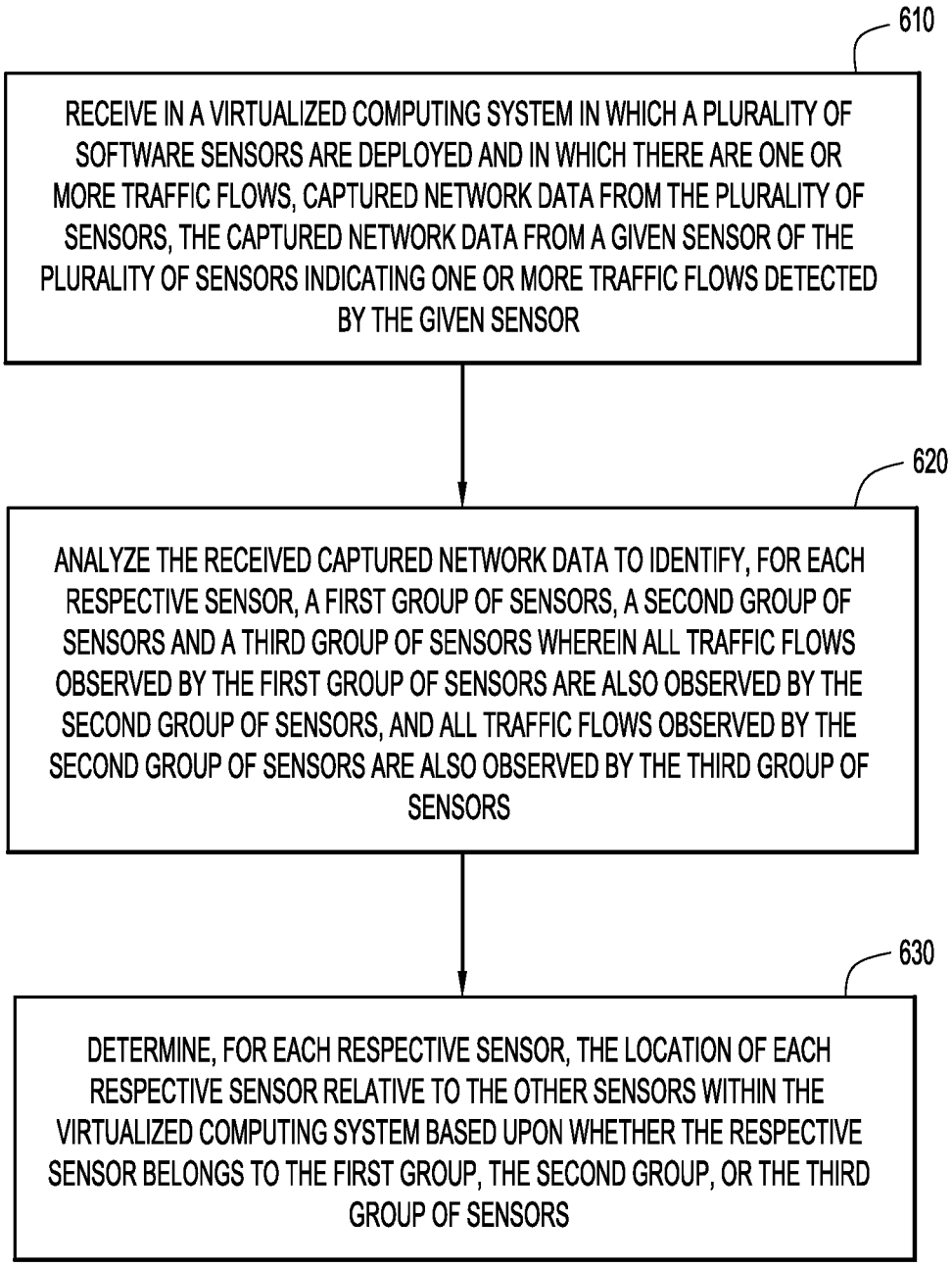
610
RECEIVE IN A VIRTUALIZED COMPUTING SYSTEM IN WHICH A PLURALITY OF SOFTWARE SENSORS ARE DEPLOYED AND IN WHICH THERE ARE ONE OR MORE TRAFFIC FLOWS, CAPTURED NETWORK DATA FROM THE PLURALITY OF SENSORS, THE CAPTURED NETWORK DATA FROM A GIVEN SENSOR OF THE PLURALITY OF SENSORS INDICATING ONE OR MORE TRAFFIC FLOWS DETECTED BY THE GIVEN SENSOR
620
ANALYZE THE RECEIVED CAPTURED NETWORK DATA TO IDENTIFY, FOR EACH RESPECTIVE SENSOR, A FIRST GROUP OF SENSORS, A SECOND GROUP OF SENSORS AND A THIRD GROUP OF SENSORS WHEREIN ALL TRAFFIC FLOWS OBSERVED BY THE FIRST GROUP OF SENSORS ARE ALSO OBSERVED BY THE SECOND GROUP OF SENSORS, AND ALL TRAFFIC FLOWS OBSERVED BY THE SECOND GROUP OF SENSORS ARE ALSO OBSERVED BY THE THIRD GROUP OF SENSORS
630
DETERMINE, FOR EACH RESPECTIVE SENSOR, THE LOCATION OF EACH RESPECTIVE SENSOR RELATIVE TO THE OTHER SENSORS WITHIN THE VIRTUALIZED COMPUTING SYSTEM BASED UPON WHETHER THE RESPECTIVE SENSOR BELONGS TO THE FIRST GROUP, THE SECOND GROUP, OR THE THIRD GROUP OF SENSORS

FIG.7

AUTOMATICALLY DETERMINING SENSOR LOCATION IN A VIRTUALIZED COMPUTING ENVIRONMENT

TECHNICAL FIELD

The present disclosure relates to determining the location of sensors in a network, and in particular, to determining the location of sensors relative to other sensors as well as the environment in which the sensors are located, without additional configuration of the system.

BACKGROUND

A software sensor can be deployed on a virtual machine, on a hypervisor managing a plurality of virtual machines, or within a physical switch (e.g., a switching Application Specific Integrated Circuit (ASIC) or a router).

The sensor reads a configuration file, e.g., a file manually created and updated by an administrator, in order to determine the location at which the sensor has been deployed, e.g., whether the sensor is located on a virtual machine, a hypervisor, or a physical switch, and also, to determine the hypervisor (or physical machine's name and Internet Protocol (IP) address) in case the sensor is located inside a virtual machine. However, use of a configuration file to determine the location of a sensor requires updating the configuration file each time that a new sensor is deployed or when an existing sensor migrates to a new location. Alternatively, the hypervisor environment may be queried using hypervisor-specific Application Programming Interfaces (APIs) and management interfaces provided by various hypervisor environments, e.g., Xen®, Vmware®, KVM®, etc., to determine sensor placement (in terms of its relative placement, and to determine the hypervisor's IP address if the sensor is contained inside a virtual machine). However, both of these approaches are manually driven and time-consuming processes. In addition, these processes are also error prone, especially when a virtual machine containing a sensor is moved to a different machine (or different hypervisor).

BRIEF DESCRIPTION OF THE DRAWINGS

FIG. **1** is a diagram of a virtualized network system in which sensors are deployed, according to an example embodiment.

FIG. **2** is another diagram of the virtualized network system, showing a hierarchy of deployed sensors, according to an example embodiment.

FIG. **3**A is a table showing traffic flows reported by sensors, according to an example embodiment.

FIG. **3**B is a table illustrating computations for determining a location of a respective sensor, relative to other sensors, according to an example embodiment.

FIG. **4**A is another example of a table showing traffic flows reported by sensors, according to an example embodiment.

FIG. **4**B is another example of a table illustrating computations for determining a location of a respective sensor, relative to other sensors, according to an example embodiment.

FIG. **5** is a block diagram of components of a packet, according to an example embodiment.

FIG. **6** shows a flow chart for determining sensor location, according to an example embodiment.

FIG. **7** illustrates another flow chart, similar to FIG. **6**, for determining sensor location, according to an example embodiment.

DESCRIPTION OF EXAMPLE EMBODIMENTS

Overview

Techniques are provided for determining location of a sensor relative to other sensors in a virtualized computing system. In a virtualized computing system in which a plurality of software sensors are deployed and in which there are one or more traffic flows, captured network data is received from the plurality of sensors, the captured network data from a given sensor of the plurality of sensors indicating one or more traffic flows detected by the given sensor. The received captured network data is analyzed to identify, for each respective sensor, a first group of sensors, a second group of sensors, and a third group of sensors, wherein all traffic flows observed by the first group of sensors are also observed by the second group of sensors, and all traffic flows observed by the second group of sensors are also observed by the third group of sensors. For each respective sensor, a location of the sensor relative to other sensors within the virtualized computing system is determined based upon whether the sensor belongs to the first group of sensors, the second group of sensors, or the third group of sensors. The environment in which the sensor is located, e.g., whether the sensor is on a virtual machine, a hypervisor, or networking switch, may also be determined.

Example Embodiments

Presented herein are techniques for automatically determining the location of sensors deployed in a large scale virtualized computing environment, based upon information collected from packets and/or traffic flows (including control flows), observed by the sensors. The packets of traffic that are observed for purposes of the techniques presented herein do not need to be of any special form or type.

Virtualization enables improved efficiency with regard to utilization of computing resources. For example, computing resources of a physical server may be distributed among a plurality of virtual machines with the same or different operating systems. Virtual machines may be instantiated, migrated, or removed in response to changing computing demands.

In a datacenter or other large computing deployment, there may be millions of live sensors distributed throughout the network, reporting information associated with traffic flows/packets, e.g., as part of control flows, to a collection and analysis entity. The collection and analysis entity may perform a number of processing activities on the received data ranging from network diagnostics to security-related operations. In general, such applications need to know where the sensor is located, e.g., whether the sensor is deployed on a virtual machine, a hypervisor, or in physical networking equipment (e.g., a switch), in order perform desired operations.

Accordingly, a sensor may be deployed on each virtual machine, each hypervisor, and each switch. Each deployed sensor can collect and send information pertaining to the packets or flows passing through the respective sensor to another computing device, such as the collection and aggregation entity, as part of a control flow. By collectively analyzing data reported by each of these sensors, the collection and aggregation entity may determine a location of a sensor relative to the location of other sensors. In addition, the environment in which the sensor is located, with regard

to whether it has been deployed on a virtual machine, a hypervisor, or a switch, may also be determined.

The techniques presented herein provide for a way to determine the location of sensors in a virtualized computing environment from analyzing packets and/or traffic without additional configuration of the system in which the sensor is deployed. For example, when a virtual machine that includes a sensor migrates from a first location (host) under the control of a first hypervisor to a second location (host) under the control of a second hypervisor, the new location of the sensor may be automatically determined without additional configuration of the system, e.g., without updating an external configuration file.

FIG. **1** shows a diagram of an example virtualized network system **10** comprising servers **100**(**1**) and **100**(**2**), a network **150** that includes at least one network switch **160**, and a collection and analysis entity **200**. This example is not intended to be limiting with regard to the specific examples provided herein, as the techniques presented may be applied to any number of servers, and any number of networking switches. Although the collection and analysis entity **200** is shown as operating on a stand-alone server, the collection and analysis entity may be integrated with one of the servers.

Each server **100**(**1**) and **200**(**2**) may comprise a network interface card (NIC), a processor, and a memory. Specifically, server **100**(**1**) includes a network interface card **10**(**1**), a processor **15**(**1**) and memory **20**(**1**), and server **100**(**2**) includes a network interface card **10**(**2**), a processor **15**(**2**) and memory **20**(**2**). The memory and processing resources of a server may be partitioned among a plurality of virtual machines. In general, resources are allocated to a virtual machine, including memory, processing resources, etc., from the physical server on which it is instantiated by a virtual machine manager or hypervisor. The hypervisor may communicate with the Host Operating System (OS) residing on the server in order to partition available computing resources among a plurality of virtual machines. In other aspects, the hypervisor may communicate directly with the physical hardware layer itself.

One or more servers may each host a plurality of virtual machines, and a hypervisor may be used to manage the plurality of virtual machines. For example, server **100**(**1**) may host a plurality of virtual machines **50**(**1**A)-**50**(NA) that are managed by hypervisor **40**(**1**). Similarly, server **100**(**2**) may host a plurality of virtual machines **50**(**1**B)-**50**(NB) that are managed by hypervisor **40**(**2**). Each virtual machine may comprise a virtual switch/virtual network interface element (vNIC), and a virtual processor (vCPU). A vNIC logically connects a virtual machine to a virtual interface, allowing the virtual machine to send and receive traffic through the virtual interface. A vCPU is a CPU core assigned to the operating system of the virtual machine. Specifically, virtual machine **50**(**1**A) includes a vNIC **30**(**1**A) and a vCPU **35**(**1**A), virtual machine **50**(**2**A) includes a vNIC **30**(**2**A) and a vCPU **35**(**2**A), and virtual machine **50**(NA) includes a vNIC **30**(NA) and a vCPU **35**(NA). Similarly, with respect to server **100**(**2**), virtual machine **50**(**1**B) includes a vNIC **30**(**1**B) and a vCPU **35**(**1**B), virtual machine **50**(**2**B) includes a vNIC **30**(**2**B) and a vCPU **35**(**2**B), and virtual machine **50**(NB) includes a vNIC **30**(NB) and a vCPU **35**(NB).

In this example, software sensors are present in the virtualization hierarchy at the level of a virtual machine, a hypervisor, and at a networking switch. For example, sensors S_{VM} **62**(**1**A)-**62**(NA) and **62**(**1**B)-**62**(NB) are deployed at the virtual machine level (hence the designation $_{VM}$), sensors S_H **64**(**1**) and **64**(**2**) are deployed at the hypervisor level (hence the designation $_H$), and sensor S_N **66** is deployed at the networking switch level (hence the designation $_N$). In particular, with respect to server **100**(**1**), sensor S_{VM} **62**(**1**A) is deployed on virtual machine **50**(**1**A), sensor S_{VM} **62**(**2**A) is deployed on virtual machine **50**(**2**A), and sensor S_{VM} **62**(NA) is deployed on virtual machine **50**(NA). Similarly, sensor S_H **64**(**1**) is deployed on hypervisor **40**(**1**). With respect to server **100**(**2**), sensor S_{VM} **62**(**1**B) is deployed on virtual machine **50**(**1**B), sensor S_{VM} **62**(**2**B) is deployed on virtual machine **50**(**2**B), and sensor S_{VM} **62**(NB) is deployed on virtual machine **50**(NB). Likewise, sensor S_H **64**(**2**) is deployed on hypervisor **40**(**2**).

Traffic may flow between virtual machines on the same server, e.g., from vNIC **30**(**1**A) of virtual machine **50**(**1**A) through hypervisor **40**(**1**) to vNIC **30**(**2**A) of virtual machine **50**(**2**A). In other examples, traffic may flow between virtual machines on different servers, e.g., from vNIC **30**(**1**A) of virtual machine **50**(**1**A), through hypervisor **40**(**1**) and NIC **10**(**1**) to network switch **160**. Once at network switch **160**, the traffic may be directed through NIC **10**(**2**) and hypervisor **40**(**2**) to reach vNIC **30**(**1**B) on destination virtual machine **50**(**1**B).

Network **150** may include any number of any combinations of communications devices including switches, routers, etc. With respect to FIG. **1**, one or more network switches **160** may be deployed within network **150**, with the network switch **160** transmitting traffic between physical servers **100**(**1**), **100**(**2**) and the collection and analysis entity **200**.

Network switch **160** comprises switching logic **152** for directing traffic flow, and sensor S_N **66**. Switching logic **152** examines header information of packets and forwards packets to a destination device based upon Media Access Control (MAC) or IP addresses. Although FIG. **1** shows one network switch **160**, any number of network switches may be present in network **150**.

Collection and analysis entity **200** is also shown in FIG. **1**. In general, collection and analysis entity **200** may correspond to a single process or a cluster of processes for collecting and analyzing information reported by sensors. Collection and analysis entity **200** may include a memory **210**, a processor **215**, and a Network Interface Card (NIC) **220**. The memory **210** stores executable software instructions for collector and aggregator module **250** that receives and aggregates data transmitted as part of control flows by the plurality of deployed sensors. This information may be analyzed by software instructions of a sensor location module **275** that determines a location of each sensor relative to other sensors in the virtualized system as well as in a particular environment, e.g., on a virtual machine, hypervisor, or switch. Collection and analysis entity **200** may be a stand-alone server or reside/run on one of the servers **100**(**1**) or **100**(**2**).

A sensor may capture data or metadata associated with packets and/or traffic flows through the sensor. Accordingly, a sensor may report the captured data or metadata about the packets/traffic flows that it observes (or a subset thereof) to collection and analysis entity **200** via a control flow. Apart from captured network data or metadata, a sensor may also capture additional information about the system that it resides on, including but not limited to, data or metadata of active or previously active system processes, metadata of files that are present on the system, and so forth.

In general, a "sensor" as used herein refers to a software sensor, e.g., one or more processes or one or more agents, running on a system to capture network data and deployed within a networking or computing environment, e.g., a data

center, a cloud-based computing environment, or other large scale computing environment in which virtualization is deployed. A sensor may also be referred to as a packet inspection agent.

FIG. **2** is another diagram, similar to FIG. **1** but simplified, and showing a hierarchy of deployed sensors in a virtualized computing environment. Sensors may be present and running in multiple environments, including at the virtual machine level, at the hypervisor level, and at the physical switch level. In this example, sensor S_{VM} **62**(**1**A) may run as a process, a kernel module, or a kernel driver on a guest Operating System (OS) **85**(**1**A) installed on a virtual machine **50**(**1**A). Sensor S_v **62**(**2**A) may run as a process, a kernel module, or a kernel driver on a guest Operating System (OS) **85**(**2**A) installed on a virtual machine **50**(**2**A). Sensor S_v **62**(NA) may run as a process, a kernel module, or a kernel driver on a guest Operating System (OS) **85**(NA) installed on a virtual machine **50**(NA). Sensor S_H **64**(**1**), installed at hypervisor **40**(**1**), may run as a process, a kernel module, or a kernel driver on the host OS. Sensor S_N **66** may run as a process or a component in network switch **160** capable of performing routing or switching operations.

In some aspects, network switch **160** may provide for installation of sensors, e.g., using an agent or by acting as an agent itself. The switch or agent may export metadata or data corresponding to observed packets and/or traffic flows to collection and analysis entity **200**. In each location in which a sensor is placed, e.g., at a physical network equipment layer (such as a switch), a hypervisor layer, or a virtual machine layer, the sensor observes packets that flow through the respective layer in which it is installed and communicates this information to collection and aggregation entity **200**. In some aspects, each sensor is associated with a corresponding IP address, e.g., of a switch, a server, or a virtual machine that it is deployed on, allowing the corresponding IP address to be used as an identifier for the respective sensor. The sensor may also obtain the IP address of the collection and analysis entity **200** along with relevant port information in order to transmit information to the collection and analysis entity as part of a control flow.

As shown in FIG. **2**, a typical deployment for virtualized systems involves a plurality of virtual machines running under a hypervisor. Traffic from the virtual machines passes through the hypervisor, and traffic from the hypervisor passes through the network switch. Accordingly, in this type of architecture, traffic flows observed by sensors **62**(**1**A)-**62**(NA) inside virtual machines **50**(**1**A)-**50**(NA), respectively, are a subset of the network traffic observed by sensor S_H **64**(**1**) on hypervisor **40**(**1**). Also, the traffic flows observed by sensor S_H **64**(**1**) running on hypervisor **40**(**1**) are a subset of the traffic flows observed by sensor S_N **66** deployed on physical network switch **160**.

In a large data center environment, millions of virtual machines may be managed by a plurality of hypervisors running on a plurality of servers. Manually keeping track of where the sensors are located may be onerous. For many applications that analyze captured sensor data, knowing the location of where the sensor is, with respect to the location of other sensors, is important, as well as whether a sensor resides on a virtual machine, a hypervisor, or a switch.

FIG. **3**A shows traffic flows that were observed and reported by each of three sensors S_{VM}, S_H and S_N in the respective virtual machine, hypervisor and networking hierarchical levels. Each sensor has the capability to export information, e.g., as part of a control flow, to collection and aggregation entity **200**. This information may be transmitted to the collection and analysis entity **200** based on the IP address and port address of the collection and analysis entity. Sensors periodically report information about observed traffic flows to collection and analysis entity **200**. Information provided by each sensor includes a list of observed traffic flows between the present time and a previous time at which the observed traffic flows were reported to the collection and analysis entity.

As shown in FIG. **3**A, traffic flow F**1**, generated by a virtual machine and observed by a sensor S_{VM}, is also observed and reported by sensors S_H and S_N to collection and analysis entity **200**. The collection and analysis entity **200** will receive control flow reports for flow F**1** from sensors S_{VM}, S_H, and S_N. Traffic flow F**2**, generated by hypervisor **40** and observed by sensor S_H, is also observed and reported by sensor S_N (and not by sensor S_{VM}) to collection and analysis entity **200**. Accordingly, the collection and analysis entity **200** will receive control flow reports for flow F**2** from sensors S_H and S_N. Traffic flow F**3**, generated by the switch, is observed by sensor S_N (and not by sensors S_{VM} and S_H), and reported to collection and analysis entity **200**. The collection and analysis entity **200** will receive a control flow report for flow F**3** from sensor S_N. This information is summarized in FIG. **3**A, which shows: (1) flow F**1** reported by sensors S_{VM}, S_H, and S_N; (2) flow F**2** reported by sensors S_H and S_N; and (3) flow F**3** reported by sensor S_N.

Establishing the relationship of different network elements to each other is useful for a variety of applications, including monitoring traffic flow and detecting packet loss, e.g., determining whether a packet originating at a virtual machine was dropped along the network path or associated with a particular flow corresponding to malware. For instance, if a sensor reported flow F**1** at S_{VM}, but not at S_N, and it is known that traffic from sensor S_{VM} should be observed by sensor S_N, then it can be determined that packets for flow F**1** have been dropped.

FIG. **3**A shows a list of sensors and traffic flows that were observed and reported by each sensor. Each sensor reports observed traffic flows to the collection and analysis entity **200**, and this information may be aggregated to generate a list, for each flow (e.g., F**1**, F**2** and F**3**), containing the sensor IDs (S_D) of all sensors that report the traffic flow. Each sensor is associated with a unique IP address. For example, referring back to FIG. **2**, the IP address associated with sensor S_{VM} **62**(**1**A) may be the IP address of virtual machine **50**(**1**A), e.g., IP**1**. The IP address associated with sensor S_H **64**(**1**) may be the IP address of hypervisor **40**(**1**), e.g., IP**2**. The IP address associated with sensor S_N **66** may be the IP address of network switch **160**, e.g., IP**3**. These IP addresses may be used to identify the sensors. The sensor location module **275** of the collection and analysis entity **200** (FIG. **1**) may analyze the received traffic flow information, according to the process below, and as summarized in FIG. **3**B, to determine the relationship/location of a sensor relative to other sensors.

Continuing with the example, the list (L) of all sensors reporting traffic flow F**1** may be represented as F**1**=$\{S_{VM}, S_H, S_N\}$, the list of all sensors reporting traffic flow F**2** may be represented as F**2**=$\{S_H, S_N\}$, and the list of all sensors reporting traffic flow F**3** may be represented as F**3**=$\{S_N\}$. Sensor IDs are referred to in this example as "VM", "H" or "N".

For every sensor ID (S_I) in list L, a tuple is calculated. A tuple represents, for each sensor ID (S_I), the set of all sensors in the list L except for S_I. From a notation standpoint, this may be represented as $\{S_I$, (Set of all sensors in L except S_I)$\}$. As shown in FIG. **3**B, for flow F**1**, the generated tuples

are $\{S_{VM}, (S_H, S_N)\}$, $\{S_H, (S_{VM}, S_N)\}$, and $\{S_N, (S_{VM}, S_H)\}$. For flow F2, the generated tuples are $\{S_H, (S_N)\}$, and $\{S_N, (S_H)\}$. For flow F3, the generated tuples are $\{S_N, ( )\}$.

The generated tuples are grouped according to element S_I, with S_I being the first element and the remaining sensors being the second element. As shown in FIG. 3B, for S_{VM}, there is a single tuple: $\{S_{VM}, (S_H, S_N)\}$. For S_H, there are multiple tuples: $\{S_H, (S_{VM}, S_N)\}$ and $\{S_H, (S_N)\}$. For S_N, there are also multiple tuples: $\{S_N, (S_{VM}, S_H)\}$, (S_H)1 and $\{S_N, ( )\}$.

For each sensor S_I, the intersection of the second elements of the tuples is computed, to determine the 'Front Sensors'. The Front Sensors represent a list of the sensors that detect all flows originating from a sensor S_I. For S_{VM}, there is one tuple, and therefore, the intersection will simply be the tuple itself (S_H, S_N). For S_H, there are two tuples, (S_{VM}, S_N) and (S_N), and therefore, the intersection of the second elements $(S_{VM}, S_N) \cap (S_N)$ will be (S_N). For S_N, the intersection of the three tuples is the null set. Accordingly, the Front Sensors for S_{VM} are S_H and S_N, and the Front Sensors for S_H are S_N. Thus, flows originating from S_{VM} are detected by S_H and S_N, and flows originating from S_H are detected by S_N.

To determine the 'Rear Sensors', a difference set is computed. The Rear Sensors represent a list of the sensors from which flows originate. The difference set is the difference between the union set and the intersection set of the second elements. As shown in FIG. 3B, the union set for S_{VM} is (S_H, S_N), for S_H, the union set is (S_{VM}, S_N), and for S_N, the union set is (S_{VM}, S_H). Intersections were computed as described previously with regard to Front Sensors.

Accordingly, the difference set for S_{VM} is $(S_H, S_N)-(S_H, S_N)=\{ \}$, the difference set for S_H is (S_N) (S_{VM}, S_N) S_{VM}, and the difference set for S_N is $\{ \}-(S_{VM}, S_H)=(S_{VM}, S_H)\}$. Accordingly, the Rear Sensors for S_{VM} are the empty set, the Rear Sensors for S_H are S_{VM}, and the Rear Sensors for S_N are S_{VM} and S_H. Thus, S_{VM} has no rear sensors, S_{VM} is a rear sensor to S_H, and S_H is a rear sensor to S_N.

Based on the determination of the Rear Sensors and the Front Sensors, the relationship of the sensors may be established. In this example, the sensors are arranged such that traffic flows from S_{VM} to S_H and then to S_N. For a sensor hierarchy including three levels, it may also be determined that sensor S_{VM} is deployed in a virtual machine, sensor S_H is deployed in a hypervisor, and sensor S_N is deployed in a switch, as shown in FIG. 2.

This analysis may be extended to more than three levels of sensors. As another example, four sensors may report traffic flows, as shown in FIG. 4A. For each flow, a list (L) is obtained containing the sensor IDs (S_{ID}) of all sensors that report the traffic flow. For example, the list of all sensors reporting traffic flow F1 may be represented as F1=$\{S_1, S_2, S_3, S_4\}$, the list of all sensors reporting traffic flow F2 may be represented as F2=$\{S_2, S_3, S_4\}$, the list of all sensors reporting traffic flow F3 may be represented as F3=$\{S_3, S_4\}$, and the list of all sensors reporting traffic flow F4 may be represented as F4=$\{S_4\}$. FIG. 4B shows a summary of generated tuples for each sensor as well as a summary of intersections, unions and difference sets for the second elements of each group of tuples corresponding to a particular sensor. The analysis is similar to the example provided in FIGS. 3A and 3B, and is not repeated in detail here.

Based upon this analysis, the relationship of the various sensors with respect to one another may be determined. In this case, the sensors are arranged such that traffic flows from S_1 to S_2 to S_3 to S_4.

In still another embodiment, traffic flows may be reported by each sensor running on a virtual machine of a plurality of virtual machines. For example, referring back to FIG. 2, sensor S_{VM} 62(1A) may be running on virtual machine 50(1A) and sensor S_{VM} 62(2A) may be running on virtual machine 50(2A). Also, sensor S_H 64(1) may be running on hypervisor 40(1) and sensor S_H 66 may be running on network switch 160.

The techniques presented herein may be used to determine the relationship between, S_{VM} 62(1A), S_{VM} 62(2A), S_H 64(1) and S_N 66. Assuming that the list of all sensors reporting traffic flow F1 may be represented as F1={S_{VM} 62(1A), S_H 64(1), S_N 66}, the list of all sensors reporting traffic flow F5 may be represented as F5={S_{VM} 62(2A), S_H 64(1), S_N 66}, the list of all sensors reporting traffic flow F2 may be represented as F2={S_H 64(1), S_N 66}, and the list of all sensors reporting traffic flow F3 may be represented as F3={S_N 66}, the relationship between the sensors may be determined by performing the analysis provided herein. Thus, it may be determined that traffic flowing from sensor S_{VM1} 62(1A) flows through sensor S_H 64(1), and that traffic flowing from sensor S_H 64(1) flows through sensor S_N 66. Similarly, it may be determined that traffic flowing from sensor S_{VM2} 62(2A) flows through sensor S_H 64(1), and that traffic flowing from S_H 64(1) again flows through sensor S_N 66.

Accordingly, the present techniques are not intended to be limited to the particular hierarchical network architectures presented herein. The collection and aggregation entity 200 or any process that analyzes the traffic flow data and/or metadata exported by the sensors can be used to determine the position of a sensor relative to other sensors in a wide variety of architectures.

FIG. 5 illustrates components of a packet 300 that may be detected by a sensor as part of a traffic flow. In general, packet 300 may contain a header 310 and a payload 330. Header 310 comprises information related to routing the packet as well as characteristics of the packet itself. Payload 330 generally comprises data. It is understood that header 310 may contain additional components (not shown) utilized for control and data integrity purposes, e.g., components utilized for routing, components utilized for error checking, etc. The components shown in FIG. 5 are not intended to be limiting with regard to the types of components that may be included in a packet.

In particular, header 310 may comprise Source Media Access Control (SMAC) address 312 and Destination Media Access Control (DMAC) address 314. SMAC address 312 provides the address from which the packet has been sent. DMAC address 314 includes the address to which the packet is being sent. Header 310 may also comprise Source Internet Protocol (SIP) address 316 and Destination Internet Protocol (DIP) address 318. SIP address 316 provides the address from which the packet has been sent, and may be used for identification of the sensor. DIP address 318 includes the address to which the packet is being sent. The collector may utilize the SIP address as a sensor identifier, during determination of sensor position.

FIG. 6 shows an example of a flow diagram describing a process based on the examples described above in connection with FIGS. 3A, 3B, 4A and 4B, according to the techniques presented herein. At operation 410, information from each sensor of a plurality of sensors deployed in a virtualized network system is received, the information including one or more traffic flows detected by each sensor. At operation 420, for each traffic flow, a list/set of sensors reporting the traffic flow is generated. At operation 430, a tuple having a first element and a second element is calculated, for each sensor of the list/set of sensors, wherein the

first element corresponds to a selected sensor of the set of sensors and the second element corresponds to the remaining sensors of the set of sensors. At operation **440**, all tuples having a same first element are grouped together. At operation **450**, an intersection of the second elements of each group of tuples is computed to determine a front set of sensors. At operation **460**, a difference between a union of the second elements and the intersection of the second elements of each group of tuples is computed to determine a rear set of sensors. At operation **470**, for each respective sensor and based upon the front set and the rear set of sensors, the relationship of each sensor with respect to other sensors within the virtualized network system is established.

FIG. **7** shows a high-level flow chart that more generally depicts the operations performed according to the techniques presented herein. At operation **610**, in a virtualized computing system in which a plurality of software sensors are deployed and in which there are one or more traffic flows, captured network data is received from the plurality of sensors, the captured network data from a given sensor of the plurality of sensors indicating one or more traffic flows detected by the given sensor. At operation **620**, the received captured network data is analyzed to identify, for each respective sensor, a first group of sensors, a second group of sensors, and a third group of sensors, wherein all traffic flows observed by the first group of sensors are also observed by the second group of sensors, and all traffic flows observed by the second group of sensors are also observed by the third group of sensors. At operation **630**, for each respective sensor, the location of each respective sensor relative to the other sensors within the virtualized computing system is determined based upon whether the respective sensor belongs to the first group, the second group, or the third group of sensors.

Advantages of the present techniques include determining sensor location automatically from analyzing captured network data with zero additional configuration of the system. Sensor location and topology in a cloud/data center environment may be dynamically determined based upon the information provided as part of control flows from each deployed sensor. Network hardware placement changes can be tracked automatically, and there is no need to manually update sensor location information with configuration files.

These techniques are applicable to any type of computing environment, including computing devices such as virtual machines and hypervisors, containers and container manager bare metal compute devices, etc., and are applicable to a variety of network architectures, including leaf-spine, traditional access-aggregation-core tree topologies, etc.

Additionally, the techniques presented herein are not dependent upon a particular hypervisor environment or specific management solution. Rather, these techniques are platform independent, and thus, provide for detecting and updating the location of a sensor (relative to other sensors or with respect to a physical location) automatically. Thus, there is no need to interface with hypervisor management software in order to detect that new virtual machines have been instantiated, that existing virtual machines have been migrated, or that existing virtual machines have been removed.

Accordingly, the techniques presented herein allow determining for sensor location, e.g., whether the sensor is on a virtual machine, a hypervisor, or a networking switch even in a dynamic cloud/data center environment with potentially millions of sensors, to be determined as frequently as control flows are sent to a collection and analysis entity. Also, present techniques provide for determining relative location of sensors with respect to other sensors. These techniques are not limited to the specific examples recited herein, but may be applied to any system in which reporting elements are deployed throughout the system.

In summary, in one form, a method is provided comprising receiving, in a virtualized computing system in which a plurality of software sensors are deployed and in which there are one or more traffic flows, captured network data from the plurality of sensors, the captured network data from a given sensor of the plurality of sensors indicating one or more traffic flows detected by the given sensor; analyzing the received captured network data to identify, for each respective sensor, a first group of sensors, a second group of sensors, and a third group of sensors, wherein all traffic flows observed by the first group of sensors are also observed by the second group of sensors, and all traffic flows observed by the second group of sensors are also observed by the third group of sensors; and determining, for each respective sensor, a location of each respective sensor relative to other sensors within the virtualized computing system based upon whether the respective sensor belongs to the first group of sensors, the second group of sensors, or the third group of sensors.

In another form, an apparatus is provided comprising: a network interface unit configured to enable network communications, a memory, and a processor configured to: receive, in a virtualized computing system in which a plurality of software sensors are deployed and in which there are one or more traffic flows, captured network data from the plurality of sensors, the captured network data from a given sensor of the plurality of sensors indicating one or more traffic flows detected by the given sensor; analyze the received captured network data to identify, for each respective sensor, a first group of sensors, a second group of sensors, and a third group of sensors, wherein all traffic flows observed by the first group of sensors are also observed by the second group of sensors, and all traffic flows observed by the second group of sensors are also observed by the third group of sensors; and determine, for each respective sensor, a location of each respective sensor relative to other sensors within the virtualized computing system based upon whether the respective sensor belongs to the first group of sensors, the second group of sensors, or the third group of sensors.

In yet another form, a non-transitory computer readable storage media is provided that stores instructions that, when executed by a processor of a network or computing device, cause the processor to: receive, in a virtualized computing system in which a plurality of software sensors are deployed and in which there are one or more traffic flows, captured network data from the plurality of sensors, the captured network data from a given sensor of the plurality of sensors indicating one or more traffic flows detected by the given sensor; analyze the received captured network data to identify, for each respective sensor, a first group of sensors, a second group of sensors, and a third group of sensors, wherein all traffic flows observed by the first group of sensors are also observed by the second group of sensors, and all traffic flows observed by the second group of sensors are also observed by the third group of sensors; and determine, for each respective sensor, a location of each respective sensor relative to other sensors within the virtualized computing system based upon whether the respective sensor belongs to the first group of sensors, the second group of sensors, or the third group of sensors.

Described above are examples. The concepts described herein may be embodied in other specific forms without

departing from the spirit or essential characteristics thereof. The foregoing examples are therefore to be considered in all respects illustrative and not meant to be limiting. Accordingly, it is intended to embrace all such alterations, modifications and variations that fall within the spirit and scope of any claims filed in applications claiming priority hereto interpreted in accordance with the breadth to which they are fairly, legally and equitably entitled.

What is claimed is:

1. A computer-implemented method comprising:

in a virtualized computing system in which a plurality of software sensors are deployed and in which there are one or more traffic flows, receiving captured network data from the plurality of sensors, the captured network data from a given sensor of the plurality of sensors including a sensor identity of the given sensor and flow identifiers indicating one or more traffic flows detected by the given sensor;

analyzing the received captured network data to identify a first group of sensors, a second group of sensors, and a third group of sensors, wherein all traffic flows observed by the first group of sensors are also observed by the second group of sensors, but only a subset of traffic flows observed by the second group of sensors are also observed by the first group of sensors, and wherein all traffic flows observed by the second group of sensors are also observed by the third group of sensors, but only a subset of the traffic flows observed by the third group of sensors are also observed by the second group of sensors; and

determining, for each respective sensor, a location of the respective sensor relative to one or more other sensors within the virtualized computing system based upon which group of sensors, among the first group of sensors, the second group of sensors, or the third group of sensors, the respective sensor belongs,

wherein if the respective sensor belongs to the first group of sensors, determining that the respective sensor is within a virtual machine,

wherein if the respective sensor belongs to the second group of sensors, determining that the respective sensor is within a hypervisor, and

wherein if the respective sensor belongs to the third group of sensors, determining that the respective sensor is within a network device.

2. The method of claim **1**, wherein the received captured network data for the given sensor includes an Internet Protocol address or a Media Access Control address for the given sensor within the virtualized computing system.

3. The method of claim **1**, further comprising:

migrating a virtual machine from a first host to a second host in the virtualized computing system, wherein the virtual machine includes one of the plurality of sensors; and

determining a location of the virtual machine that has migrated from the first host to the second host in the virtualized computing system, based upon the captured network data from the plurality of sensors.

4. The method of claim **1**, further comprising:

determining, for a plurality of virtual machines and a plurality of hypervisors, which sets of virtual machines are managed by which hypervisors, based upon the captured network data.

5. The method of claim **1**, further comprising:

for each respective traffic flow of the one or more traffic flows, identifying a set of software sensors that detects the respective traffic flow;

calculating, for each software sensor of the set of software sensors, a tuple having a first element and a second element, wherein the first element corresponds to an individual sensor of the set of software sensors and the second element corresponds to the remaining sensors in the set of software sensors; and

grouping, for each respective sensor, all tuples having the same first element.

6. The method of claim **5**, comprising:

for each respective group of tuples, computing an intersection of the second elements of the tuples in the respective group of tuples to determine a first subset of sensors; and

computing a difference between a union of the second elements of the tuples in the respective group of tuples and the intersection of the second elements of the tuples in the respective group of tuples to determine a second subset of sensors.

7. An apparatus comprising:

a network interface unit configured to enable network communications;

a memory; and

a processor coupled to the network interface unit and configured to:

receive, in a virtualized computing system in which a plurality of software sensors are deployed and in which there are one or more traffic flows, captured network data from the plurality of sensors, the captured network data from a given sensor of the plurality of sensors including a sensor identity of the given sensor and flow identifiers indicating one or more traffic flows detected by the given sensor;

analyze the received captured network data to identify a first group of sensors, a second group of sensors, and a third group of sensors, wherein all traffic flows observed by the first group of sensors are also observed by the second group of sensors, but only a subset of traffic flows observed by the second group of sensors are observed by the first group of sensors, and wherein all traffic flows observed by the second group of sensors are also observed by the third group of sensors, but only a subset of traffic flows observed by the third group of sensors are also observed by the second group of sensors; and

determine, for each respective sensor, a location of the respective sensor relative to one or more other sensors within the virtualized computing system based upon which group of sensors, among the first group of sensors, the second group of sensors, or the third group of sensors, the respective sensor belongs,

wherein if the respective sensor belongs to the first group of sensors, the processor is configured to determine that the respective sensor is within a virtual machine,

wherein if the respective sensor belongs to the second group of sensors, the processor is configured to determine that the respective sensor is within a hypervisor, and

wherein if the respective sensor belongs to the third group of sensors, the processor is configured to determine that the respective sensor is within a network device.

8. The apparatus of claim **7**, wherein the received captured network data for the given sensor includes an Internet Protocol address or a Media Access Control address for the given sensor within the virtualized computing system.

9. The apparatus of claim **7**, wherein the processor is configured to:

migrate a virtual machine from a first host to a second host in the virtualized computing system, wherein the virtual machine includes one of the plurality of sensors; and

determine the location of the migrated virtual machine that has migrated from the first host to the second host in the virtualized computing system, based upon the captured network data from the plurality of sensors.

10. The apparatus of claim **7**, wherein the processor is configured to:

determine, for a plurality of virtual machines and a plurality of hypervisors, which sets of virtual machines are managed by which hypervisors, based upon the captured network data.

11. The apparatus of claim **7**, wherein the processor is configured to:

identify, for each respective traffic flow of the one or more traffic flows, a set of software sensors that detects the respective traffic flow;

calculate, for each software sensor of the set of software sensors, a tuple having a first element and a second element, wherein the first element corresponds to an individual sensor of the set of software sensors and the second element corresponds to the remaining sensors in the set of software sensors; and

group, for each respective sensor, all tuples having the same first element.

12. The apparatus of claim **11**, wherein the processor is configured to:

for each respective group of tuples, compute an intersection of the second elements of the tuples in the respective group of tuples to determine a first subset of sensors; and

compute a difference between a union of the second elements of the tuples in the respective group of tuples and the intersection of the second elements of the tuples in the respective group of tuples to determine a second subset of sensors.

13. A non-transitory computer readable storage media encoded with instructions that, when executed by a processor of a computing device, cause the processor to:

receive, in a virtualized computing system in which a plurality of software sensors are deployed and in which there are one or more traffic flows, captured network data from the plurality of sensors, the captured network data from a given sensor of the plurality of sensors including a sensor identity of the given sensor and flow identifiers indicating one or more traffic flows detected by the given sensor;

analyze the received captured network data to identify a first group of sensors, a second group of sensors, and a third group of sensors, wherein all traffic flows observed by the first group of sensors are also observed by the second group of sensors, but only a subset of traffic flows observed by the second group of sensors are observed by the first group of sensors, and wherein all traffic flows observed by the second group of sensors are also observed by the third group of sensors, but only a subset of traffic flows observed by the third group of sensors are also observed by the second group of sensors; and

determine, for each respective sensor, a location of the respective sensor relative to one or more other sensors within the virtualized computing system based upon which group of sensors, among the first group of sensors, the second group of sensors, or the third group of sensors, the respective sensor belongs,

wherein if the respective sensor belongs to the first group of sensors, the instructions cause the processor to determine that the respective sensor is within a virtual machine,

wherein if the respective sensor belongs to the second group of sensors, the instructions cause the processor to determine that the respective sensor is within a hypervisor, and

wherein if the respective sensor belongs to the third group of sensors, the instructions cause the processor to determine that the respective sensor is within a network device.

14. The non-transitory computer readable storage media of claim **13**, wherein the processor is configured to:

migrate a virtual machine from a first host to a second host in the virtualized computing system, wherein the virtual machine includes one of the plurality of sensors; and

determine the location of the migrated virtual machine that has migrated from the first host to the second host in the virtualized computing system, based upon the captured network data from the plurality of sensors.

15. The non-transitory computer readable storage media of claim **13**, wherein the processor is configured to:

determine, for a plurality of virtual machines and a plurality of hypervisors, which sets of virtual machines are managed by which hypervisors, based upon the captured network data.

16. The non-transitory computer readable storage media of claim **13**, wherein the processor is configured to:

identify, for each respective traffic flow of the one or more traffic flows, a set of software sensors that detects the respective traffic flow;

calculate, for each software sensor of the set of software sensors, a tuple having a first element and a second element, wherein the first element corresponds to an individual sensor of the set of software sensors and the second element corresponds to the remaining sensors in the set of software sensors; and

group, for each respective sensor, all tuples having the same first element.

17. The non-transitory computer readable storage media of claim **16**, wherein the processor is configured to:

compute, for each respective group of tuples, an intersection of the second elements of the tuples in the respective group of tuples to determine a first subset of sensors; and

compute a difference between a union of the second elements of the tuples in the respective group of tuples and the intersection of the second elements of the tuples in the respective group of tuples to determine a second subset of sensors.

* * * * *