電子電工學
Lecture 8

Midterm Exam II info

Date: Nov 25, 2020 (Wed)
Time: 3:10 ~ 6:00 pm (in class)
Location: 化工系館柏林講堂/93156
Coverage: Textbook ~ Chapter 8

Chapter 7

LINEAR OPERATION OF THE OPAMP

Opamp review

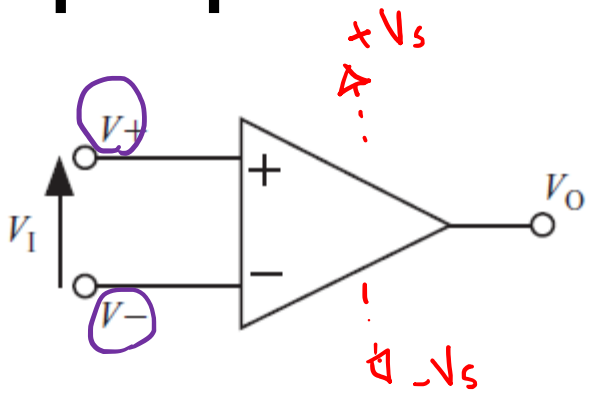

Figure 6.3 The conventional representation of an opamp

$V_O \sim V_I$

Linear operation

$V_O = A V_I = A(V_+ - V_-)$

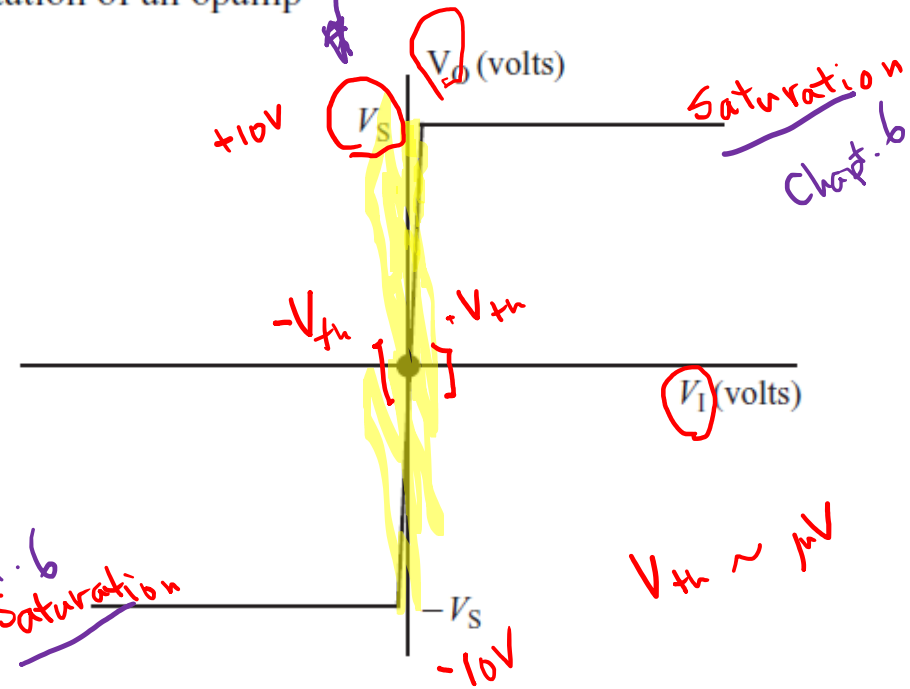

Chapt 6.

Comparator

$V_+ > V_- \Rightarrow V_O \Rightarrow +V_S$

$V_+ < V_- \Rightarrow V_O \Rightarrow -V_S$

$V_{th} \sim \mu V$

Figure 6.2 The form of the relation between the input V_I and output V_O voltages of an opamp

Recap: Schmitt trigger

2 states

$$V_0 = \begin{cases} +10\,V \\ -10\,V \end{cases}$$

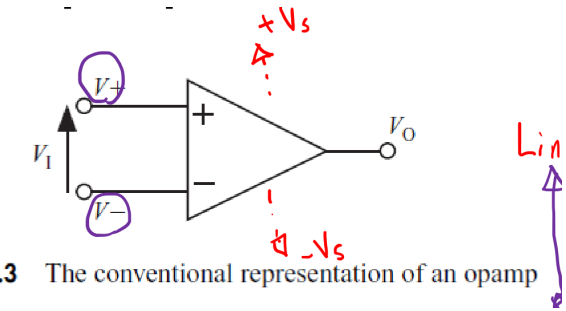

Figure 6.3 The conventional representation of an opamp

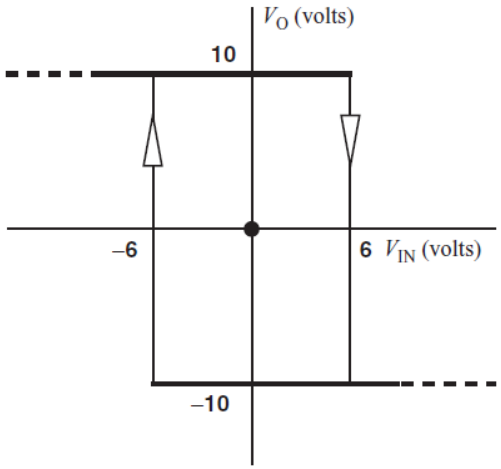

Figure 6.9 The conditions relating the input and output voltages of the Schmitt trigger of Figure 6.7, showing the fast transitions between the possible stable output states Arrows denote a fast transition

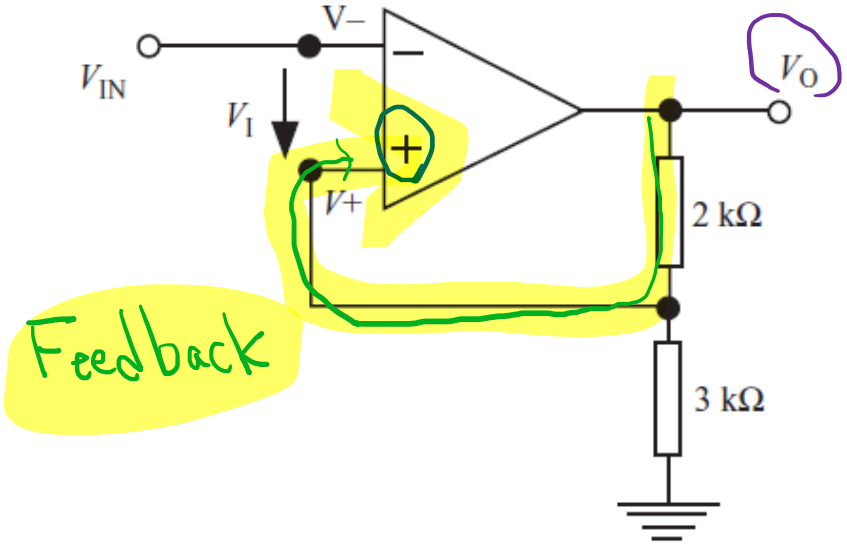

Figure 6.7 The Schmitt trigger

Recap: another trigger

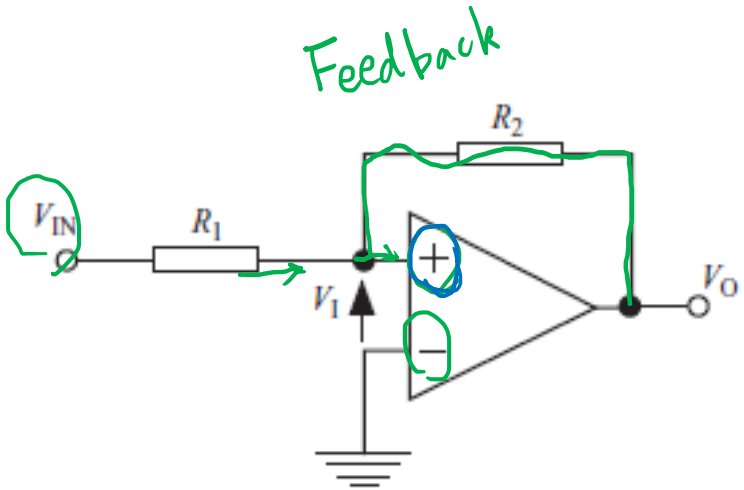

2 states

$V_o \nearrow +8\ V$

$V_o \searrow -8\ V$

Figure 6.11 Another trigger circuit whose output state can be controlled by an input voltage

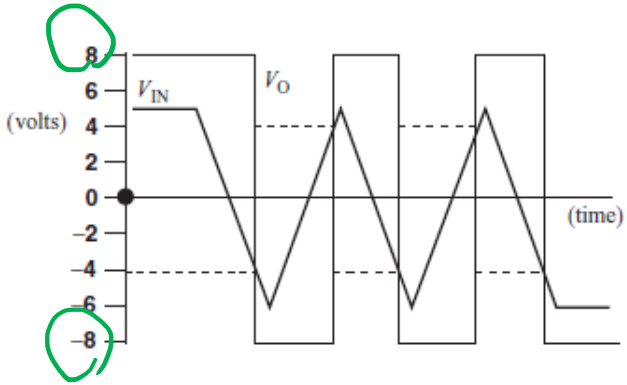

Figure 6.15 The waveform of the output voltage of the trigger circuit of Figure 6.13(a)

Feedback: positive and negative

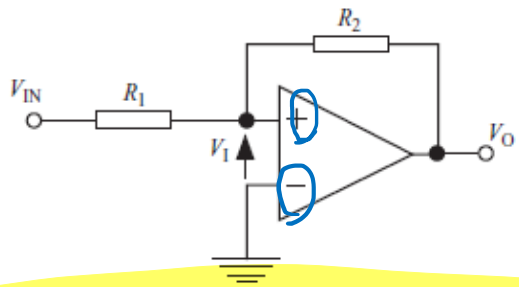

Figure 6.11 Another trigger circuit whose output state can be controlled voltage

Positive Feedback

Negative Feedback

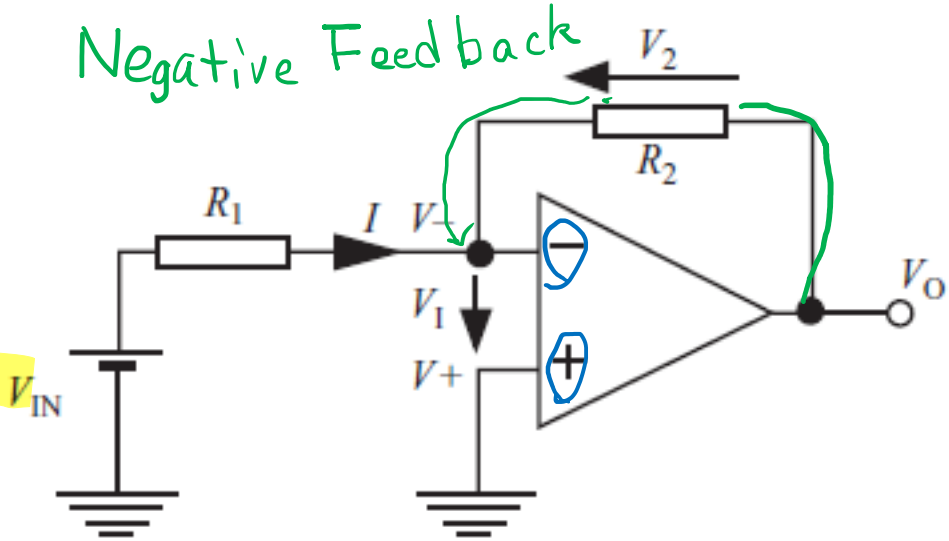

Figure 7.1 The inverter circuit

Negative feedback

$V_o \sim V_{IN}$ relation

In Linear operation region

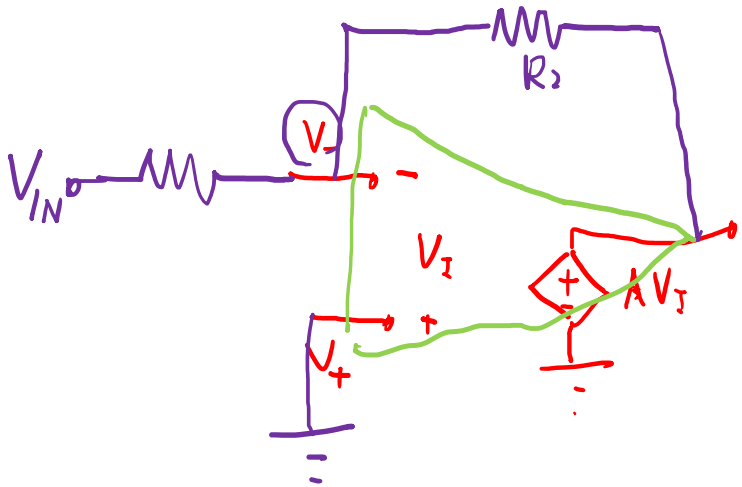

KCL @ V_-

① $\dfrac{V_{IN}-V_-}{R_1} + \dfrac{V_o - V_-}{R_2} = 0$ $\quad V_o = -AV_-$

Linear amplifier

$\dfrac{V_{IN}}{R_1} = \dfrac{V_-}{R_1} + \dfrac{AV_-}{R_2} + \dfrac{V_-}{R_2}$

$\dfrac{V_{IN}}{R_1} = V_-\left(\dfrac{1}{R_1} + \dfrac{A}{R_2} + \dfrac{1}{R_2}\right)$

② $V_o = AV_I = A(0 - V_-) = -AV_-$

$A \to 10^5 \quad \infty$

① $\to \dfrac{V_{IN}}{R_1} = V_-\left(\dfrac{1}{R_1} + \dfrac{1}{R_2} + \dfrac{A}{R_2}\right)$

$\sim 0 \quad \sim 0$

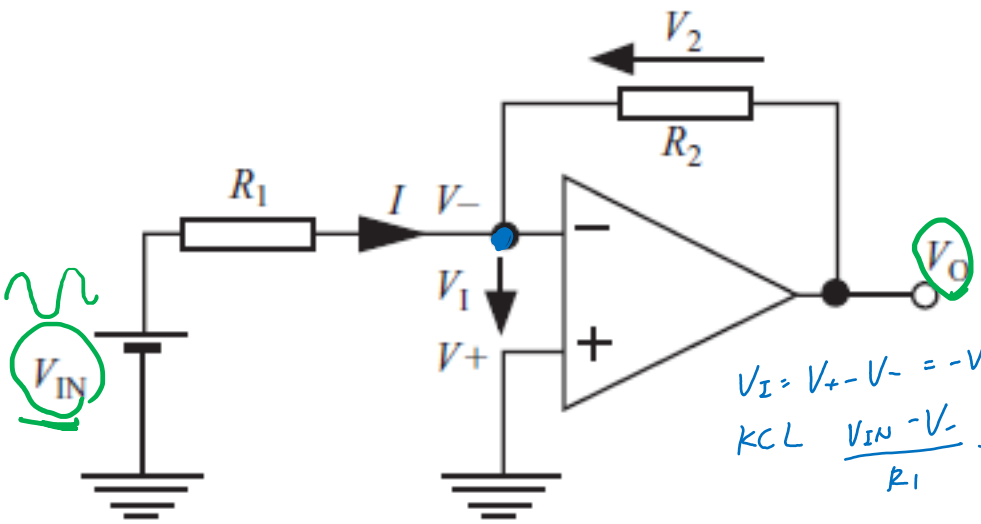

Figure 7.1 The inverter circuit

③ $\boxed{\dfrac{V_{IN}}{R_1} \simeq V_- \dfrac{A}{R_2}}$

$V_I = V_+ - V_- = -V_-$

KCL $\dfrac{V_{IN} - V_-}{R_1} + \dfrac{V_o - V_-}{R_2} = 0$ 代 $V_o = AV_I$

$\Rightarrow V_o = -AV_-$

$\dfrac{V_{IN} - V_-}{R_1} + \dfrac{A(-V_-) - V_-}{R_2} = 0$

$\dfrac{V_{IN}}{R_1} = \dfrac{V_-}{R_1} + \dfrac{AV_-}{R_2} + \dfrac{V_-}{R_2} = V_-\left(\cancel{\dfrac{1}{R_1} + \dfrac{1}{R_2}} + \dfrac{A}{R_2}\right)$

$\because A \to \infty$

$\therefore \dfrac{1}{R_1}, \dfrac{1}{R_2} \to 0$

Negative feedback

③ $\frac{V_{IN}}{R_1} \approx V_- \frac{A}{R_2}$ $\Rightarrow V_- = \frac{1}{A}\left(\frac{R_2}{R_1}\right)V_{IN}$

$\therefore V_- \approx 0$

$\Rightarrow V_- \approx V_{IN} \frac{R_2}{AR_1}$ $\rightarrow$ $V_- \approx 0$

$A \to \infty$

negative feedback 就是 $V_- = 0$

$V_O = +AV_I = -AV_-$

$\approx -A \cdot V_{IN} \frac{R_2}{AR_1}$

$V_O \approx -V_{IN} \frac{R_2}{R_1}$

Linear region

$V_I \sim 0$

$$\boxed{\frac{V_O}{V_{IN}} \approx -\frac{R_2}{R_1}}$$

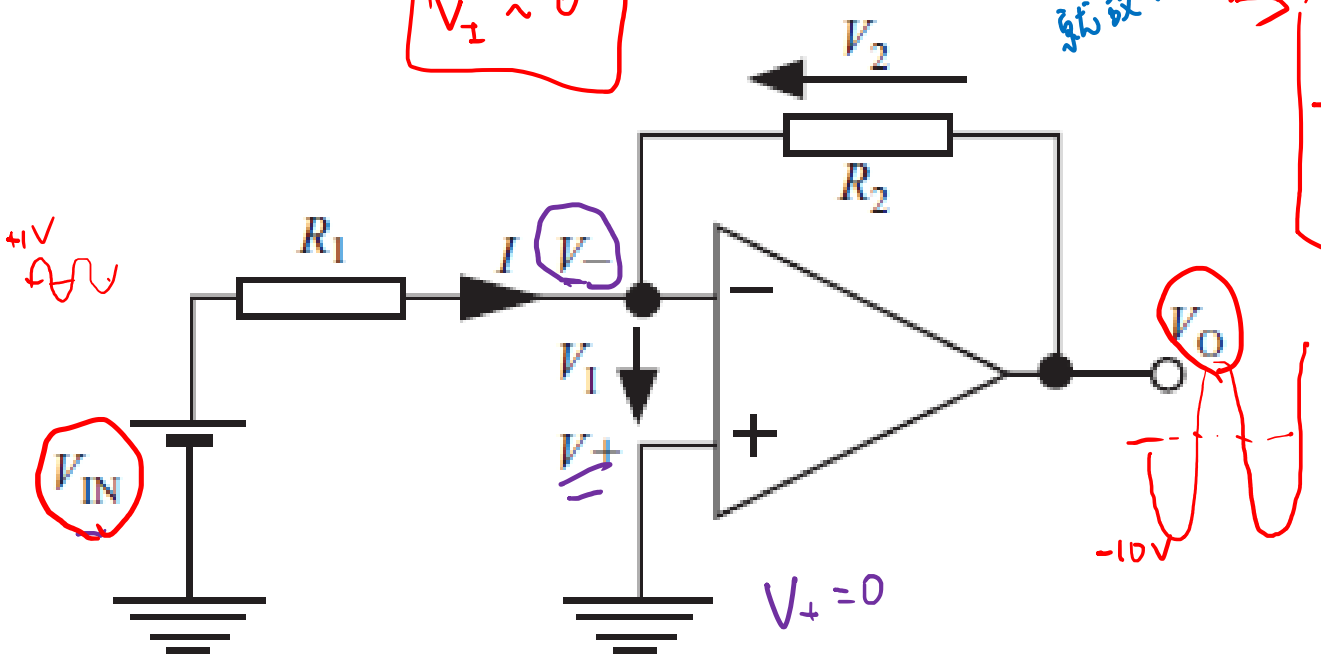

Irrelevant to A

(Large A)

Figure 7.1 The inverter circuit

Virtual short-circuit

Negative Feedback

$\leftarrow \boxed{V_I \approx 0}$

Linear Region

$V_o = A V_I$

$V_o = AV_I$

Ideal opamp

1. $A \rightarrow \infty$ $\rightarrow V_I \Rightarrow 0$
2. $i_- = i_+ = 0$

In practice

$A \sim 10^4$ to 10^6

V_o $-10V \leftrightarrow 10V$

$\Rightarrow$ $V_I \sim 10\,\mu V$ to $1\,mV$

Small compared to V_{IN}, V_o

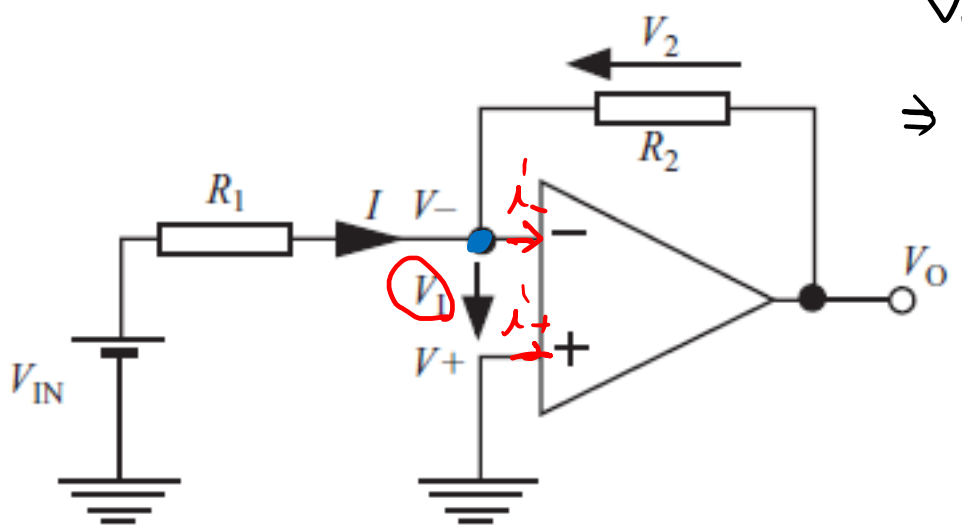

Figure 7.1 The inverter circuit

Virtual short-circuit / Virtual ground

$V_I \approx 0$

$V_+ = V_-$

$V_+ = 0$

$\Rightarrow V_- \approx 0$

(Virtual earth)

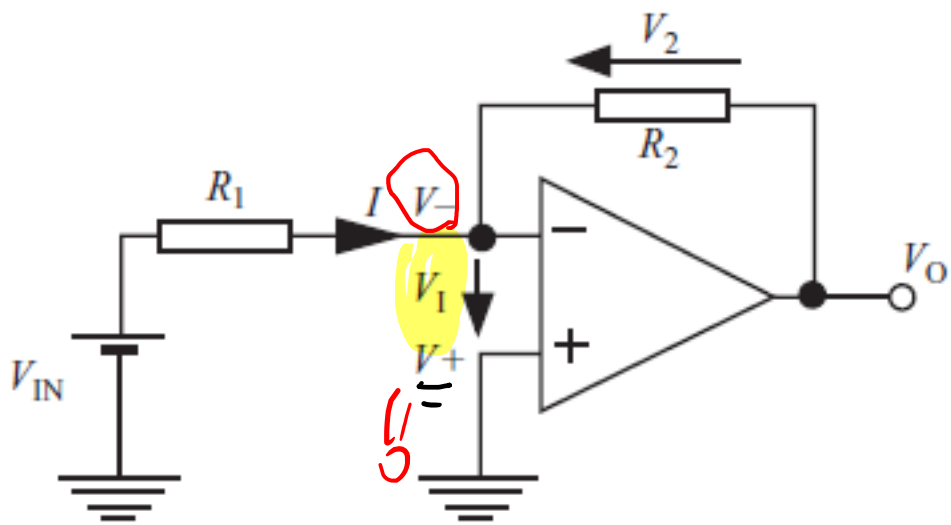

Figure 7.1 The inverter circuit

Example 7.1

$V_o \sim V_{IN}$ Relation?

$V_+ = 0 \xrightarrow[\text{Short Ckt}]{\text{Virtual}} V_- = 0$ (Virtual Ground)

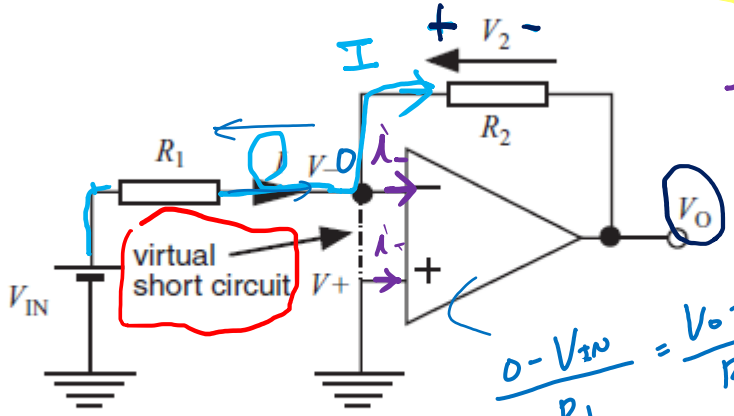

Ideal opamp

$i_- = i_+ = 0$

$I = \frac{V_{IN} - V_-}{R_1} = \frac{V_{IN} - 0}{R_1} = \frac{V_{IN}}{R_1}$

$\frac{0 - V_{IN}}{R_1} = \frac{V_o - 0}{R_2}$

$V_2 = IR_2 = \frac{V_{IN}}{R_1} \cdot R_2$

Figure 7.2 The inverter circuit, with the virtual short-circuit sketched in

Apply KVL

$V_o + V_2 + V_I = 0$

$V_I \to 0$

$V_{IN} = -V_o \frac{R_1}{R_2}$

$V_o = -V_2 = -IR_2 = -\frac{V_{IN}}{R_1} \cdot R_2$

$$\boxed{\frac{V_o}{V_{IN}} = -\frac{R_2}{R_1}}$$

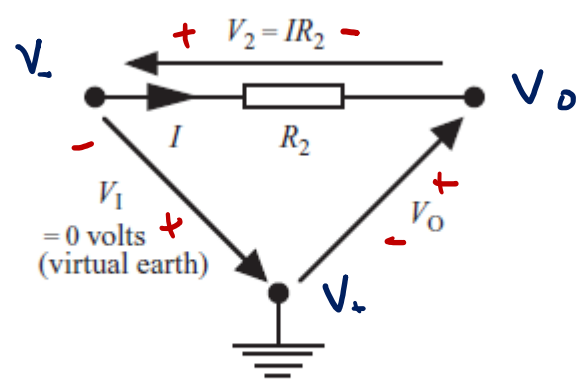

Figure 7.3 An application of KVL to the inverter circuit

Model of inverter

$$\frac{V_O}{V_{IN}} = -\frac{R_2}{R_1}$$

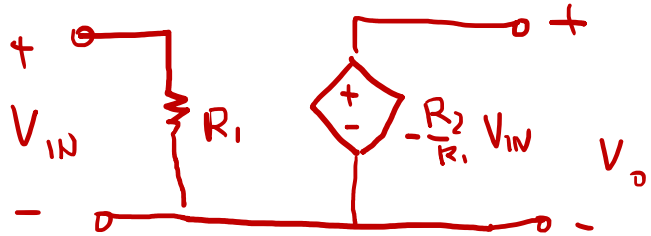

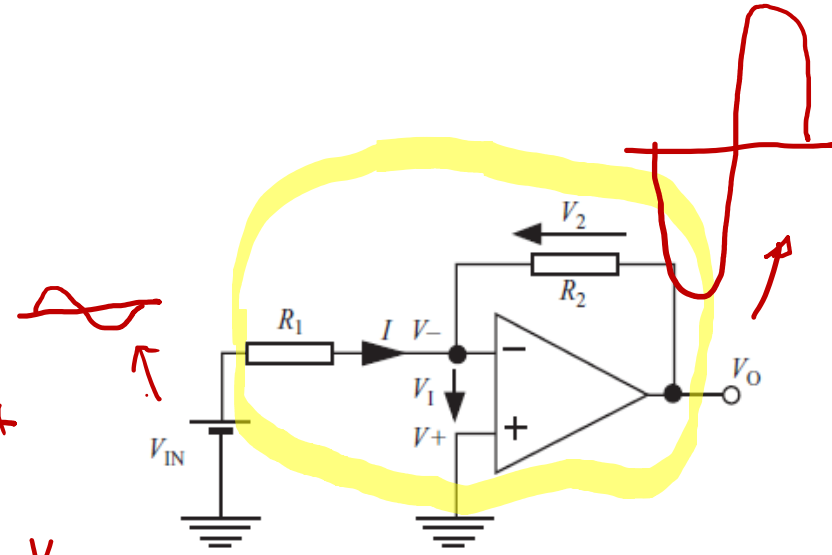

Figure 7.1 The inverter circuit

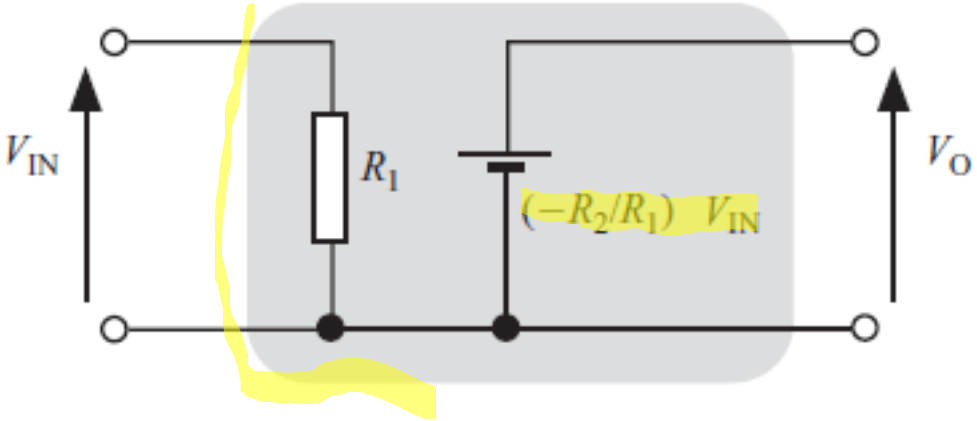

Figure 7.4 A model of the inverter circuit

Inverter FAQ

Where does current I flow?

I Passing R_2
flow into opamp's output terminal.

What does 'minus sign' mean?

$$\frac{V_o}{V_{IN}} = -\frac{R_2}{R_1}$$

"minus" "–" → opposite polarity

R_2/R_1 → magnitude

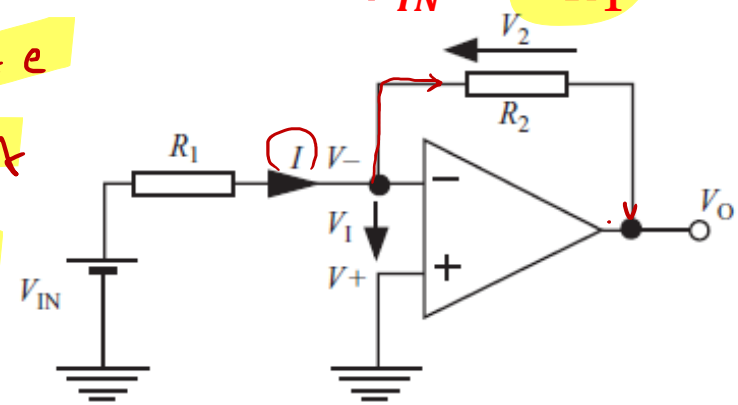

Figure 7.1 The inverter circuit

Inverter FAQ: Gain loss?

Opamp : gain $A \sim 10^5$ ↘ why ?

→ Inverter gain $\sim 10^7$

Reason 1. Manufacturing variations

"Identical" → Not so.

Gain A varies a lot!

Inverter ratio R_2/R_1 ← "precision resistor"

Less variate < 10%

Reason 2. Frequency bandwidth increasing.

(Chapter 10)

Reason 3. More stable.

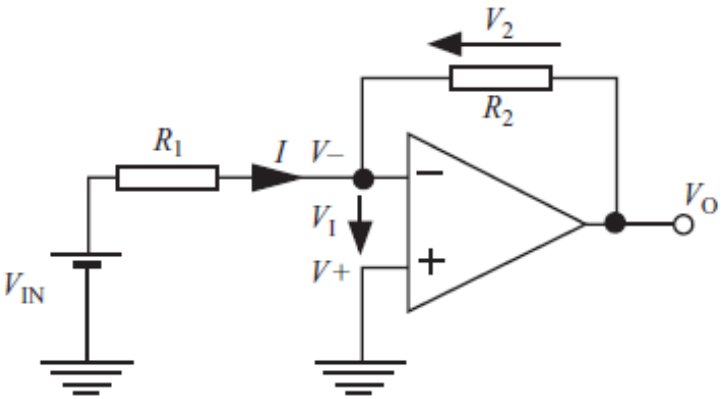

Figure 7.1 The inverter circuit

Stability issue

"STABLE"

Linear Region

Negative Feedback

$\frac{V_o}{V_{IN}} = -\frac{R_2}{R_1}$

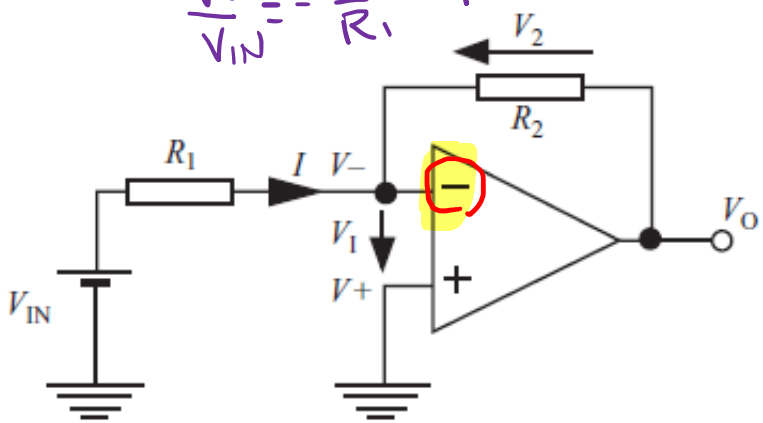

Figure 7.1 The inverter circuit

"UNSTABLE"

Saturation

Positive Feedback

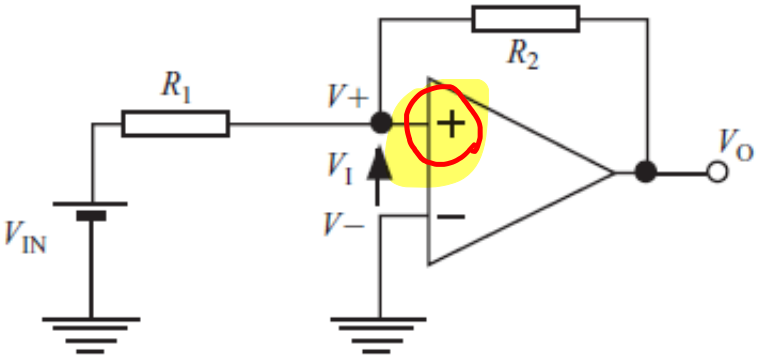

Figure 7.5 The inverter circuit with the opamp input terminals interchanged

Positive feedback analysis

Assume $V_{IN} \to 0$

Expect $V_o = 0$

$\exists$ always noise ε at V_o

$\varepsilon < 10^{-6}$ V

$V_I = V_+ - V_-$ ($V_- = 0$)

$V_o = \varepsilon$

$V_o = AV_I$ & $V_I = V_+$

$V_+ = \frac{1}{2}V_o = \frac{1}{2}\varepsilon$

$\Rightarrow V_+ \simeq \varepsilon/2 \to V_o = A\frac{\varepsilon}{2}$

$\varepsilon = V_o \begin{cases} +V_S \Rightarrow V_I > 0 \\ -V_S \Rightarrow V_I < 0 \end{cases}$

$\to V_+ \simeq A\frac{\varepsilon}{4} \to V_o = A^2\frac{\varepsilon}{4}$

N $\to \cdots \to$

$\to V_o = \left(A\frac{1}{2}\right)^N \varepsilon$

$V_o = \left(A\frac{1}{2}\right)^N \varepsilon$

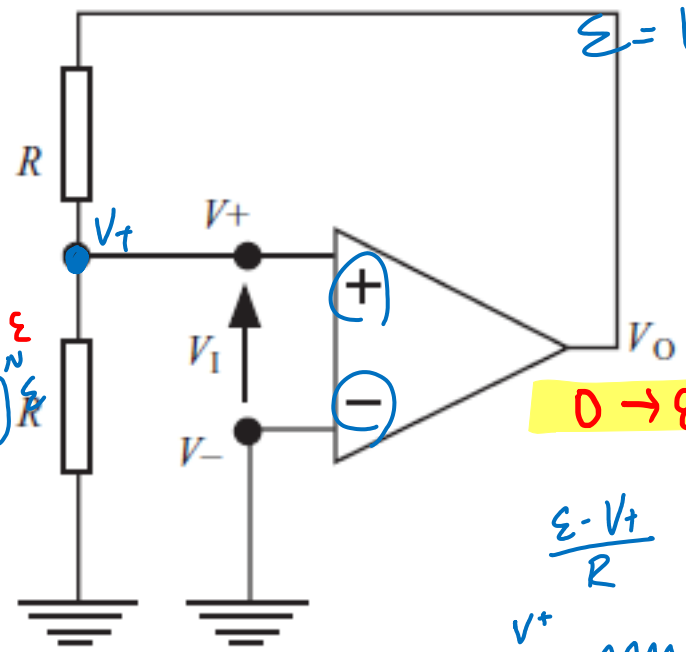

$0 \to \varepsilon \to \cdots \to$ Saturation

Saturation

$V_o \begin{cases} +V_S \\ -V_S \end{cases}$

$\frac{\varepsilon - V_+}{R}$

$V_o = I \cdot 2R$

$I = \frac{V_o}{2R}$

$V^+ = \frac{V_o}{2}$

V_o — V^+ — R — 0

ε R 0

Figure 7.6 The circuit of Figure 7.5 redrawn

virtual short circuit

Negative Feedback

$V_o \begin{cases} +V_s & V_I > 0 \quad V_+ - V_- > 0 \quad V_{IN} \\ -V_s & V_I < 0 \quad V_+ - V_- < 0 \end{cases}$

$V_o = A(V_{IN} - V_-)$

$V_o = A(V_{IN} - \beta V_o)$

$(1+A\beta)V_o = AV_{IN}$

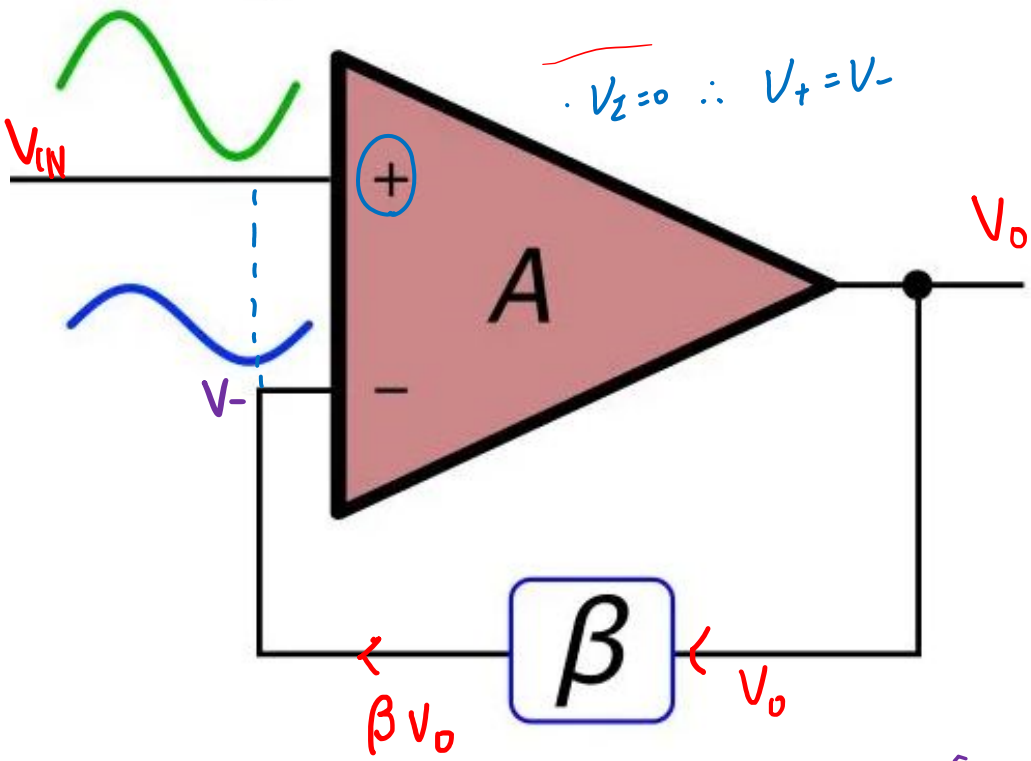

$\because V_I = 0 \therefore V_+ = V_-$

In general

$$V_o = A(V_{IN} - V_-)$$

$$= A(V_{IN} - \beta V_o)$$

$$\Rightarrow (1 + A\beta)V_o = AV_{IN}$$

$$\Rightarrow \frac{V_o}{V_{IN}} = \frac{A}{1 + A\beta}$$

$$\frac{V_o}{V_{IN}} = \frac{A}{1 + A\beta}$$

$A \to \infty$

If $A \to \infty$ $\boxed{\frac{V_o}{V_{IN}} \to \frac{1}{\beta}}$ $\frac{V_o}{V_{IN}} = \frac{1}{\beta}$

Decay

$|\beta| < 1$

Stable solution

Negative feedback

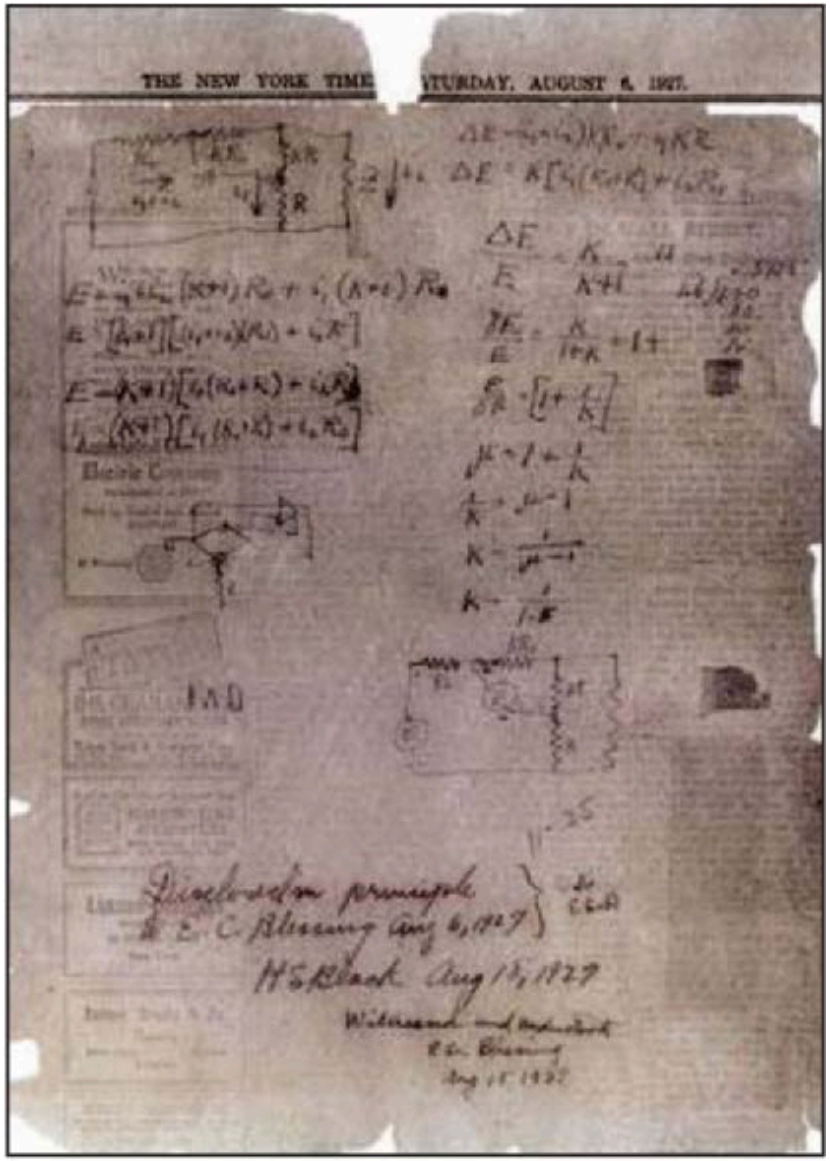

FIGURE 1. The page from the *New York*

Bell Lab
AT&T

Harold Stephen Black
Apr 14, 1898 – Dec 11, 1983
Inventor of negative feedback amplifier

… he got his inspiration to invent the negative feedback amplifier when he was traveling from New Jersey to New York City by taking a ferry to cross the Hudson River in August 1927. Having nothing to write on he sketched his thoughts on a misprinted page of the New York Times and then signed and dated it….

Stabilized Feed-Back Amplifiers

H. S. BLACK, MEMBER A.I.E.E.

Classic Paper

This paper describes and explains the theory of the feed-back principle and demonstrates how stability of amplification, reduction of modulation products, and certain other advantages follow when stabilized feed-back is applied to an amplifier. The underlying principle of design by means of which "singing" is avoided also is set forth. The paper concludes with some examples of results obtained on amplifiers which have been built employing this new principle.

Due to advances in vacuum-tube development and amplifier technique, it now is possible to secure any desired amplification of the electrical waves used in the communication field. When many amplifiers are worked in tandem, however, it becomes difficult to keep the over-all circuit efficiency constant, variations in battery potentials and currents, small when considered individually, adding up to produce serious transmission changes for the over-all circuit. Furthermore, although it has remarkably linear properties, when the modern vacuum tube amplifier is used to handle a number of carrier telephone channels, extraneous frequencies are generated which cause interference between the channels. To keep this interference within proper bounds involves serious sacrifice of effective amplifier capacity or the use of a push-pull arrangement which, while giving some increase in capacity, adds to maintenance difficulty.

However, by building an amplifier whose gain is made deliberately, say 40 decibels higher than necessary (10000 fold excess on energy basis) and then feeding the output back to the input in such a way as to throw away the excess gain, it has been found possible to effect extraordinary improvement in constancy of amplification and freedom from nonlinearity. By employing this feed-back principle, amplifiers have been built and used whose gain varied less than 0.01 db with a change in plate voltage from 240 to 260 volts and whose modulation products were 75 db below the signal output at full load. For an amplifier of conventional design and comparable size this change in plate voltage would have produced about 0.7 db variation while the modulation products would have been only 35 db down; in other words, 40 db reduction in modulation products was effected. (On an energy basis the reduction was 10 000 fold.)

Stabilized feed-back possesses other advantages including reduced delay and delay distortion, reduced noise disturbance from the power supply circuits and various other features best appreciated by practical designers of amplifiers.

It is far from a simple proposition to employ feedback in this way because of the very special control required of phase shifts in the amplifier and feedback circuits, not only throughout the useful frequency band but for a wide range of frequencies above and below this band. Unless these relations are maintained, singing will occur, usually at frequencies outside the useful range. Once having achieved a design, however, in which proper phase relations are secured, experience has demonstrated that the performance obtained is perfectly reliable.

The carrier-in-cable system dealt with in a recent Institute paper (Carrier in Cables by A. B. Clark and B. W. Kendall, A.I.E.E. Trans., Dec. 1933, p. 1050) involves many amplifiers in tandem with many telephone channels passing through each amplifier and constitutes, therefore, an ideal field for application of this feed-back principle. A field trial of this system was made at Morristown, New Jersey, in which 70 of these amplifiers were operated in tandem. The results of this trial were highly satisfactory and demonstrated conclusively the correctness of the theory and the practicability of its commercial application.

Circuit Arrangement

In the amplifier of Fig. 1, a portion of the output is returned to the input to produce feed-back action. The upper branch, called the μ circuit, is represented as containing active elements such as an amplifier while the lower branch, called the β-circuit, is shown as a passive network. The way a voltage is modified after once traversing each circuit is denoted μ and β, respectively, and the product, $\mu\beta$, represents how a voltage is modified after making a single journey around amplifier and feed-back circuits. Both μ and β are complex quantities, functions of frequency, and in the generalized concept either or both may be greater or less in absolute value than unity: (μ is not used in the sense that it is used sometimes, namely, to denote the amplification constant of a particular tube, but as the complex ratio of the output to the input voltage of the amplifier circuit).

This paper is reprinted from *Electrical Engineering*, vol. 53, no. 1, pp. 114–120, Jan. 1934.
Publisher Item Identifier S 0018-9219(99)01186-X.

0018–9219/99$10.00 © 1999 IEEE

Authorized licensed use limited to: IEEE Xplore. Downloaded on January 6, 2009 at 22:11 from IEEE Xplore. Restrictions apply.

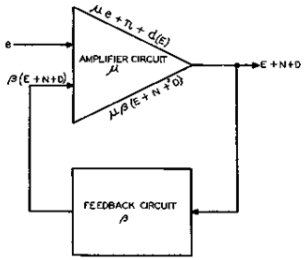

Fig. 1. Amplifier system with feed-back. e, Signal input voltage. μ, propagation of amplifier circuit. μe, signal output voltage without feed-back. n, noise output voltage without feed-back. d(E), distortion output voltage without feed-back. β, propagation of feed-back circuit. E, signal output voltage with feed-back. N, noise output voltage with feed-back. D, distortion output voltage with feed-back. The output voltage with feed-back is E + N + D and is the sum of μe + n + d(E), the value without feed-back plus $\mu\beta$[E + N + D] due to feed-back. $E + N + D = \mu e + n + d(E) + \mu\beta[E + N + D]$ $[E + N + D](1-\mu\beta) = \mu e + n + d(E)$ $E+N+D = \frac{\mu e}{1-\mu\beta} + \frac{n}{1-\mu\beta} + \frac{d(E)}{1-\mu\beta}$ If $|\mu\beta| \gg 1$. $E \doteq \frac{e}{\beta}$. Under this condition the amplification is independent of μ but does depend upon β. Consequently the over-all characteristic will be controlled by the feed-back circuit which may include equalizers or other corrective networks.

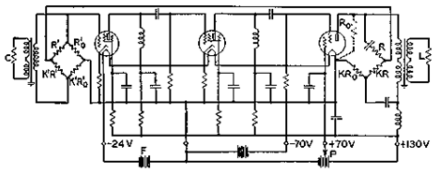

Fig. 2. Circuit of a negative feed-back amplifier.

General Equation

In Fig. 1, β is zero without feed-back and a signal voltage, e_0, applied to the input of the μ-circuit produces an output voltage. This is made up of what is wanted, the amplified signal, E_0, and components that are not wanted, namely, noise and distortion designated N_0 and D_0 and assumed to be generated within the amplifier. It is further assumed that the noise is independent of the signal and the distortion of modulation a function *only of the signal output*. Using the notation of Fig. 1, the output without feed-back may be written as

$$E_0 + N_0 + D_0 = \mu e_0 + n + d(E_0) \tag{1}$$

where zero subscripts refer to conditions without feed-back.

With feed-back, β is not zero and the input to the μ-circuit becomes $e_0 + \beta(E + N + D)$. The output is $E + N + D$ and is equal to $\mu[e_0 + \beta(E + N + D)] + n + dE$ or

$$E + N + D = \frac{\mu e_0}{1 - \mu\beta} + \frac{n}{1 - \mu\beta} + \frac{d(E)}{1 - \mu\beta}. \tag{2}$$

In the output signal, noise and modulation are divided by $(1 - \mu\beta)$, and assuming $|1 - \mu\beta| > 1$, all are reduced.

Change in Gain Due to Feed-Back

From (2), the amplification with feed-back equals the amplification without feed-back divided by $(1 - \mu\beta)$. The effect of adding feed-back, therefore, usually is to change the gain of the amplifier and this change will be expressed as

$$G_{CF} = 20 \log_{10} \left| \frac{1}{1 - \mu\beta} \right| \tag{3}$$

where G_{CF} is *db change in gain due to feed-back*. As a quantitative measure of the effect of feed-back $1/1 - \mu\beta$ will be used and the feed-back referred to as *positive feed-back* or *negative feed-back* according as the absolute value of $1/1 - \mu\beta$ is greater or less than unity. Positive feed-back increases the gain of the amplifier; negative feed-back reduces it. The term feed-back is not limited merely to those cases where the absolute value of $1/1 - \mu\beta$ is other than unity.

From $\mu\beta = |\mu\beta|\Phi$ and (3), it may be shown that

$$10 - \frac{G_{CF}}{10} = 1 - 2|\mu\beta|\cos\Phi + |\mu\beta|^2 \tag{4}$$

which is the equation for a family of concentric circles of radius $10 - G_{CF}/10$ about the point 1, 0. Fig. 3 is a polar diagram of the vector field of $\mu\beta = |\mu\beta|\Phi$. Using rectangular instead of polar coördinates, Fig. 4 corresponds to Fig. 3 and may be regarded as a diagram of the field of $\mu\beta$ where the parameter is db change in gain due to feed-back. From these diagrams all of the essential properties of feed-back action can be obtained such as change in amplification, effect on linearity, change in stability due to variations in various parts of the system, reduction of noise, etc. Certain significant boundaries have been designated similarly on both figures.

For example, boundary A is the locus of zero change in gain due to feed-back. Along this parametric contour line where the absolute magnitude of amplification is not changed by feed-back action, values of $|\mu\beta|$ range from zero to two and the phase shift, Φ around the amplifier and feed-back circuits equal $\cos^{-1}|\mu\beta/2$ and, therefore, lies between −90 deg and +90 deg. For all conditions inside or above this boundary, the gain with feed-back is increased; outside or below, the gain is decreased.

Authorized licensed use limited to: IEEE Xplore. Downloaded on January 6, 2009 at 22:11 from IEEE Xplore. Restrictions apply.

Inverter circuit

$$\frac{V_O}{V_{IN}} = -\frac{R_2}{R_1}$$

NEGATIVE FEEDBACK

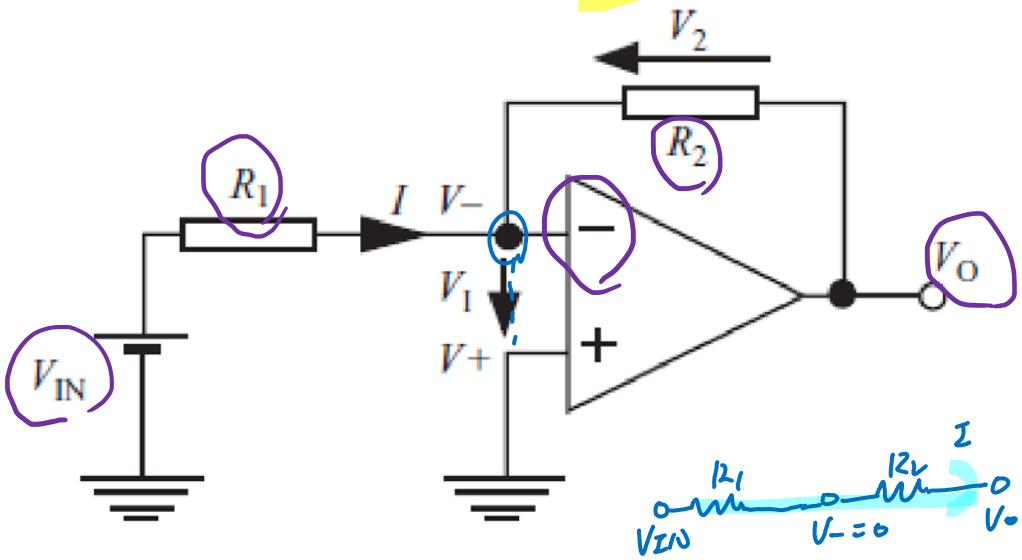

$$\frac{V_O}{V_{IN}} = -\frac{R_2}{R_1}$$

Figure 7.1 The inverter circuit

Noninverting circuit

NEGATIVE FEEDBACK → Linear operation region ($|V_o| < V_s$ expected)

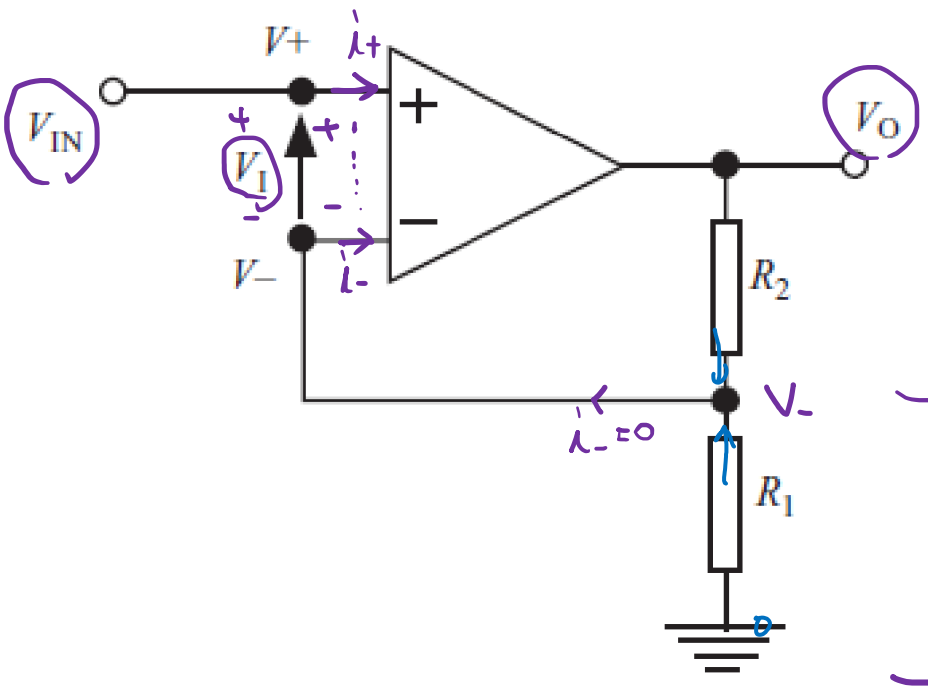

Figure 7.7 A noninverting circuit

→ Virtual short ckt $V_I = 0$ $= V_+ = V_-$

$$\begin{cases} V_+ = V_- \\ V_I = 0 \end{cases}$$

Ideal opamp

$i_+ = i_- = 0$

→ Voltage divider $V_+ = V_- = \frac{R_1}{R_1+R_2} V_o$

$$V_- = V_o \cdot \frac{R_1}{R_1+R_2}$$

→ $V_{IN} = V_+ = V_-$ (virtual short ckt)

→ $$\frac{V_o}{V_{IN}} = \frac{R_1+R_2}{R_1} = 1 + \frac{R_2}{R_1}$$

$V_{IN} = V_+$

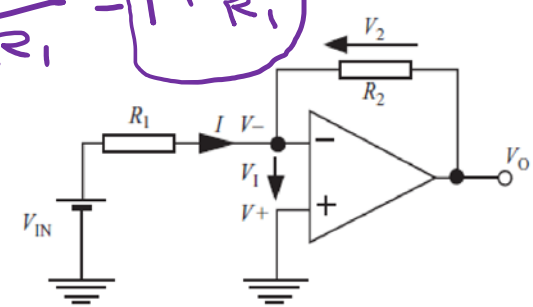

Figure 7.1 The inverter circuit

Model of noninverting circuit

$$\frac{V_O}{V_{IN}} = 1 + \frac{R_2}{R_1}$$

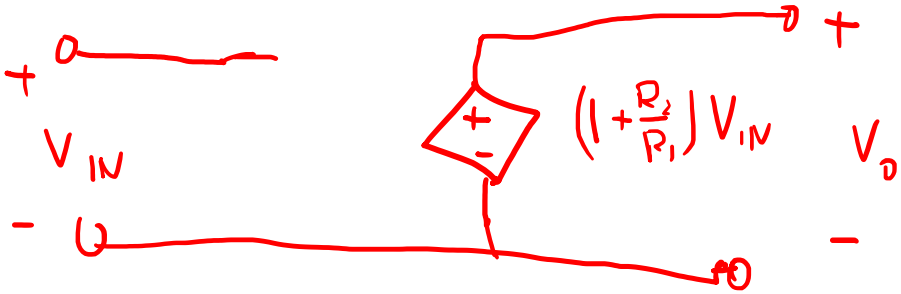

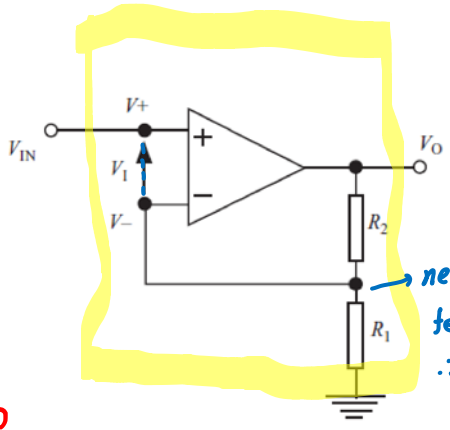

negative feedback

∴ virtual short circuit

$V_I = 0$

∴ $V_+ = V_-$

$V_{IN} = V_+ = V_-$ $\quad V_- = \frac{R_1}{R_1+R_2} V_O$

$$\frac{V_O}{V_{IN}} = \frac{V_O}{\frac{R_1}{R_1+R_2} V_O} = \frac{R_1+R_2}{R_1} = 1 + \frac{R_2}{R_1}$$

Figure 7.7 A noninverting circuit

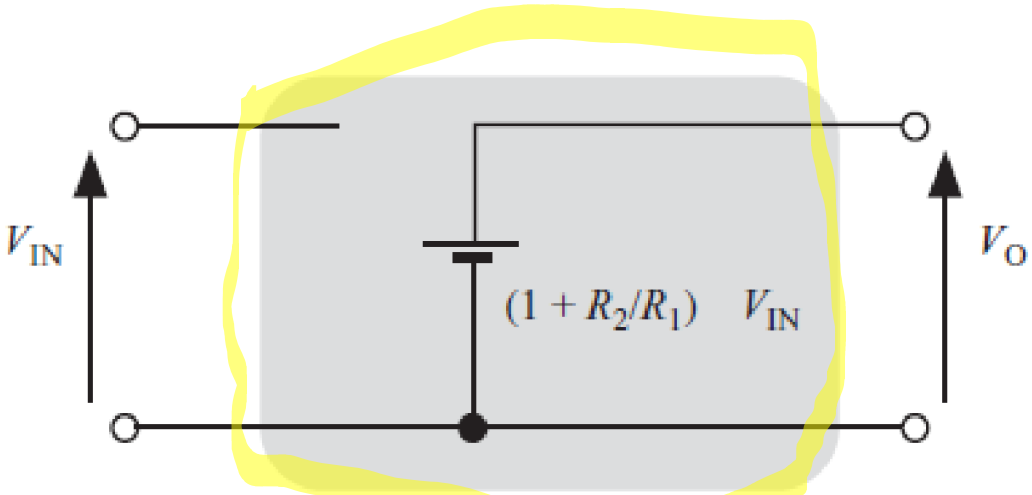

Figure 7.8 A model of the noninverting circuit of Figure 7.7

Quiz

For each of the circuits shown in the following figures, find the value of the voltage *V*. Assume that the limits to the output voltage of the opamp are +10 and −10V.

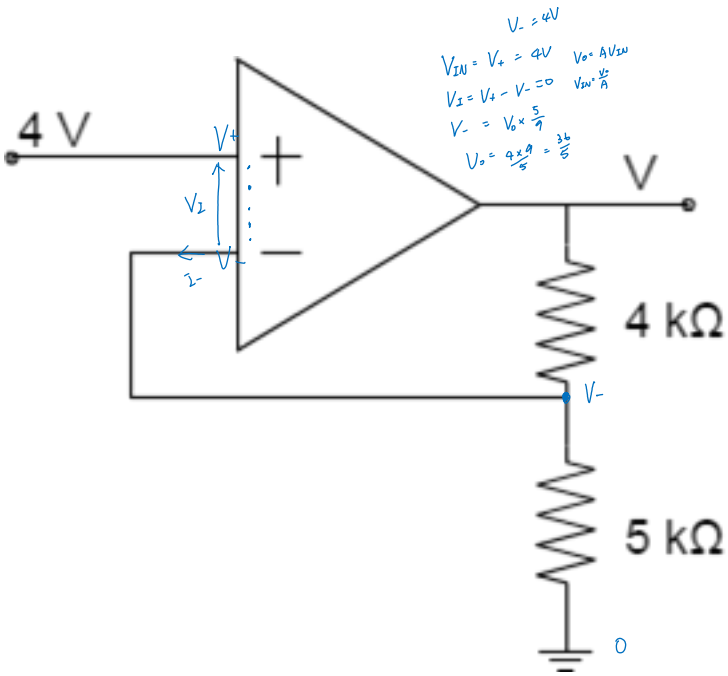

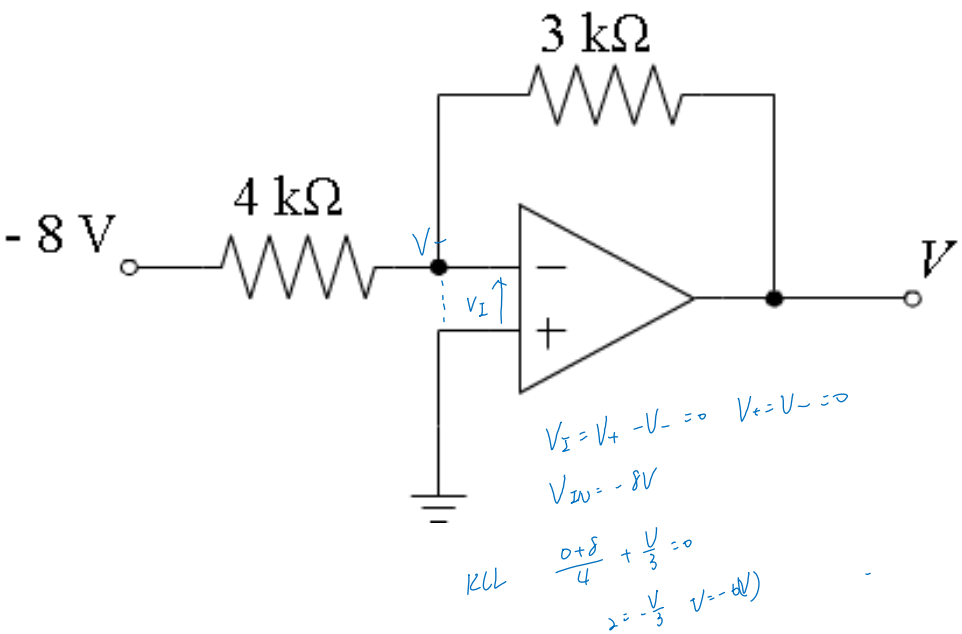

Quiz Review

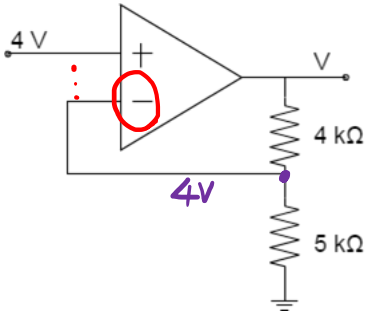

$V_I = 0$

NEGATIVE FEEDBACK

↓

Linear oper.

↓

Virtual Short ckt.

$V_I = 0 \therefore V_+ = V_-$

$V_- = \frac{5}{9} V = 4$

$V_- = V_+ = 4(V)$ $\quad V = \frac{36}{5}(V)$

$V \cdot \frac{5}{4+5} = 4$

$\Rightarrow V = \frac{36}{5} \ (V)$

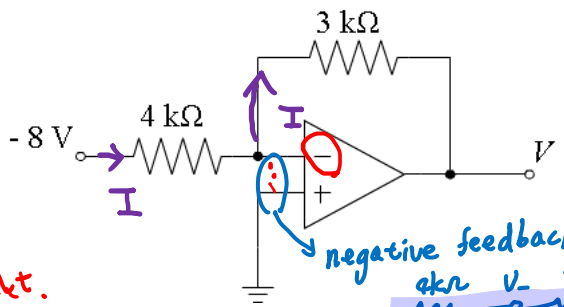

negative feedback $V_I = 0$ $V_+ = V_- = 0$

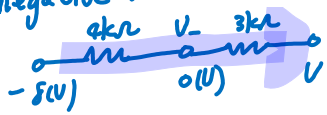

$V_- = V_+ = 0$ $\quad \frac{-8-0}{4} + \frac{V-0}{3} = 0$

$V = 6 \ (V)$

$I = \frac{-8-0}{4} = -2 \ mA$

$V = V_- - I \times 3$

$= 6 \ (V)$

Voltage follower

Non-inverter

$R_2 \to 0$

$R_1 \to \infty$

$\Rightarrow \frac{V_o}{V_{IN}} = 1 + \frac{R_2}{R_1} = 1$

Virtual Short Ckt

$V_o = V_{IN}$

NEGATIVE FB

→ Virtual Short

→ $V_I = 0$

$V_{IN} = V_+ = V_- = V_o$

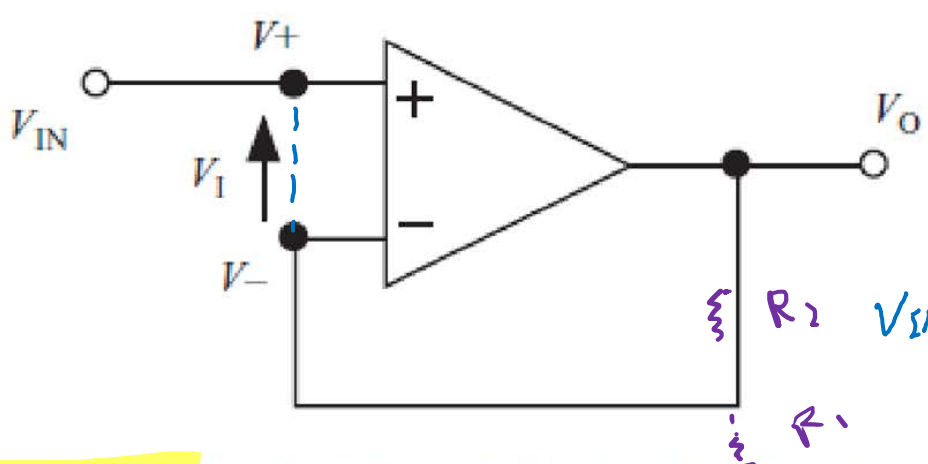

Figure 7.9 The noninverting circuit of Figure 7.7, with R_1 = infinity and $R_2 = 0$, provides a voltage follower, with $V_O = V_{IN}$

Voltage follower

"Buffer"

$V_o = V_x \cdot \frac{10}{10+10}$

$= V_x/2$

$I = V_x/20$

$V_o = V_x$

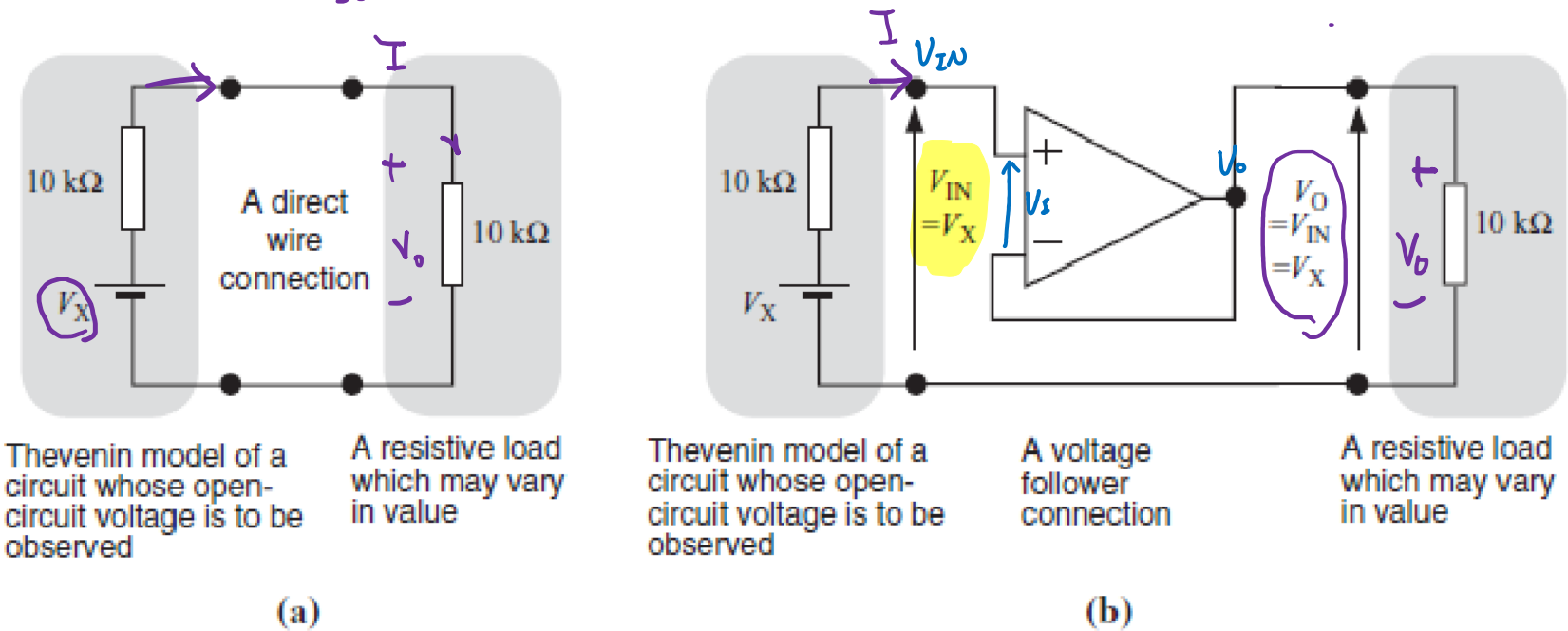

Figure 7.10 An example to show that although a direct connection (a) ensures identical voltages at each end of the *connection*, a voltage follower (b) ensures that no current is drawn from the circuit being observed and delivers a voltage V_X irrespective of the load resistance

Digital-to-analog (D-A) conversion

analog

Continuous

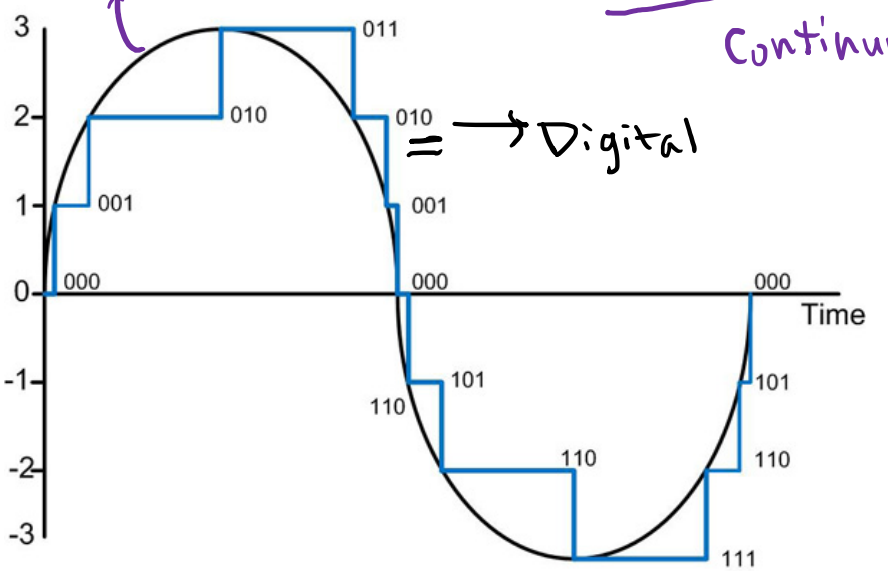

= → Digital

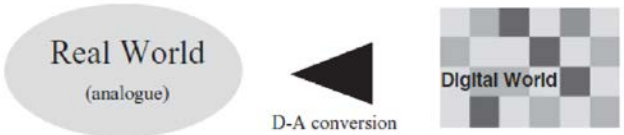

Figure 7.11 It is often necessary for information in digital form to be transformed to analog form

Pixel

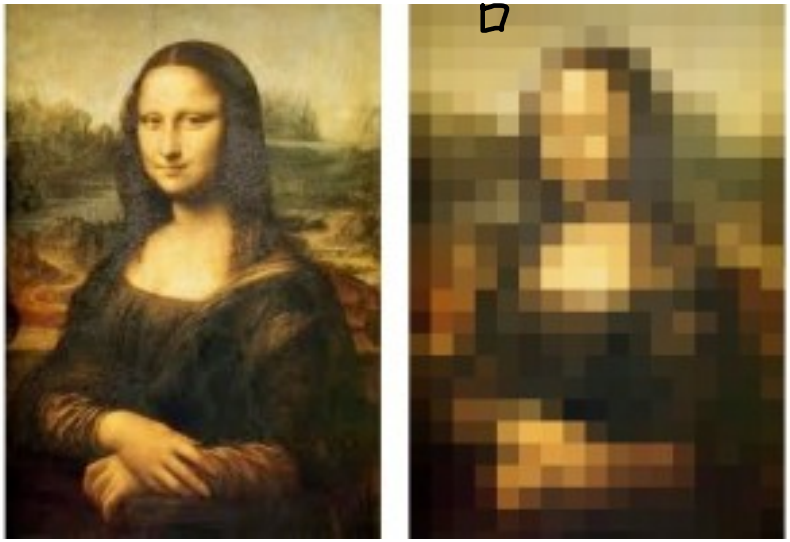

Digital-to-analog (D-A) conversion

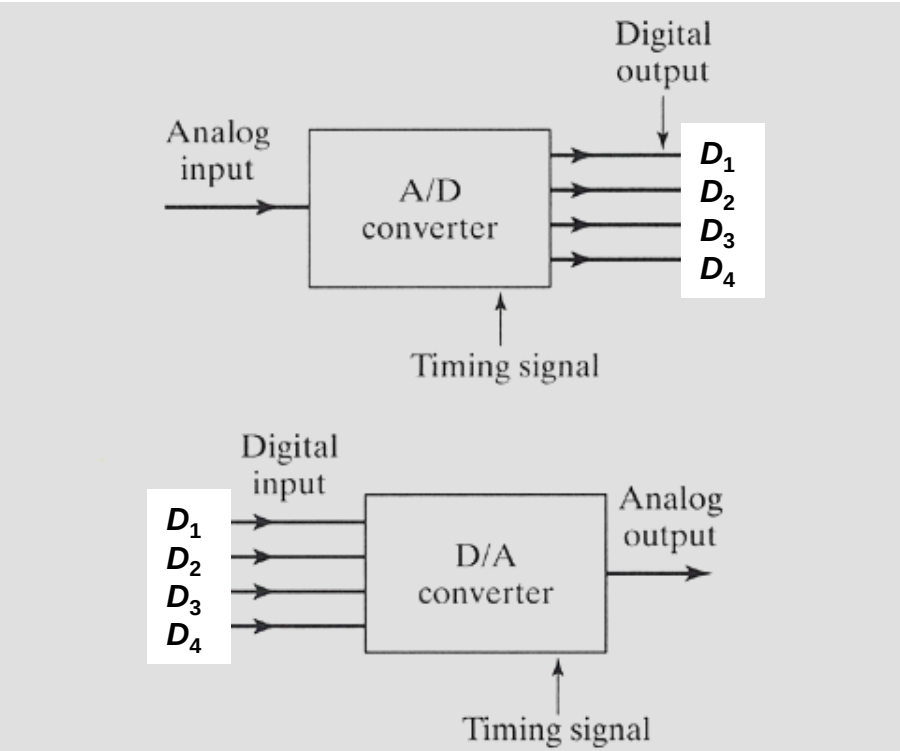

FIGURE 8.12 A/D and D/A converters.

N	D_1	D_2	D_3	D_4
	0			

Digital-to-analog (D-A) conversion

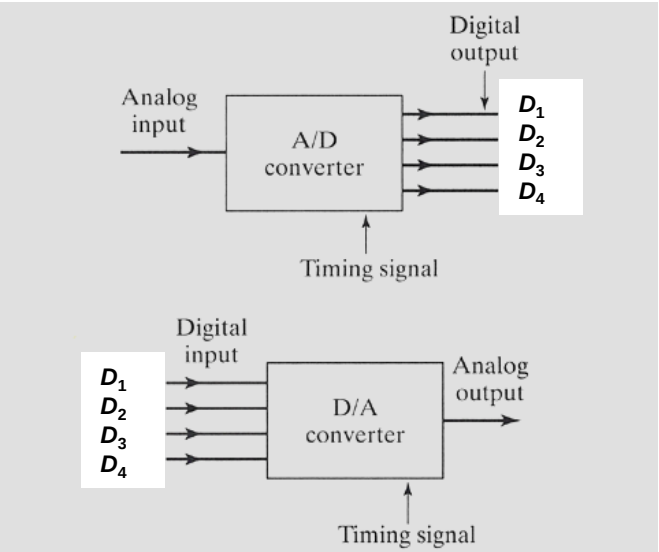

FIGURE 8.12 A/D and D/A converters.

$[D_1 \quad D_2 \quad D_3 \quad D_4]$ Binary

$\hookrightarrow N$ decimal

$$N = 8D_1 + 4D_2 + 2D_3 + 1 \cdot D_4$$

$$2^3 \quad 2^2 \quad 2^1 \quad 2^0$$

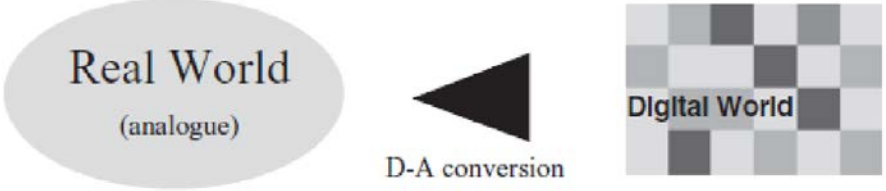

Figure 7.11 It is often necessary for information in digital form to be transformed to analog form

Digital-to-analog (D-A) conversion

$$V_1 = D_1 \cdot V_s = \begin{cases} 0, & \text{if } D_1 = 0 \\ V_s, & \text{if } D_1 = 1 \end{cases}$$

$$V_2 = D_2 \cdot V_s$$

$$V_3 = D_3 \cdot V_s$$

$$V_4 = D_4 \cdot V_s$$

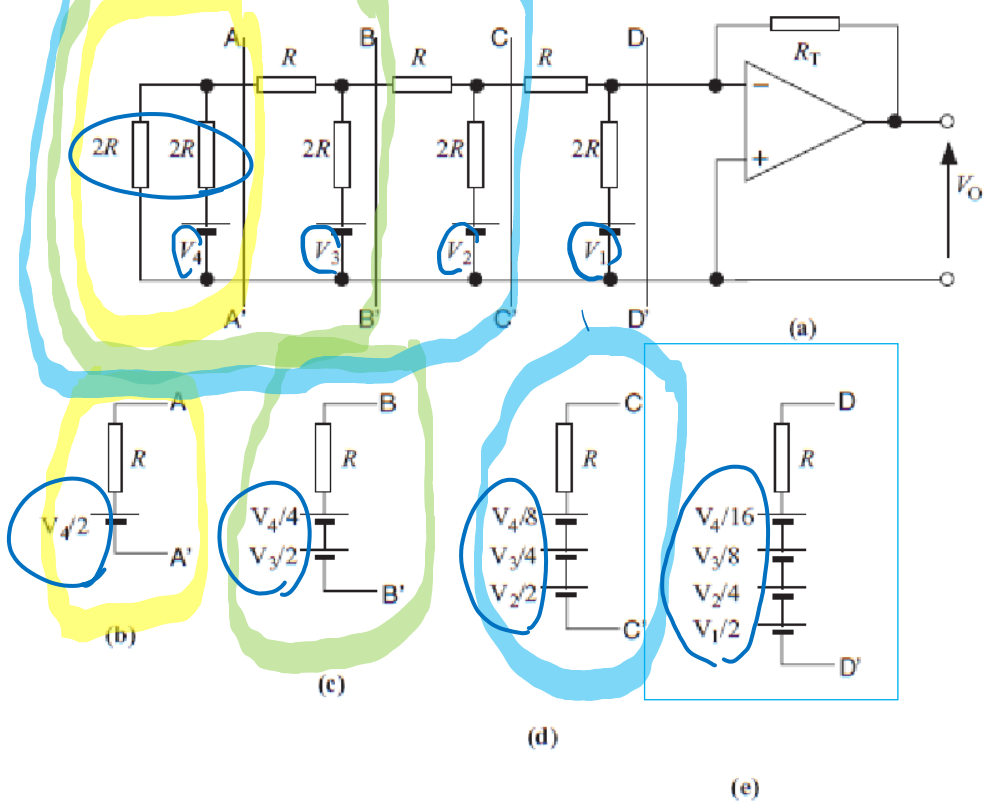

Figure 7.12 The circuit (a) of a D–A converter. Shown in (b), (c), (d) and (e) are the Thévenin models of that part of the circuit lying to the left of the various boundaries

Digital-to-analog (D-A) conversion

$$V_0 = -V_{IN} \cdot \frac{R_T}{R}$$

$$= -\frac{R_T V_s}{16 R} \underbrace{(8D_1 + 4D_2 + 2D_3 + D_4)}_{N}$$

$$V_0 = k N$$

$$V_0 = V_{IN} \frac{R_T}{R}$$

$$=$$

$$V_i = D_i \cdot V_s$$

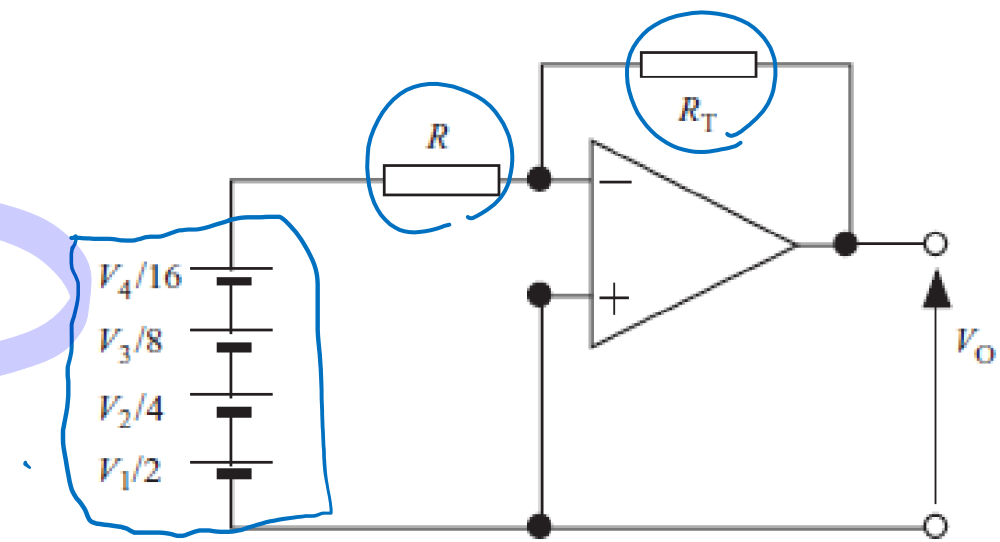

Figure 7.13 The D–A converter of Figure 7.12 modelled as an inverter circuit

Voltage summing

NEGATIVE Feedback

→ Virtual Short Ckt

$V_- = V_+ = 0$

$$I = \frac{V_1 - V_-}{R} + \frac{V_2 - V_-}{R} + \frac{V_3 - V_-}{R} = (V_1 + V_2 + V_3)\frac{1}{R}$$

$$\Rightarrow V_o = 0 - IR_R = -\frac{R_R}{R}(V_1 + V_2 + V_3)$$

$$\rightarrow V_o = k(V_1 + V_2 + V_3)$$

$$V_o = -IR_R = -\frac{R_R}{R}(V_1 + V_2 + V_3)$$

$$V_o = k(V_1 + V_2 + V_3)$$

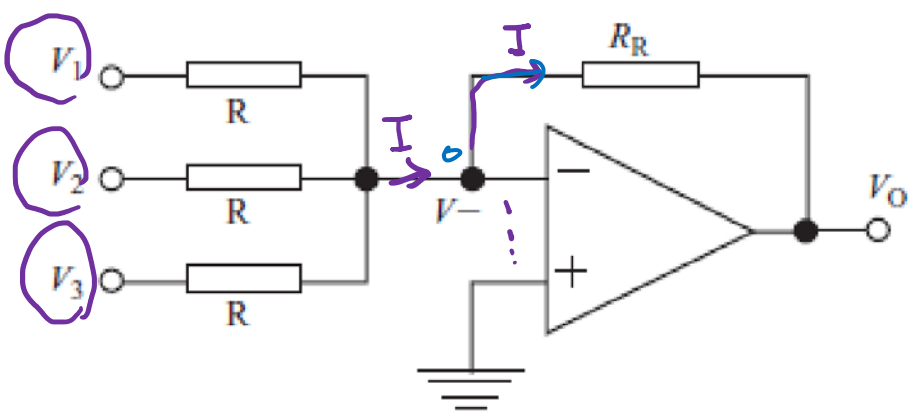

Figure 7.14 A summing amplifier

Example 7.2

$$I = \frac{V_1}{2k} + \frac{V_2}{5k} + \frac{V_3}{10k}$$

$$V_o = 0 - I \cdot 1k$$

$$= -\underbrace{(0.5V_1 + 0.2V_2 + 0.1V_3)}_{\text{Weighted Sum}}$$

$$\frac{V_1}{2} + \frac{V_2}{5} + \frac{V_3}{10} + \frac{V_o}{1} = 0$$

$$V_o = -(0.5V_1 + 0.2V_2 + 0.1V_3)$$

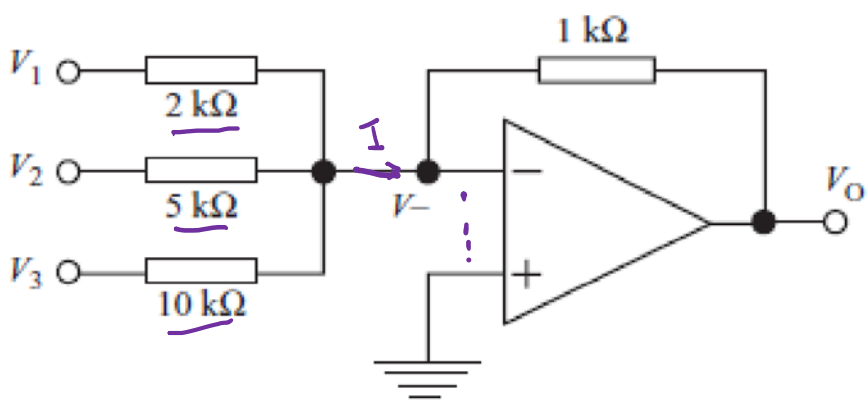

Figure 7.15 A weighted summer

Example 7.3

Example 7.3

To measure upto 5 V
R = ?

Convert an Ammeter into a Voltmeter

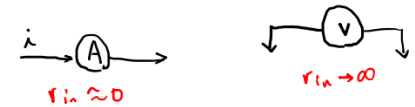

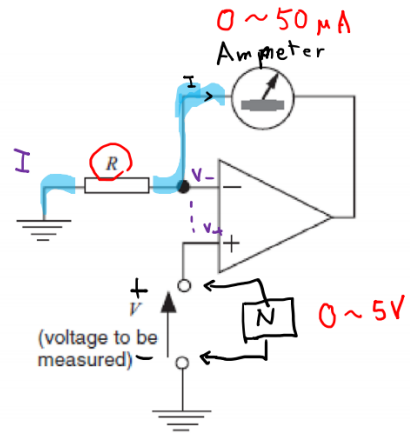

Figure 7.16 A high-input-resistance voltmeter

Negative Feedback

→ Virtual short Ckt

→ $V_- = V_+ = V$

→ $I = \frac{0 - V_-}{R} = -\frac{V}{R}$ (5V)

↑ 50 μA

→ $R = \frac{5V}{50\,\mu A} = 100\ k\Omega$

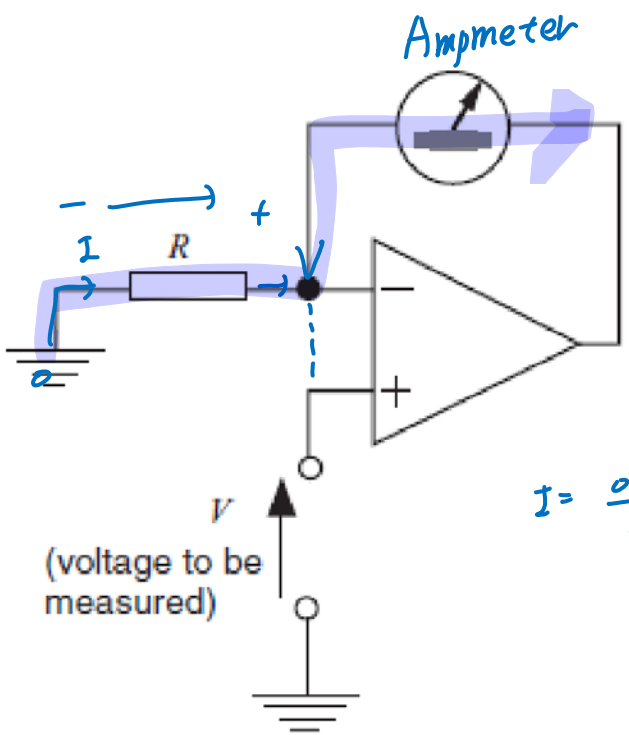

virtual short circuit

$\therefore V_2 = 0 \Rightarrow V_+ = V_- = V$

$I = \frac{0 - V}{R} = -\frac{V}{R}$

Figure 7.16 A high-input-resistance voltmeter

Summary

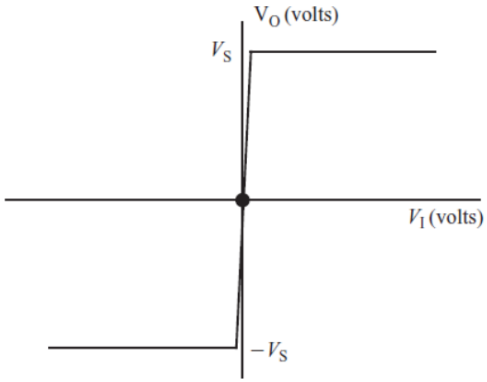

Figure 6.2 The form of the relation between the input V_I and output V_O voltages of an opamp

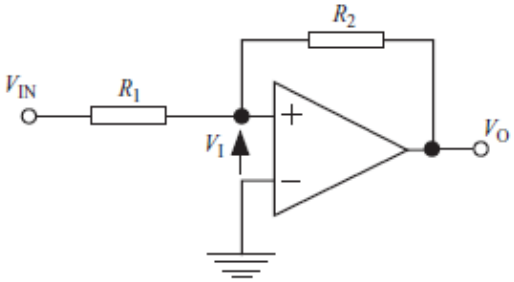

Figure 6.11 Another trigger circuit whose output state can be controlled by an input voltage

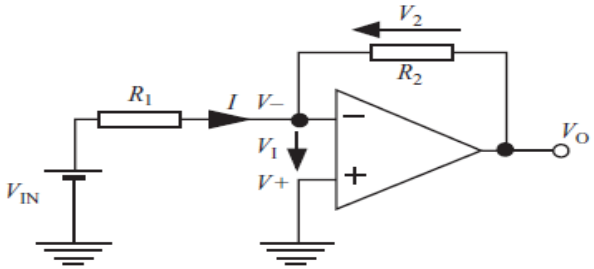

Figure 7.1 The inverter circuit