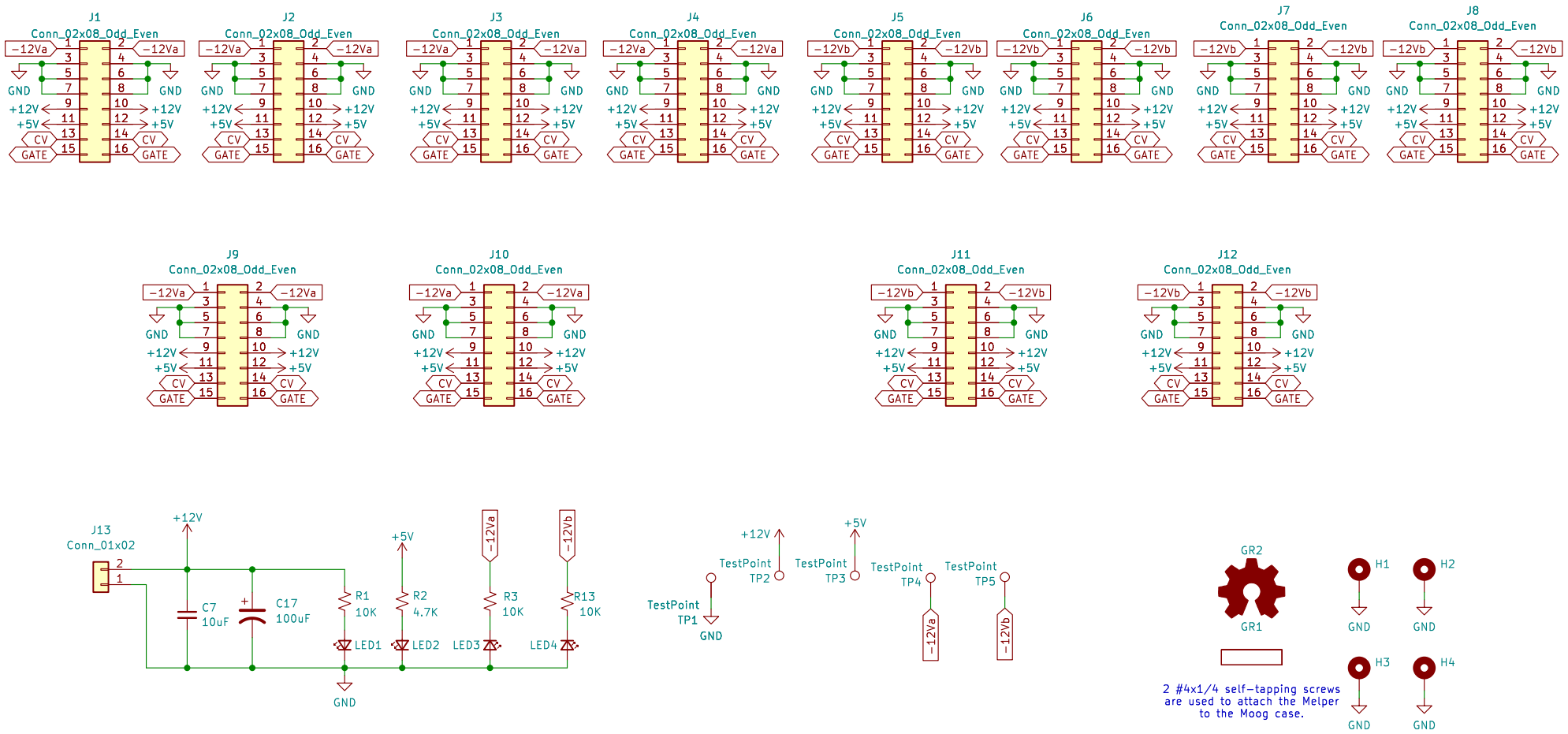


Sheet: /
File: SuperMelper.kicad_sch

**Title: The Melper**

| | | |
|---|---|---|
| Size: A4 | Date: | **Rev: 1.0** |
| KiCad E.D.A. 8.0.8 | | Id: 1/2 |

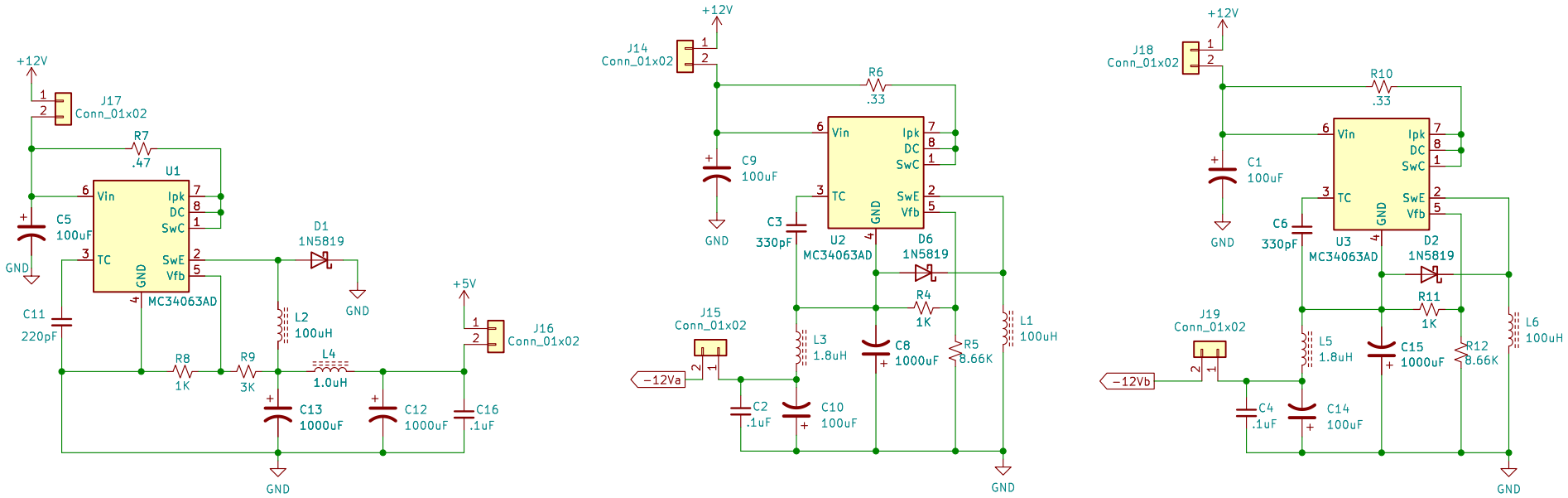


Sheet: /Regulators/
File: regulators.kicad_sch

**Title: Super Melper**

| | | |
|---|---|---|
| Size: A4 | Date: | **Rev: 1.0** |
| KiCad E.D.A. 8.0.8 | | Id: 2/2 |