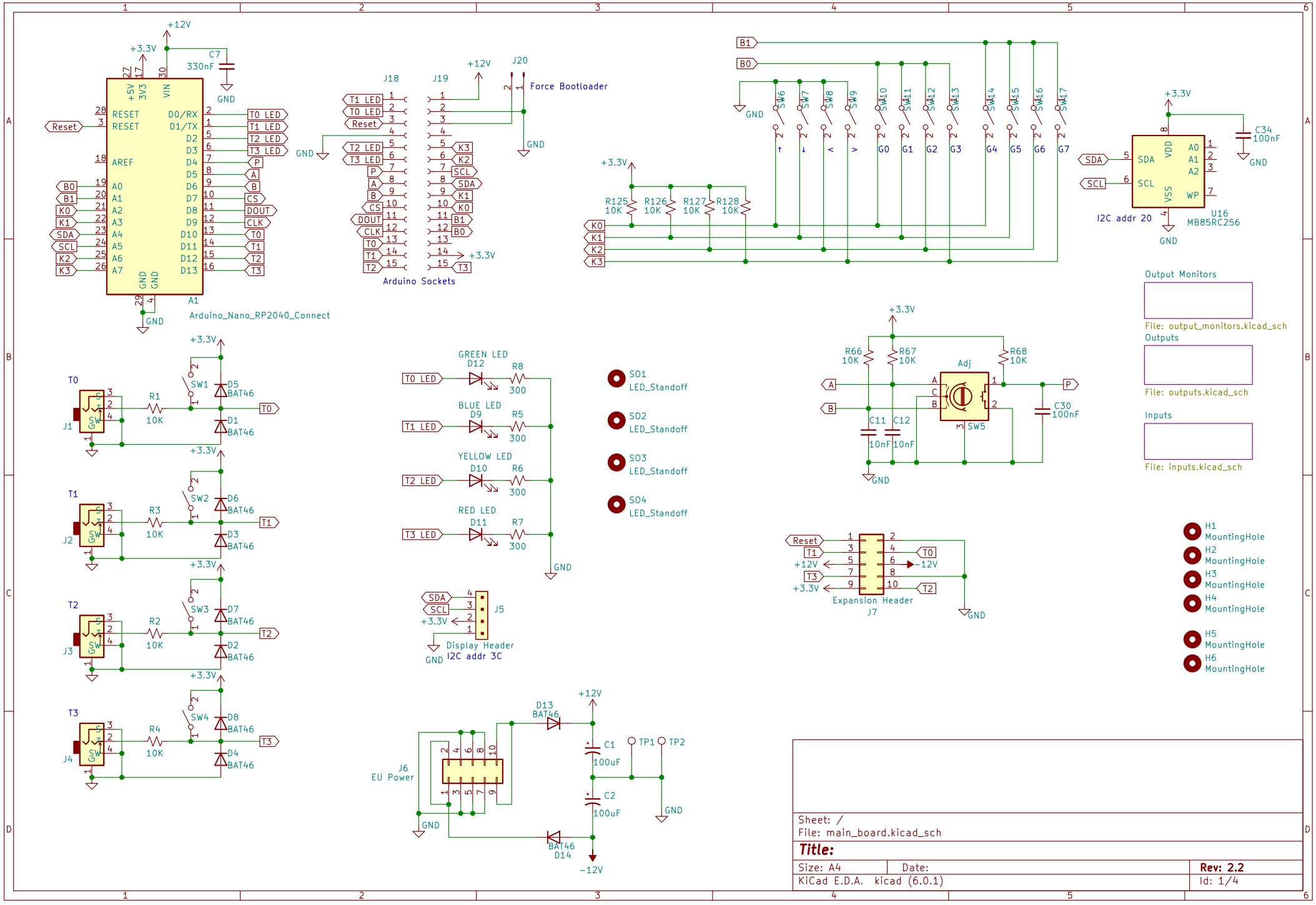
+12V
+3.3V
C7
330nF
GND
RESET
RESET
AREF
D0/RX
D1/TX
VIN
Reset
A1
Arduino_Nano_RP2040_Connect
J18
J19
J20
Force Bootloader
Arduino Sockets
T0 LED
T1 LED
T2 LED
T3 LED
Output Monitors
File: output_monitors.kicad_sch
Outputs
File: outputs.kicad_sch
Inputs
File: inputs.kicad_sch
U16
MB85RC256
I2C addr 20
C34
100nF
R125
R126
R127
R128
10K
SW1
SW2
SW3
SW4
SW5
D5
D6
D7
D8
D1
D2
D3
D4
BAT46
R1
R2
R3
R4
J1
J2
J3
J4
GREEN LED
BLUE LED
YELLOW LED
RED LED
D12
D9
D10
D11
R8
R5
R6
R7
300
SO1
SO2
SO3
SO4
LED_Standoff
R66
R67
R68
Adj
C11
C12
C30
10nF
Display Header
I2C addr 3C
J5
Expansion Header
J7
H1
H2
H3
H4
H5
H6
MountingHole
J6
EU Power
D13
D14
C1
C2
100uF
TP1
TP2
-12V
Sheet: /
File: main_board.kicad_sch
Title:
Size: A4
Date:
Rev: 2.2
KiCad E.D.A. kicad (6.0.1)
Id: 1/4

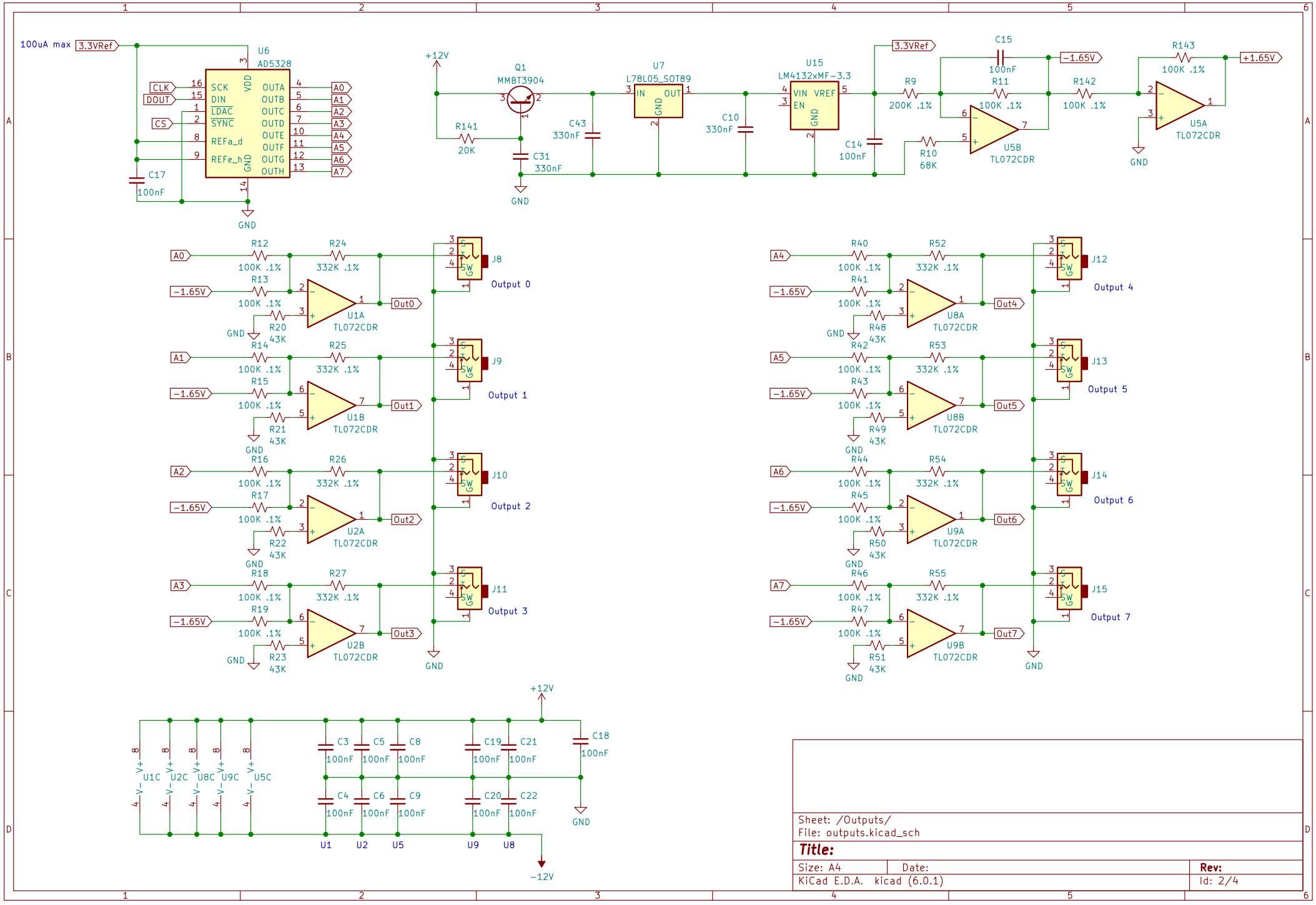

Sheet: /Outputs/
File: outputs.kicad_sch

Title:

Size: A4	Date:	Rev:
KiCad E.D.A. kicad (6.0.1)		Id: 2/4

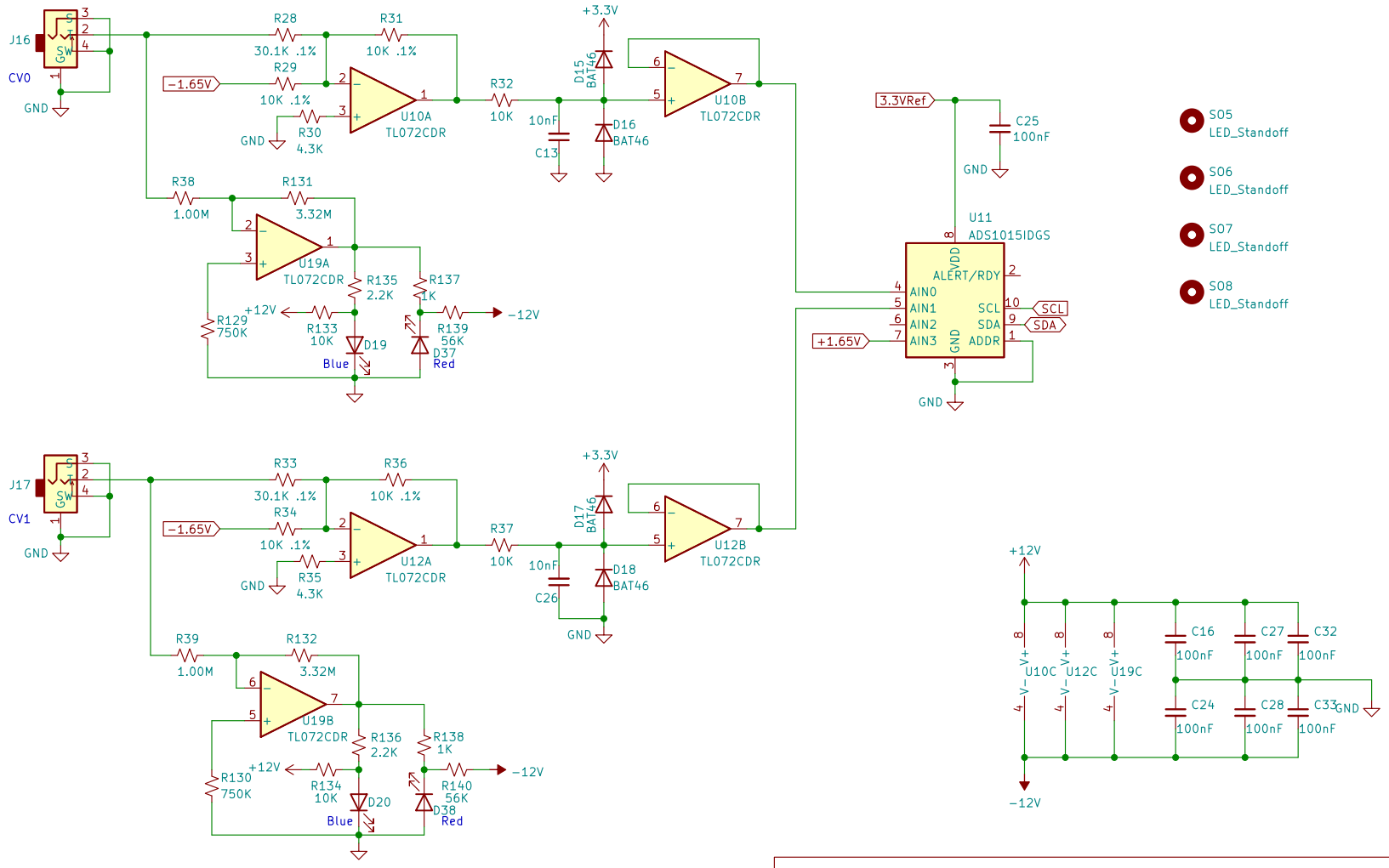

Sheet: /Inputs/
File: inputs.kicad_sch

Title:

Size: A4	Date:	Rev:
KiCad E.D.A. kicad (6.0.1)		Id: 3/4

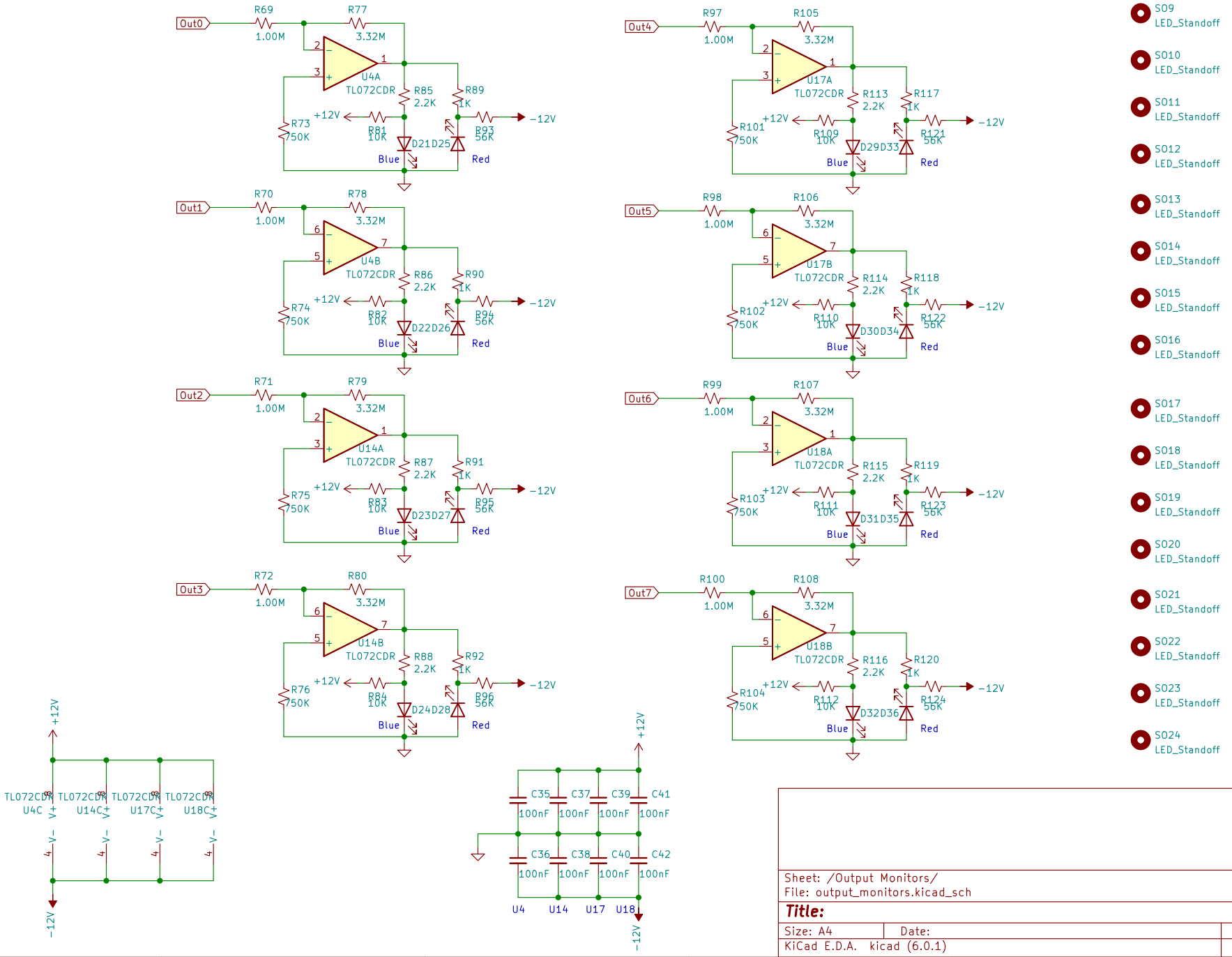

Sheet: /Output Monitors/
File: output_monitors.kicad_sch

Title:

Size: A4	Date:	Rev:
KiCad E.D.A. kicad (6.0.1)		Id: 4/4