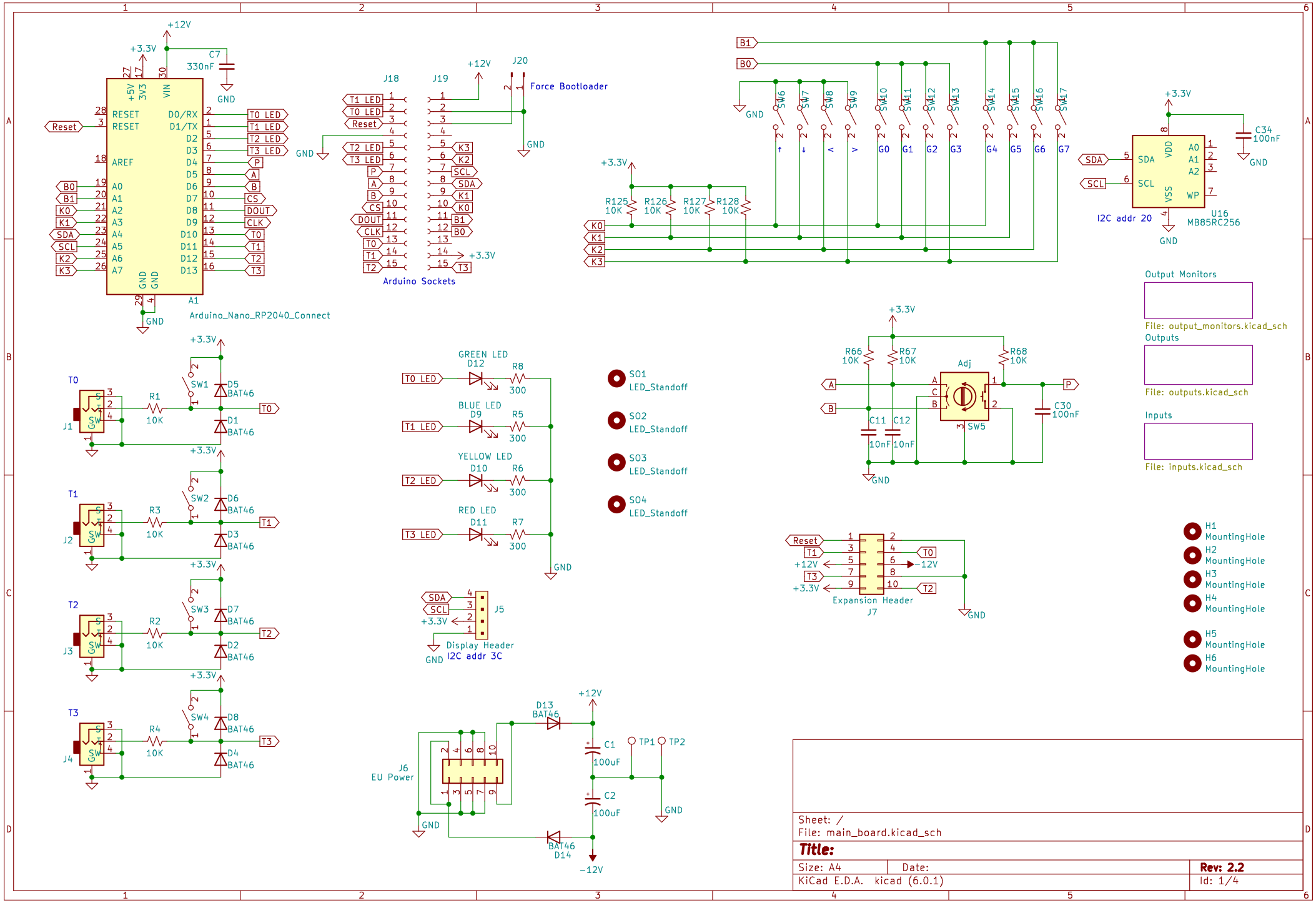
Arduino_Nano_RP2040_Connect
A1
RESET
RESET
AREF
D0/RX
D1/TX
VIN
+5V
3V3
GND
C7
330nF
+12V
+3.3V
Reset
B0
B1
K0
K1
SDA
SCL
K2
K3
T0 LED
T1 LED
T2 LED
T3 LED
P
A
B
CS
DOUT
CLK
T0
T1
T2
T3
J18
J19
J20
Force Bootloader
Arduino Sockets
SW6
SW7
SW8
SW9
SW10
SW11
SW12
SW13
SW14
SW15
SW16
SW17
G0
G1
G2
G3
G4
G5
G6
G7
R125 10K
R126 10K
R127 10K
R128 10K
U16
MB85RC256
I2C addr 20
C34
100nF
Output Monitors
File: output_monitors.kicad_sch
Outputs
File: outputs.kicad_sch
Inputs
File: inputs.kicad_sch
R66 10K
R67 10K
R68 10K
Adj
SW5
C11 10nF
C12 10nF
C30 100nF
SW1
SW2
SW3
SW4
D5 BAT46
D1 BAT46
D6 BAT46
D3 BAT46
D7 BAT46
D2 BAT46
D8 BAT46
D4 BAT46
R1 10K
R3 10K
R2 10K
R4 10K
GREEN LED
D12
R8 300
BLUE LED
D9
R5 300
YELLOW LED
D10
R6 300
RED LED
D11
R7 300
SO1
LED_Standoff
SO2
LED_Standoff
SO3
LED_Standoff
SO4
LED_Standoff
J5
Display Header
I2C addr 3C
Expansion Header
J7
-12V
H1
MountingHole
H2
MountingHole
H3
MountingHole
H4
MountingHole
H5
MountingHole
H6
MountingHole
D13
BAT46
D14
BAT46
C1
100uF
C2
100uF
TP1
TP2
J6
EU Power
Sheet: /
File: main_board.kicad_sch
Title:
Size: A4
Date:
Rev: 2.2
KiCad E.D.A. kicad (6.0.1)
Id: 1/4

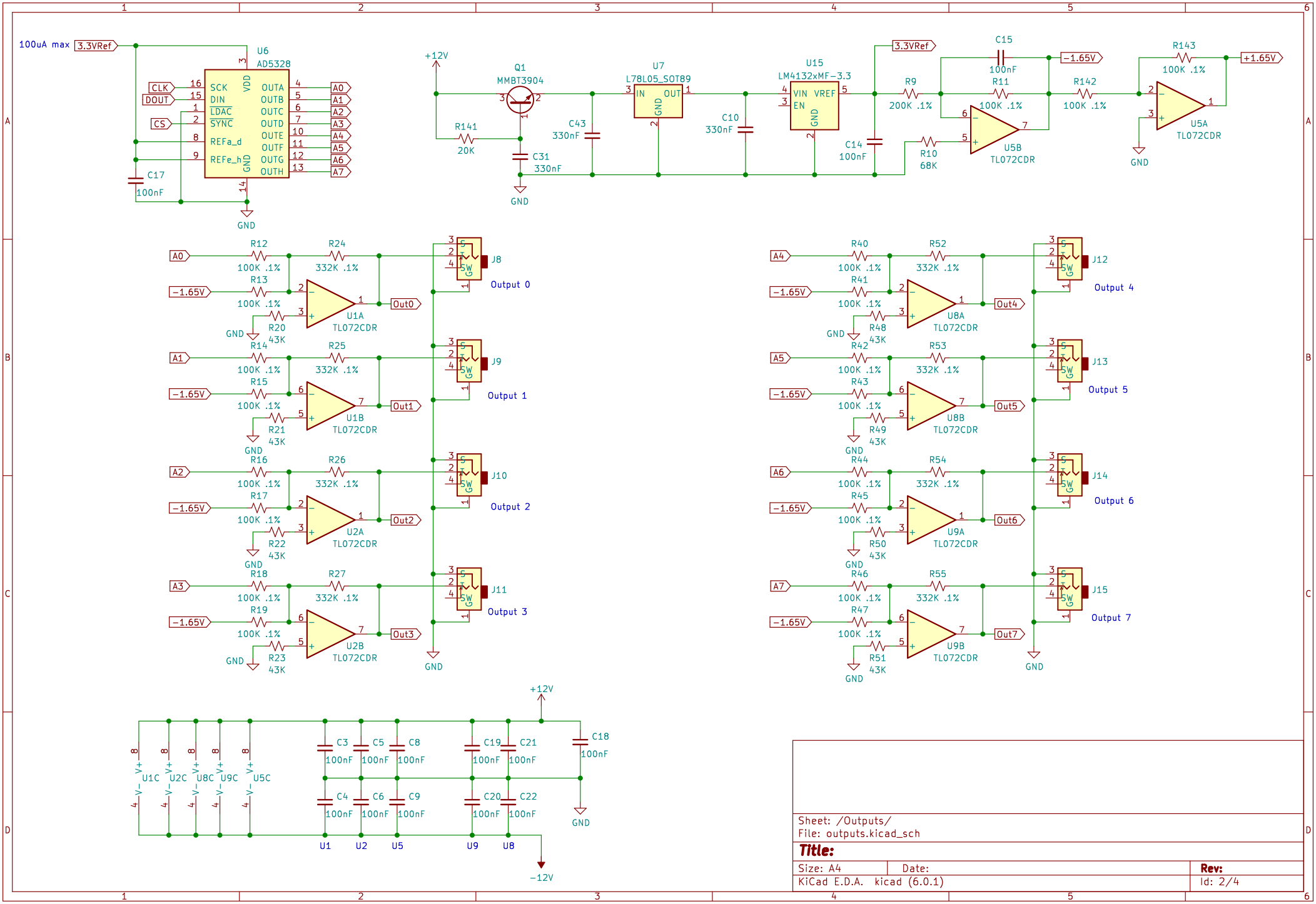

Sheet: /Outputs/
File: outputs.kicad_sch

Title:

Size: A4	Date:	Rev:
KiCad E.D.A. kicad (6.0.1)		Id: 2/4

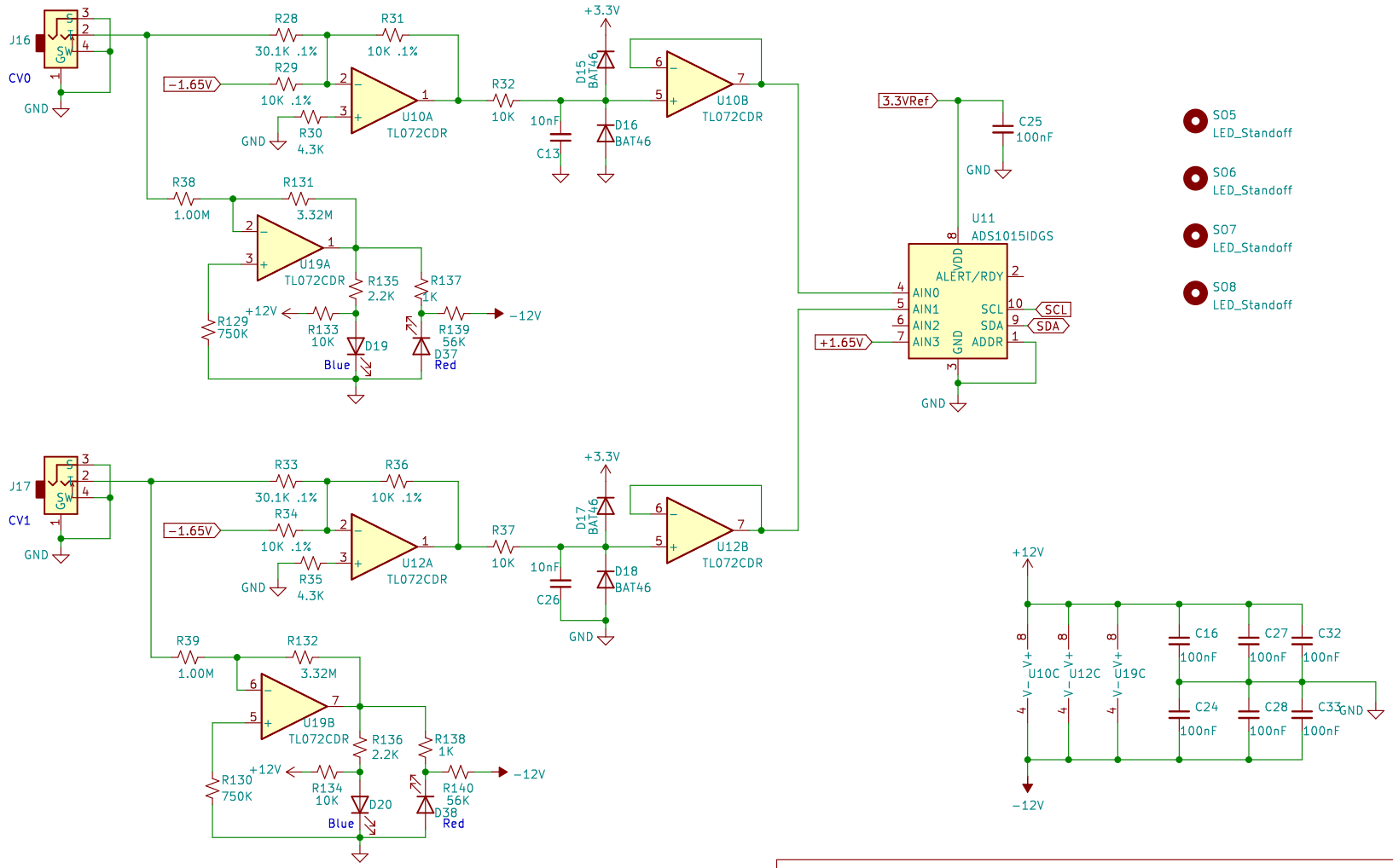

Sheet: /Inputs/
File: inputs.kicad_sch

Title:

Size: A4	Date:	Rev:
KiCad E.D.A. kicad (6.0.1)		Id: 3/4

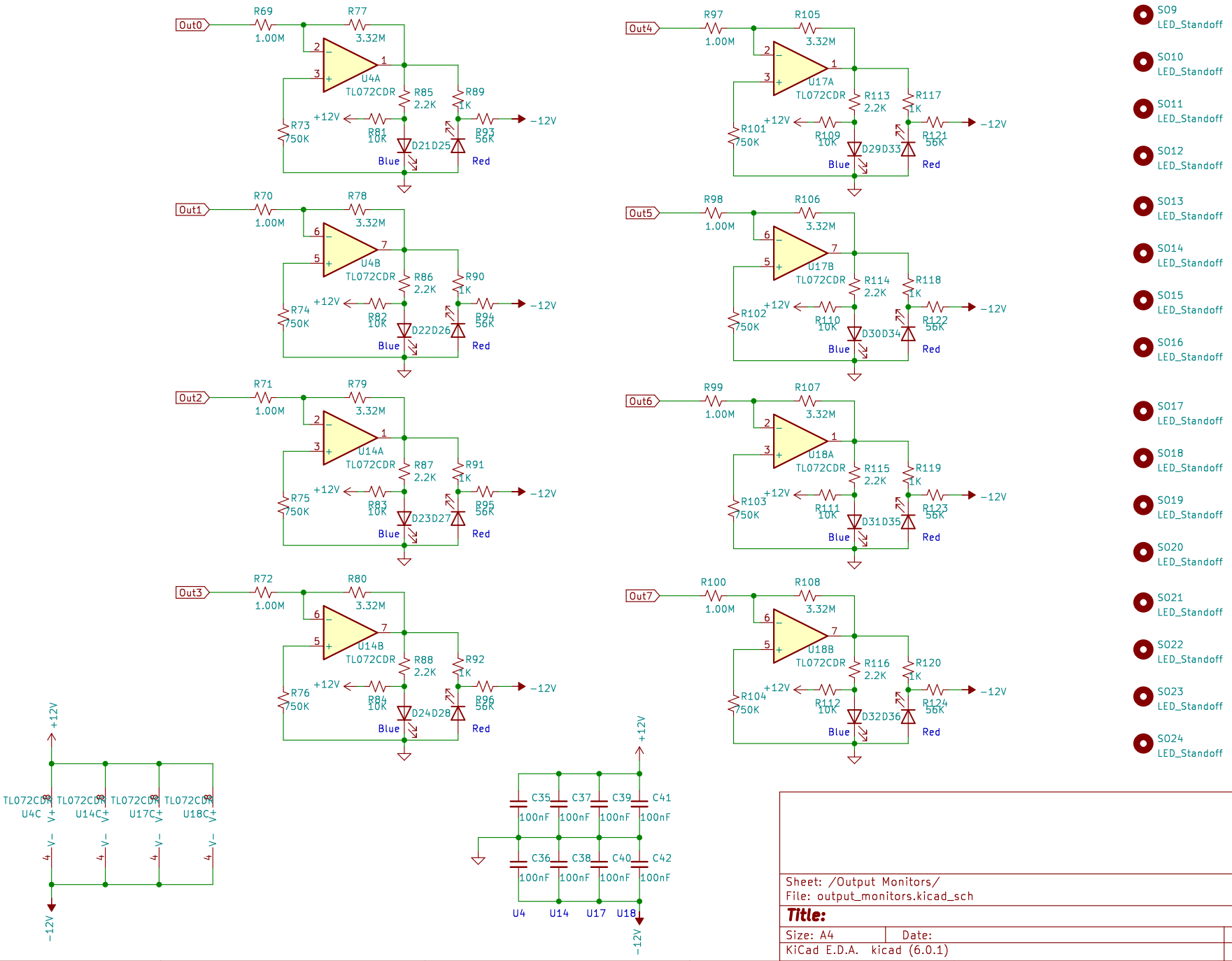

Sheet: /Output Monitors/
File: output_monitors.kicad_sch

Title:

Size: A4	Date:	Rev:
KiCad E.D.A. kicad (6.0.1)		Id: 4/4