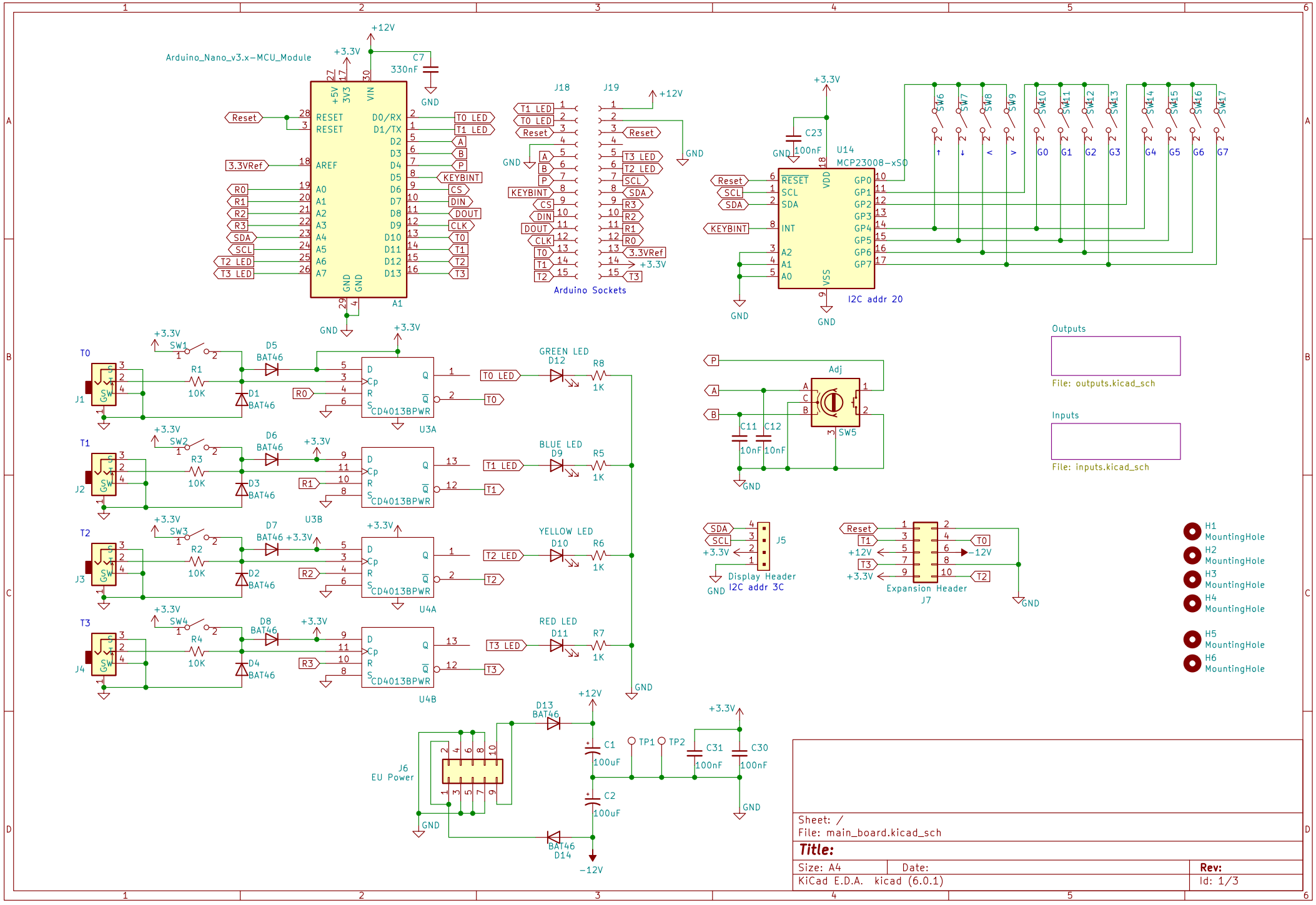
Arduino_Nano_v3.x-MCU_Module
A1
J18
J19
Arduino Sockets
U14
MCP23008-xSO
I2C addr 20
C23
100nF
C7
330nF
Outputs
File: outputs.kicad_sch
Inputs
File: inputs.kicad_sch
T0
T1
T2
T3
J1
J2
J3
J4
SW1
SW2
SW3
SW4
R1
R2
R3
R4
10K
D1
D2
D3
D4
D5
D6
D7
D8
BAT46
U3A
U3B
U4A
U4B
CD4013BPWR
GREEN LED
D12
BLUE LED
D9
YELLOW LED
D10
RED LED
D11
R8
R5
R6
R7
1K
SW5
Adj
C11
C12
10nF
J5
Display Header
I2C addr 3C
J7
Expansion Header
H1
H2
H3
H4
H5
H6
MountingHole
J6
EU Power
D13
D14
C1
C2
100uF
TP1
TP2
C31
C30
100nF
+12V
-12V
+3.3V
GND
Sheet: /
File: main_board.kicad_sch
Title:
Size: A4
Date:
Rev:
KiCad E.D.A. kicad (6.0.1)
Id: 1/3

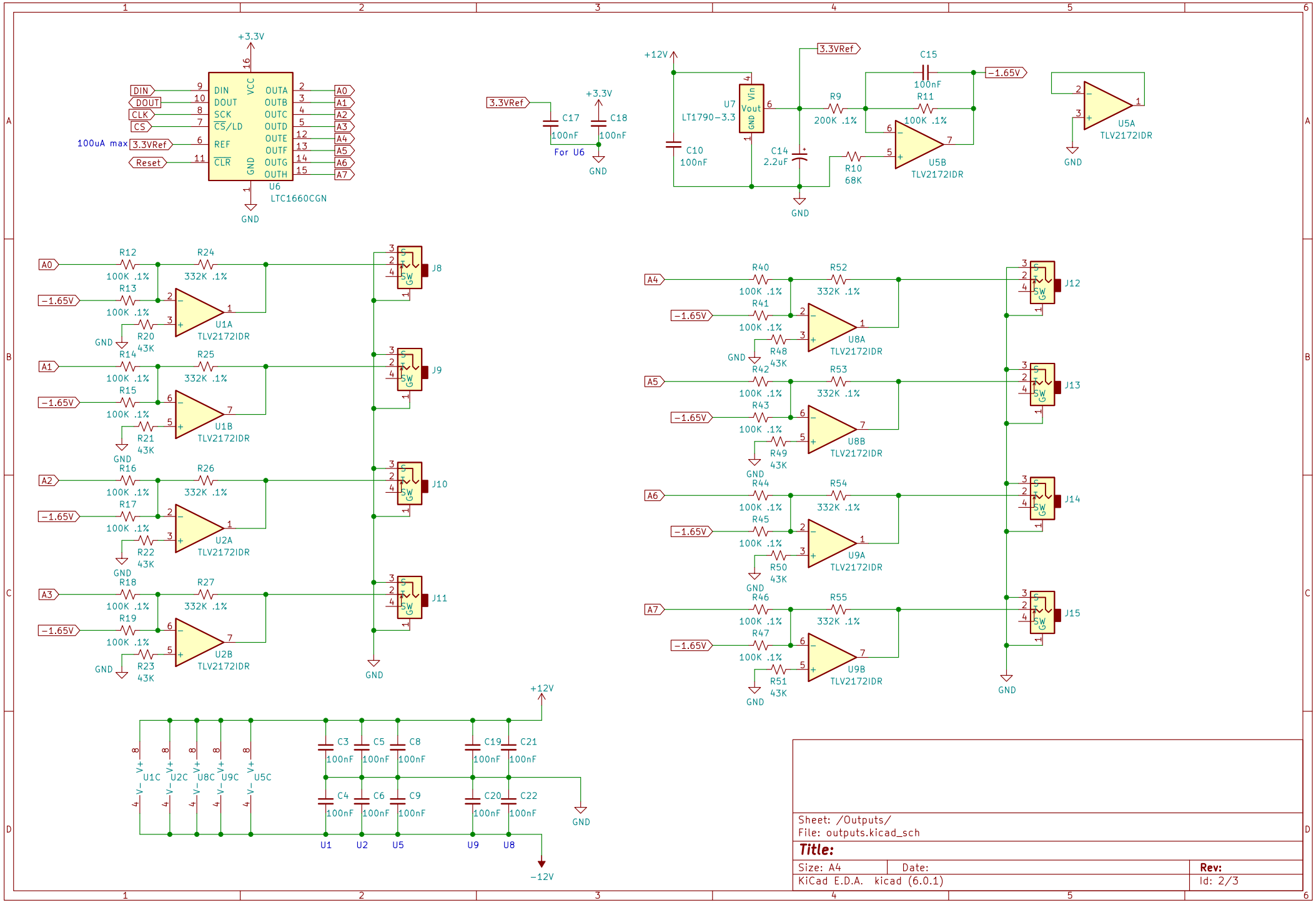

Sheet: /Outputs/
File: outputs.kicad_sch

Title:

Size: A4	Date:	Rev:
KiCad E.D.A. kicad (6.0.1)		Id: 2/3

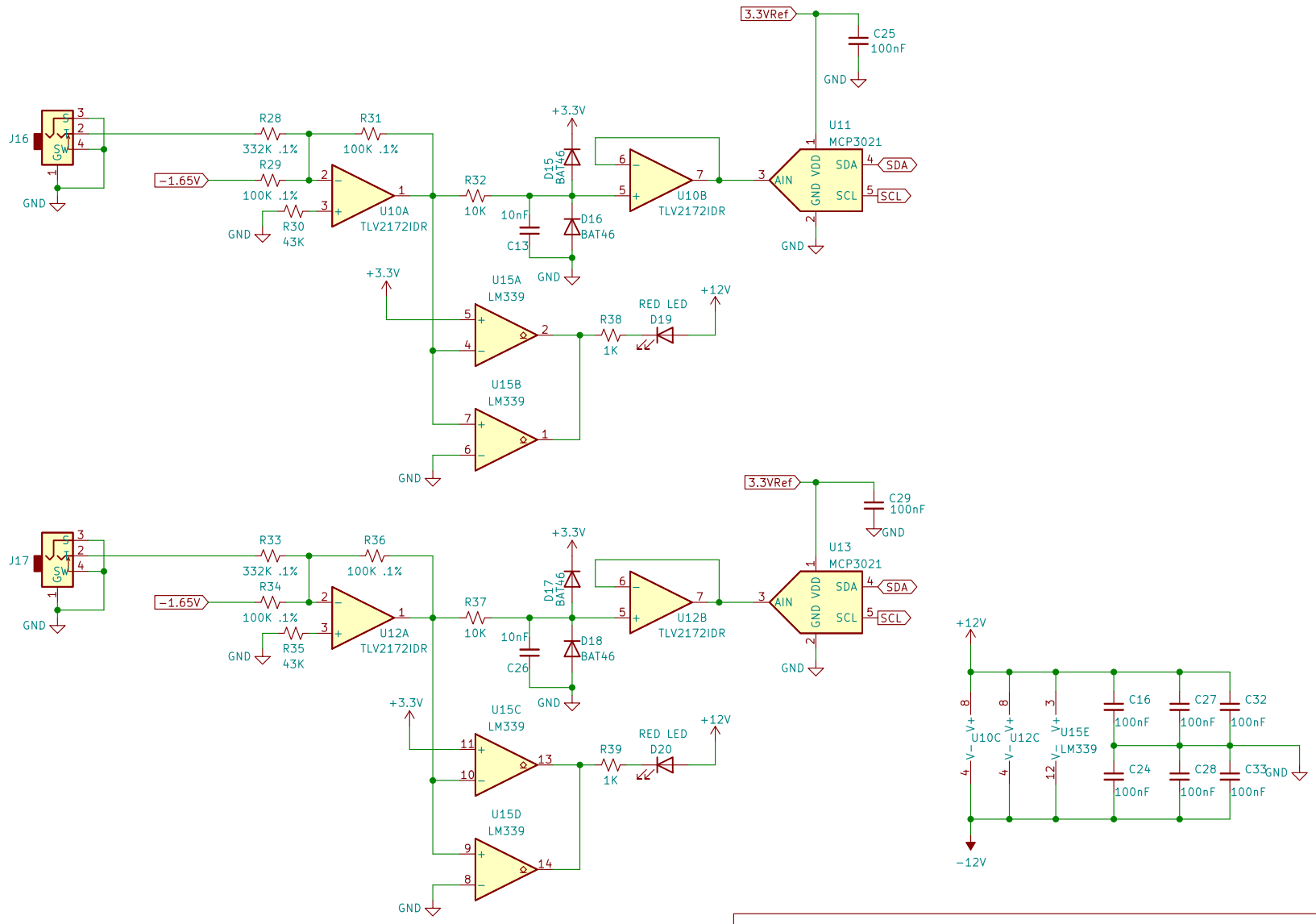

Sheet: /Inputs/
File: inputs.kicad_sch

Title:

Size: A4	Date:	Rev:
KiCad E.D.A. kicad (6.0.1)		Id: 3/3