Drawing 1

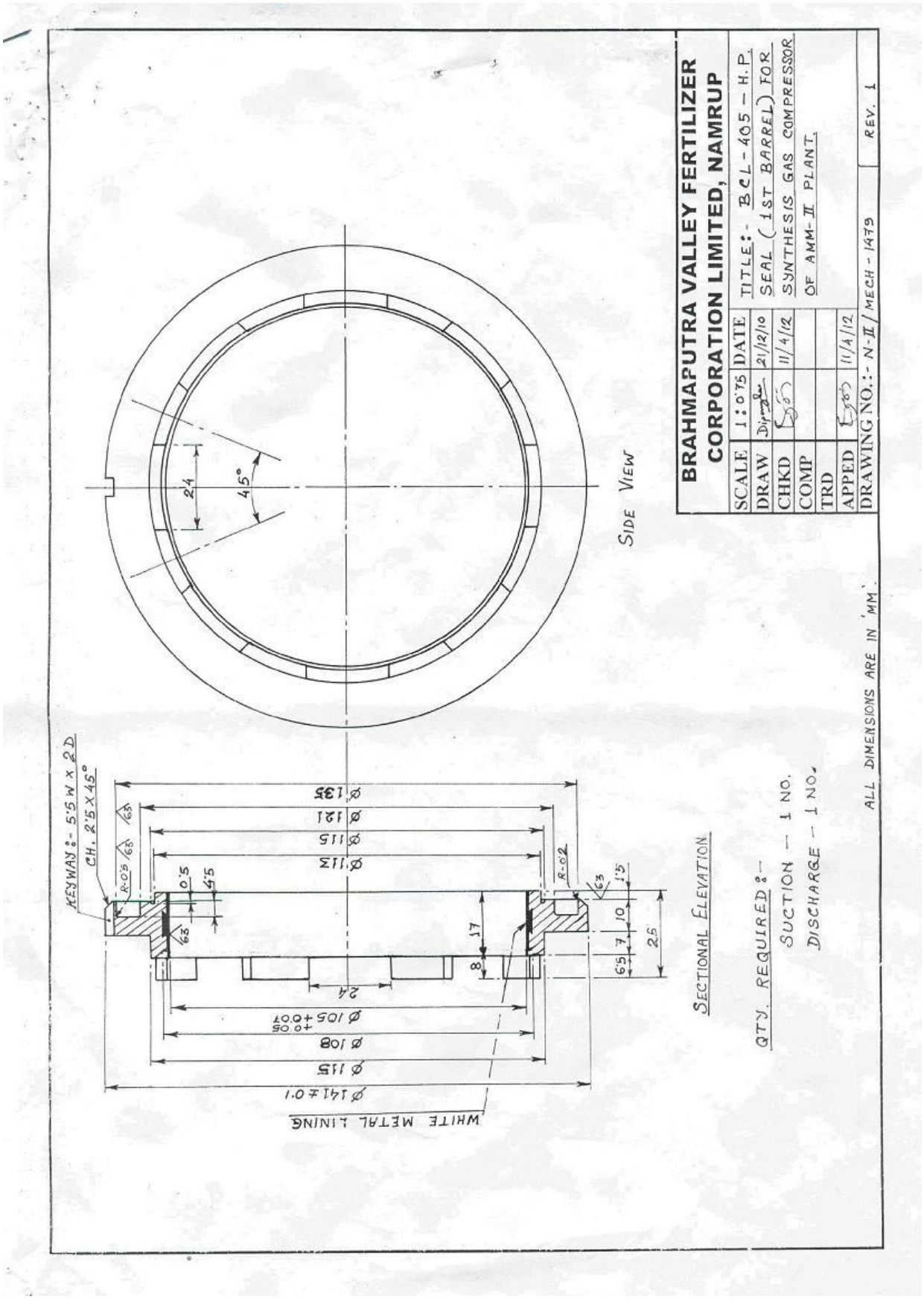
BRAHMAPUTRA VALLEY FERTILIZER CORPORATION LIMITED, NAMRUP
SCALE 1:0.75
DATE
DRAW 21/12/10
CHKD 11/4/12
COMP
TRD
APPED 11/4/12
TITLE:- BCL-405 - H.P. SEAL (1ST BARREL) FOR SYNTHESIS GAS COMPRESSOR OF AMM-II PLANT.
DRAWING NO.:- N-II/MECH-1479
REV. 1
SIDE VIEW
SECTIONAL ELEVATION
KEYWAY:- 5.5 W x 2D
CH. 2.5 x 45°
WHITE METAL LINING
QTY. REQUIRED:-
SUCTION - 1 NO.
DISCHARGE - 1 NO.
ALL DIMENSIONS ARE IN 'MM'.

Drawing 2

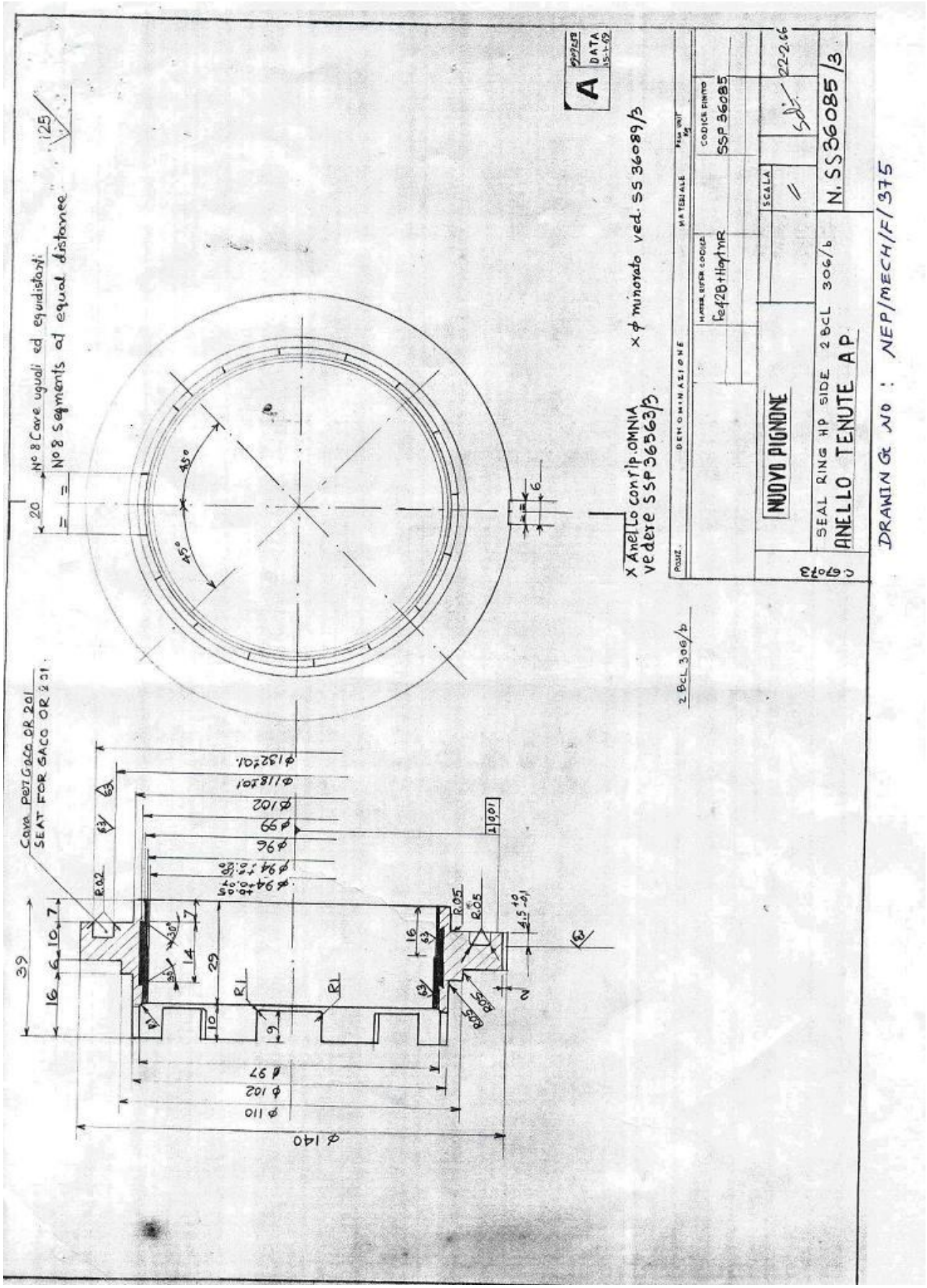
N° 8 Cave uguali ed equidistanti
N° 8 Segments ad equal distance
Cava per Guaio OR 201
SEAT FOR SACO OR 201
X Anello con rip. OMNIA vedere SSP36563/3
X ϕ minorato ved. SS 36089/3
2 BCL 306/b
A
DATA 15-1-69
DENOMINAZIONE
MATERIALE
CODICE FINITO
SSP 36085
NUOVO PIGNONE
SEAL RING HP SIDE 2 BCL 306/b
ANELLO TENUTE AP
SCALA
N. SS36085/3
DRAWING NO : NEP/MECH/F/375

Drawing 3

H.F.C.LTD. NAMRUP UNIT	SYNTHESIS GAS COMPRESSOR 1ST. BARREL L.P. SEAL AMM.-II PLANT	DRG. NO. N-II/MECH-373 REV.-1.

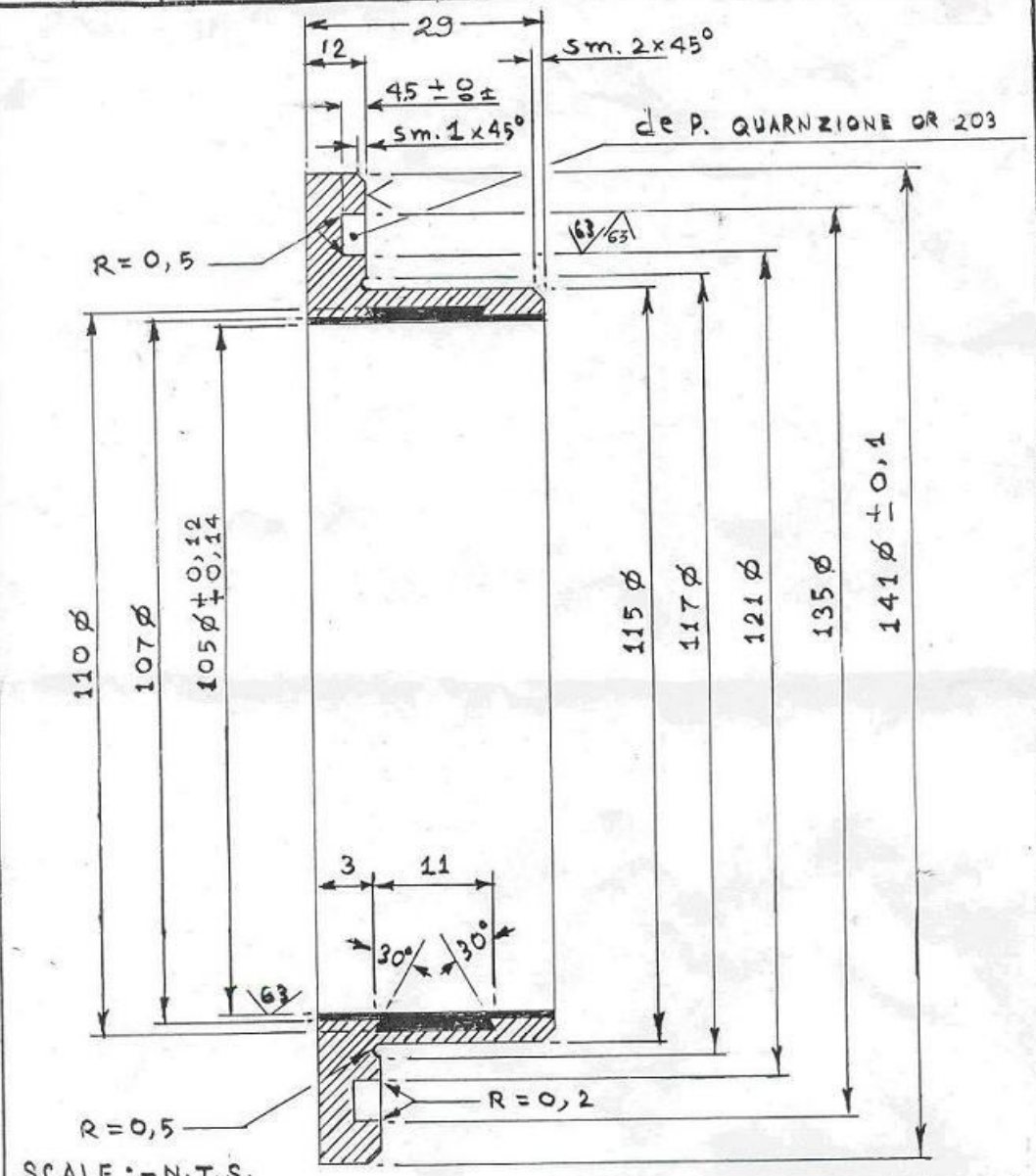

SCALE :- N.T.S.

NOTE :-
ALL DIMENSIONS ARE TAKEN IN MM ONLY.

QTY. REQUIRED :-
SUCTION — 1 NO.
DISCHARGE — 1 NO.

L.P. SEALS		
BCL-407		

THE MEASUREMENTS ARE VALID FOR WHITEMETAL LINING ONLY.

DRN.	DATE 4-5-94	CHKD.	APPD.

Drawing 4

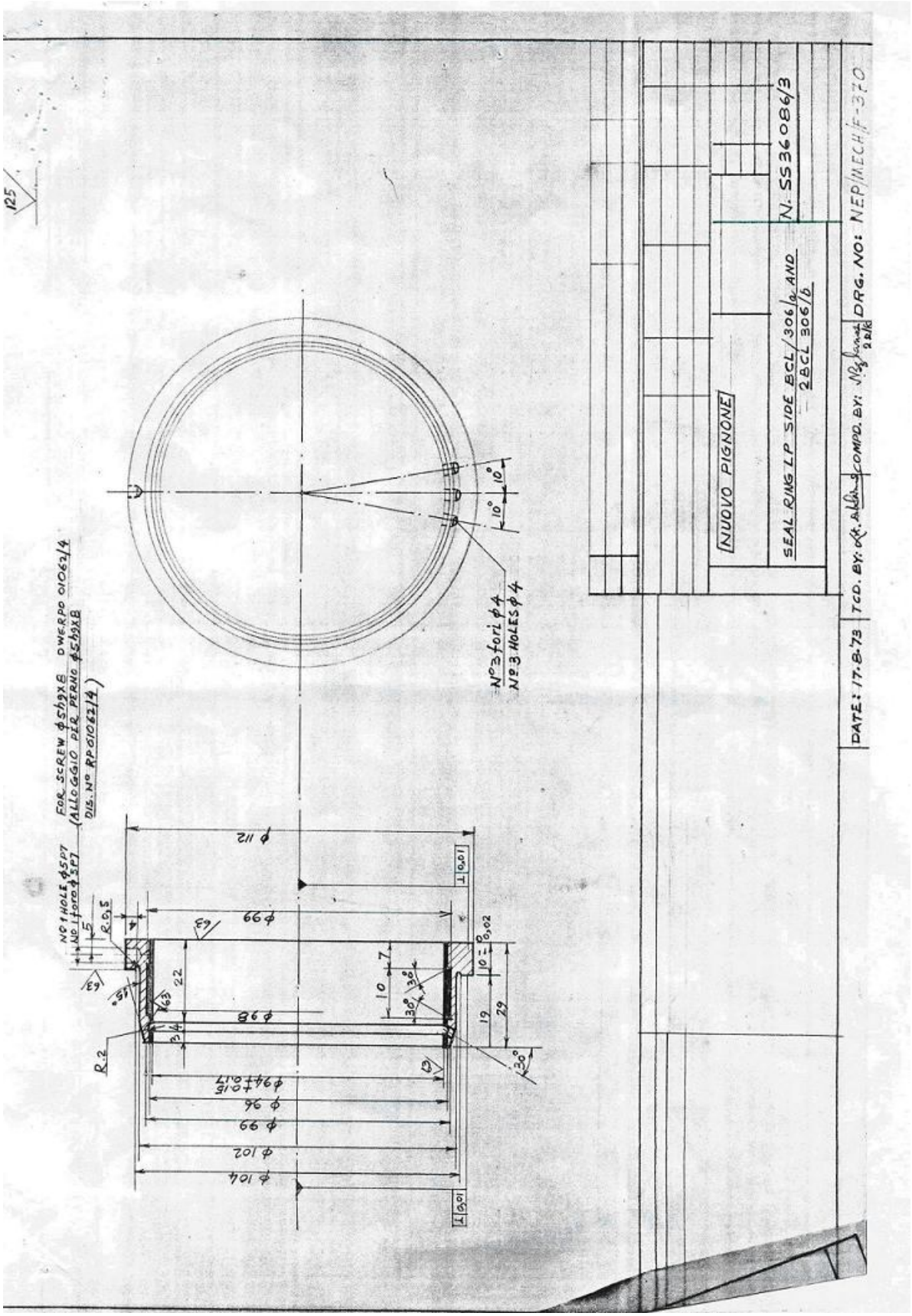
NUOVO PIGNONE
SEAL RING LP SIDE BCL/306/a AND 2BCL 306/b
N. SS36086/3
DATE: 17-8-73
TCD. BY:
COMPD. BY:
DRG. NO: NEP/MECH/F-370
FOR SCREW ϕ5H8x8 DWERPO 01062/4
(ALLOGGIO PER PERNO ϕ5H8x8
DIS. Nº RP01062/4)
Nº 1 HOLE ϕ5P7
Nº 1 foro ϕ5P7
Nº3 fori ϕ4
Nº3 HOLES ϕ4
ϕ112
ϕ99
ϕ98
ϕ94 +0.15 -0.17
ϕ96
ϕ99
ϕ102
ϕ104
R.2
R.0,5
10 = 0,02
0,01
125

Drawing 5

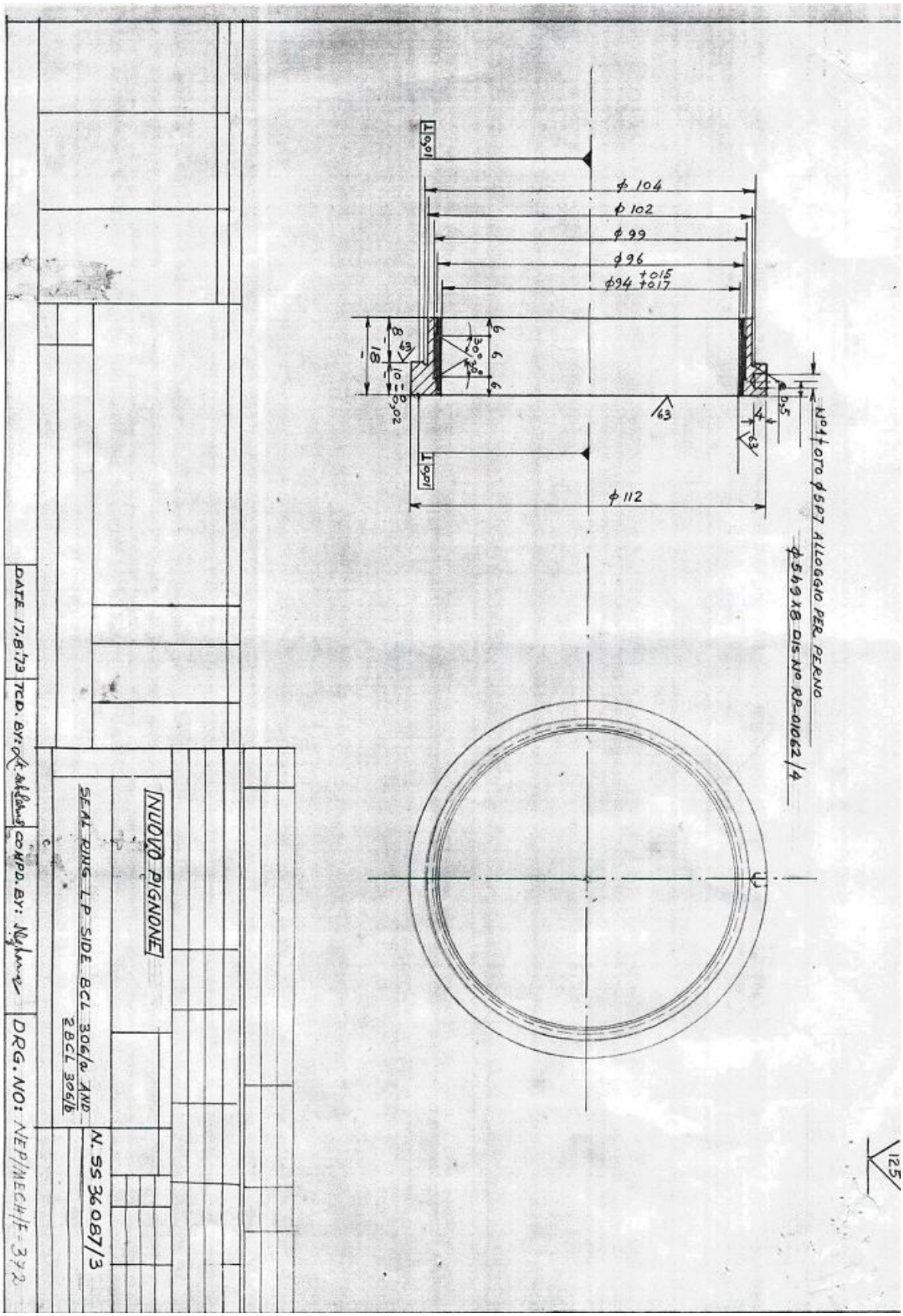
NUOVO PIGNONE
SEAL RING L.P. SIDE BCL 306/a AND
2 BCL 306/b
N. SS 36 087/3
DATE 17.8.73
TCD. BY:
CONTRD. BY:
DRG. NO: NEP/MECH/F-372
Nº1 FORO Ø5P7 ALLOGGIO PER PERNO
Ø5h9 X8 DIS Nº RP-01062/4
Ø104
Ø102
Ø99
Ø96
Ø94 +0.15 +0.17
Ø112
18
8
6
6
6
30°
20°
0.02
0.01
0.01
63
63
63
63
125
5