Investigating Chaos using an RLD and Chua Circuit

Sharjeel Ahmad (24100083) - *Physics*

Supervision

– Rafi Ullah (rafiullah@lums.edu.pk)

– Muhammad Hamza Humayun (muhammad.humayun@lums.edu.pk)

1 Abstract

This paper evaluates two common circuits that showcase the emergence of non-linearity and chaos within physical systems. A Resistor, Inductor, and Diode Circuit alongside a Double Scroll Chua Attractor were investigated. Although both circuit experiments were physically carried out, due to noise in the RLD circuit a virtual circuit was modeled using the Proteus simulator to obtain correlations and readings. The results agreed with the theoretical predictions and displayed chaotic behavior under specific resistances and/or voltages.

2 Introduction

Chaos theory is a thoroughly studied branch of mathematics and physics that has numerous practical applications. Interestingly, almost all real-world systems, even if made slightly complex, exhibit chaotic behavior. For example, even though the single pendulum is a very straightforward apparatus with simple mathematical equations that govern its motion, the double pendulum (just two pendulums connected in series) exhibits chaotic behavior whose motion is exceedingly hard to predict without taking small angle approximations. An everyday example of chaos could be observed in weather patterns, ocean turbulence, and even a stack of coins falling on the floor. We define a system as chaotic when there are at least three non-linear and independent dynamical variables [1].

Furthermore, chaotic systems are hypersensitive to initial conditions, which makes their evolution in time seemingly unpredictable and random. Nonetheless, even chaotic systems can be neatly modeled using nonlinear systems of differential equations. The scientists studying chaos seek to bridge the gap between this apparent physical uncertainty and theoretical reliability. Chaos is

relatively easy to model and study using electrical circuitry, requiring just a handful of readily available electrical components, an oscilloscope, and in the case of an RLD circuit, a single generator.

3.1 Theoretical Background: RLD

A basic RLD circuit has three major components, the inductor, the resistor, and the diode. As shown in the figure below:

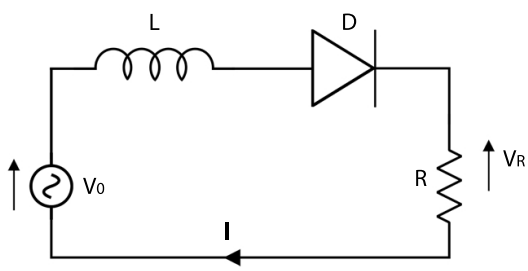

Figure 1: Basic RLD Circuit Diagram

The diode used in the experiment, as well as the simulation, was a 1N4007 Bridge Rectifier Diode. During its conducting cycle, the diode acts as a battery by virtue of producing a voltage drop in the circuit. Based on the model presented in figure 1, we can apply Kirchhoff's voltage law to the single circuit loop to obtain the following differential equation:

$$V_d + V_0 \sin \omega t = RI + L\,\frac{dI}{dt} \tag{1}$$

Where V_d represents the voltage drop caused by the diode. The equation above can be solved to obtain an equation for the evolution of current with time as such:

$$I(t) = Ae^{-\frac{Rt}{L}} + \frac{V_0}{H_a}\cos\left(\omega t - \theta_a\right) + \frac{V_d}{R} \tag{2}$$

Where A is an integration constant determined by the boundary conditions. $H_a = \sqrt{L^2\omega^2 + R^2}$ and $\theta_a = \tan^{-1}\left(-\frac{R}{L\omega}\right)$.
During its non-conducting cycle, the diode behaves like a capacitor with its capacitance equivalent to its junction capacitance. Once again, the circuit has only one loop, which gives the following second-order differential equation:

$$V_0\omega\cos\omega t - \frac{I}{C_j} = L\,\frac{d^2I}{dt^2} + R\,\frac{dI}{dt} \tag{3}$$

where C_j is the junction capacitance.
After solving equation (3) in order to obtain I in terms of t we get:

$$I(t) = Be^{-\frac{Rt}{2L}}\cos\left(\omega_b t - \phi\right) + \frac{V_0}{H_b}\cos\left(\omega_0 t - \theta_b\right) + \tag{4}$$

Where ϕ and B are integration constants determined by the boundary conditions. $\omega_b = \sqrt{\omega_0^2 - \left(\frac{R}{2L}\right)^2}$, $H_b = \frac{L}{\omega}\sqrt{\omega_0^2 - \omega^2 + \left(\frac{R\omega}{L}\right)^2}$, $\omega_0 = \frac{1}{LC_j}$, $\theta_b = \tan^{-1}\left(\frac{R\omega}{L(\omega_0^2-\omega^2)}\right)$.

Non-linearity is introduced within the system when we realize that the recovery time is directly proportional to the forward current received during the conducting cycle. Since the diode's recovery time is not instantaneous, some current will flow through it even in the reverse cycle. The diode's recovery time is related to the forward current, hence an increase in the peak current would lead to more and more current being allowed to flow through the diode during the non-conducting cycle [2]. If the reverse current can not reset before the conducting cycle, the diode will switch on with a delay, leading to a new "peak" within the forward current. This process is known as period-doubling bifurcation. If the peak current is allowed to increase, then eventually, a period-quadrupling bifurcation may occur, and so on. Since the bifurcations are dependent on the initial conditions from the previous cycle, then under complex and varying parameters, the circuit devolves into chaos after a few bifurcations [2].

3.2 Theoretical Background: Chua

For Chua circuits to display chaotic and non-periodic behavior, they must contain [3]:

1. At least one locally active resistor
2. At least one non-linear section
3. At least three energy storage modules

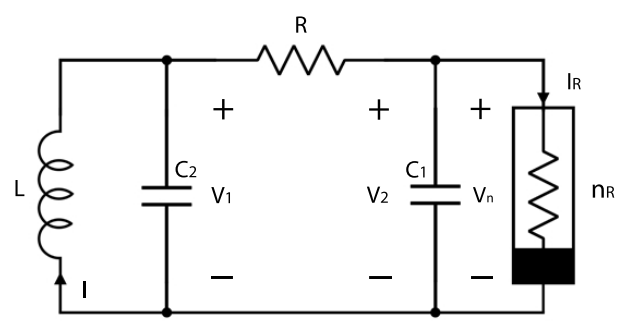

Figure 2: Basic Chua Circuit Diagram

As shown in figure 2, the basic Chua circuit contains two capacitors and an inductor, this part of the circuit is a linear damped oscillator with three unstable

equilibrium points, i.e., the energy storage units. A locally active resistor is a resistor with negative resistance that can amplify certain inputs, which provides energy to stimulate an oscillating current. Note that the locally active resistor is non-linear and only acts as a driving force for the dynamic components. The non-linear section creates non-repeating oscillatory waveforms by altering the initial conditions of the unstable equilibrium points, allowing the Chua Circuit to achieve chaos using various routes [4]. The non-linear section and the locally active resistor can be constructed using a plethora of resistors, capacitors, diodes, and operational amplifiers. The non-linear differential equations can be calculated using Kirchhoff's voltage laws to highlight the voltage across the inductor and two capacitors, as shown below[5]:

$$\frac{dI_L}{dt} = -\frac{V_2}{L} \tag{5}$$

$$\frac{dV_2}{dt} = \frac{I_L}{C_2} - \frac{V_2 - V_1}{C_2 R} \tag{6}$$

$$\frac{dV_1}{dt} = \frac{V_2 - V_1}{C_1 R} - \frac{f(V_n)}{C_1} \tag{7}$$

Here $f(V_n)$ commonly represents a piece-wise function that operates in the non-linear part of the circuit, taking the voltage across the non-linear part to propagate chaos under certain conditions [6]. The exact piece-wise function depends on how the non-linear part has been set up and will vary from system to system.

4 Experimental Setup and Results

0.1 RLD Circuit

The RLD circuit was set up in Proteus as shown in figure 3 below:

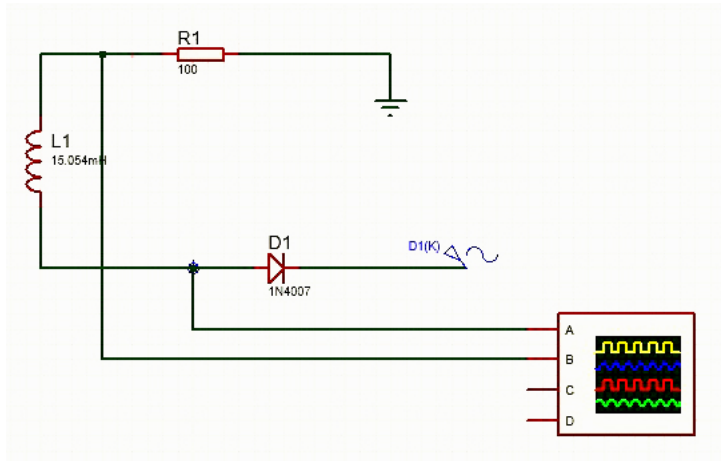

Figure 3: RLD Circuit Simulated using Proteus

The inductor was set to 15.054 mH, the resistor had a resistance of 100 Ω, along with an 1N4007 Diode. A virtual oscilloscope was connected to the circuit in order to obtain the time series graphs of the voltages across the resistor and diode as well as the phase portraits. The input "A" of the oscilloscope plots the time series of the voltage across the diode. The input "B" of the oscilloscope plots the time series of the voltage across the resistor. The supply voltage (D1(K)) had a sinusoidal frequency of 50,000 Hz in order to create rapidly varying voltage parameters to induce chaos. The peak to peak voltage initially set to $1V$. The voltage was incrementally increased and bifurcations were noted until the system descended into complete chaos.

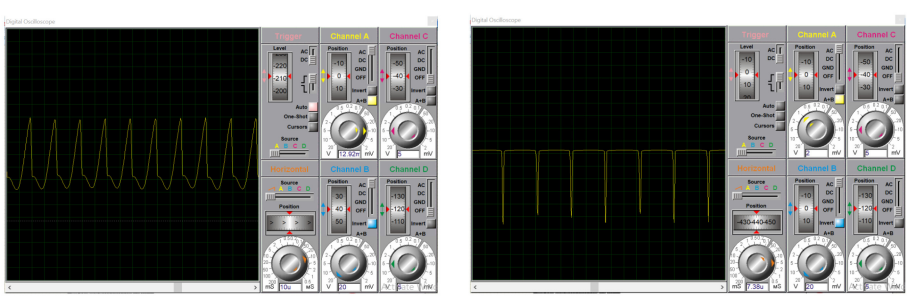

Voltage Across Resistor **Voltage Across Diode**

Figure 4: Peak to Peak 1 V

According to figure 4, at one voltage pk-pk we do not observe anything

out of the ordinary. The time series of the voltage across the resistor was a sinusoidal graph with sharp crests, as expected with an alternating sinusoidal input voltage. The time series of the voltage across the diode contains sharps dips indicative of the voltage drops during the conducting cycle.

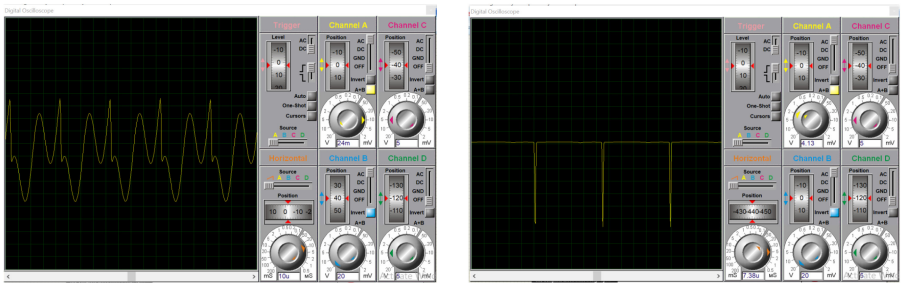

Voltage Across Resistor **Voltage Across Diode**

Figure 5: Peak to Peak 3 V

In figure 5, upon increasing the pk-pk voltage to 3 volts we observe our first period-doubling bifurcation shown by the second repeating peak formed in the time series of voltage across the resistor. The time series of the voltage across the diode has a similar plot when compared to the plot at 1V but with greater spacing between the "dips", due to the increase in the diode recovery time as discussed in section 3.1[7].

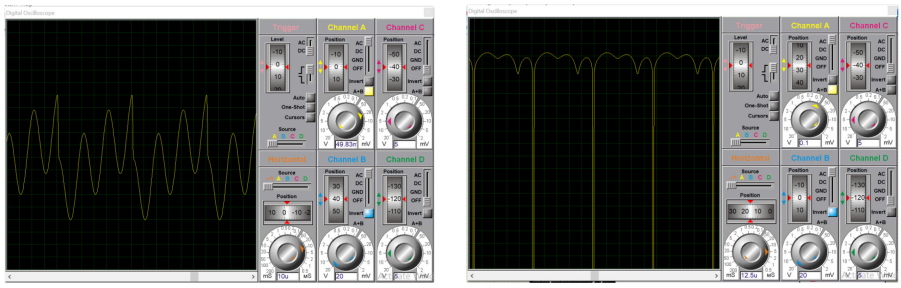

Voltage Across Resistor **Voltage Across Diode**

Figure 6: Peak to Peak 7 V

In figure 6, upon increasing the pk-pk voltage to 7 volts we observe our second period-doubling bifurcation shown by the third repeating peak formed

in the time series of voltage across the resistor plot. The time series of the voltage across the diode now has extremely sharp dips alongside wavy patterns in between. This shows that the circuit is nearing its chaotic phase as the forward bias and reverse bias currents are significantly out of equilibrium.

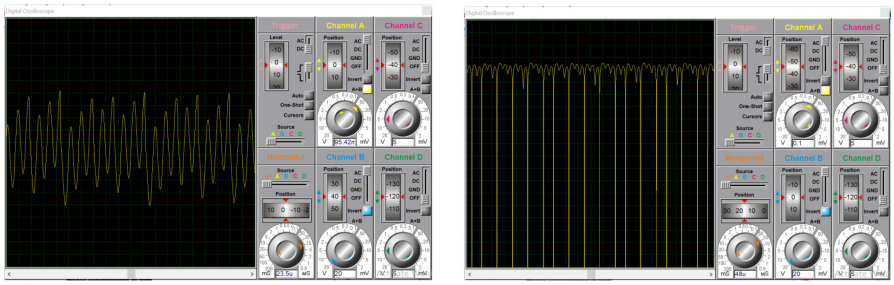

Voltage Across Resistor **Voltage Across Diode**

Figure 7: Peak to Peak 13 V

In figure 7, upon increasing the pk-pk voltage to 13 volts we finally observe chaos shown by the non repeating random peaks in the time series of voltage across the resistor and diode plots.

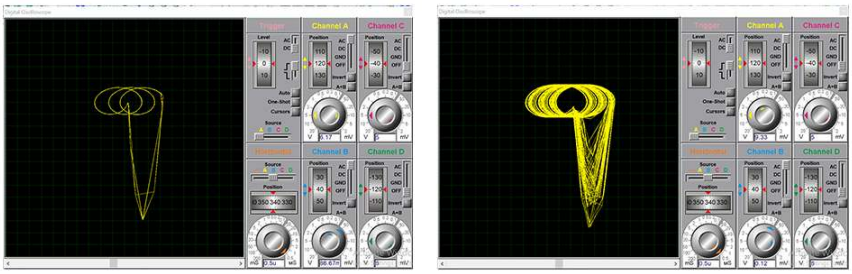

Figure 8: Phase Portraits at pk-pk 7V (Left) and pk-pk 13V (Right)

Figure 8 displays the phase portraits of the time series of voltage across the resistor and diode at 7V and 13V. Phase portraits express the trajectory of a system by plotting two variables against each other. In this case the variables were the time series of voltage graphs of the resistor and diode. A single loop in the portrait is identified as a period-1 wave, a double loop in the portrait represents period-doubling and so on. As seen in figure 6, at 7V we observed

the second bifurcation and hence should see three loops in the phase portrait alongside some chaotic behaviour. This hypothesis is perfectly exhibited in Figure 8 by the three loops seen in the phase portrait at 7 pk-pk volts along with numerous noisy loops at the bottom.
Furthermore the phase portrait on the right of figure 8 shows numerous loops throughout the portrait almost akin to observing large amounts of noise in a physical system which is what we detect when the system becomes chaotic. This was was observed in figure 7 when the pk-pk voltage was set to 13[2].

0.2 Chua Circuit

For this experiment a double scroll Chua circuit was used whose circuit diagram is shown in the figure below.

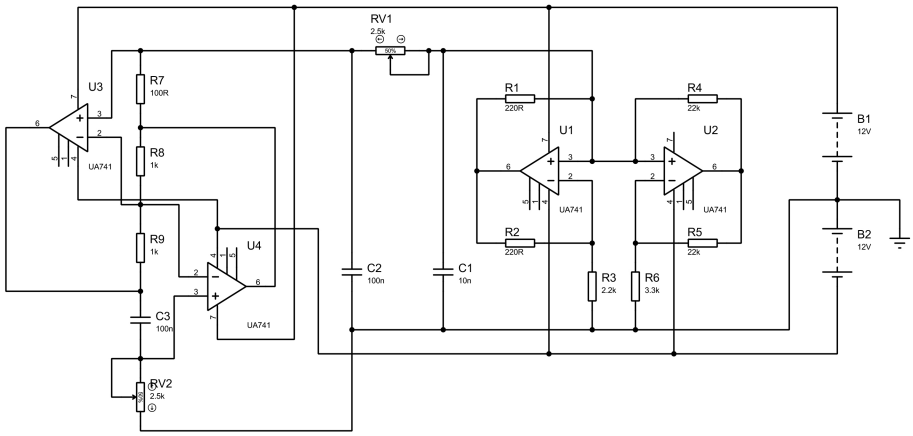

Figure 9: Double Scroll Chua Circuit Diagram

We can relate Figure 1 and Figure 9 to note that the non linear part of the circuit lies to the right of Capacitor "C1" and the inductor part lies to the left of Capacitor "C2". A standard alternating voltage at 220V was used as the power supply. A variable resistor (RV1) was used to alter the resistance within the Chua Circuit. The times series of voltage across the inductor part of the circuit and non-linear part of the circuit was plotted on the oscilloscope along with their phase portraits. Chaos was observed in between the points of minimum and maximum resistance.

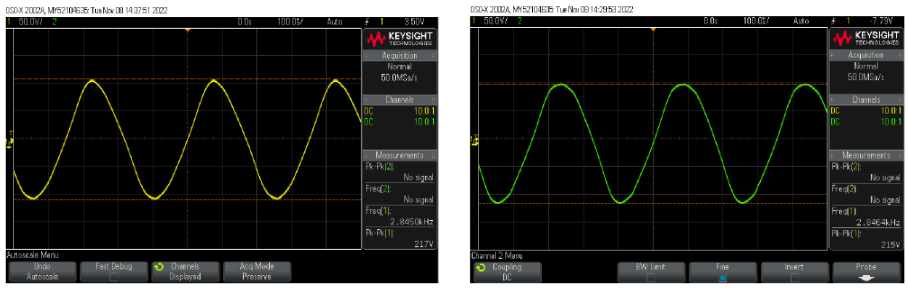

Voltage Across Inductor **Voltage Across Non-Linear**

Figure 10: Time Series of Voltage at minimum Resistance

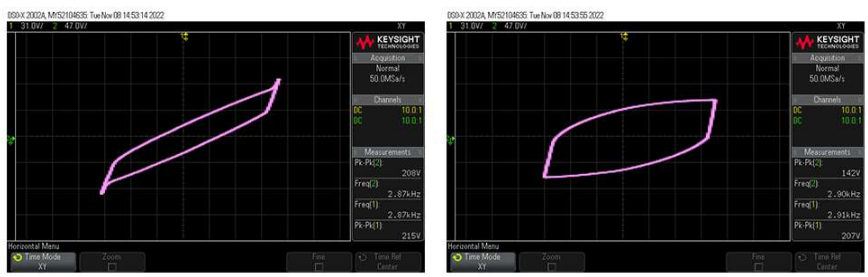

Figure 11: Phase Portrait at minimum resistance (left) and slightly more than minimum resistance (right)

In figure 10 we can see sinusoidal voltage plots for both the inductor part and the non linear part of the Chua circuit with a pk-pk voltage of almost 220V. This was expected given that a sinusoidal alternating power supply was used as an input voltage with a pk-pk voltage of 220V. Both the graphs in figure 10 are orderly and do not show any bifurcations which is why we should expect a single loop in the phase plot. Figure 11 confirms this hypothesis as we see a single rectangular loop on the left. Upon increasing the voltage, before the circuit became chaotic, we can see that the phase portrait maintained its single loop shape but became wider which means that the inductor part and the non linear part of the circuit do not change in unison upon changing the input parameters.

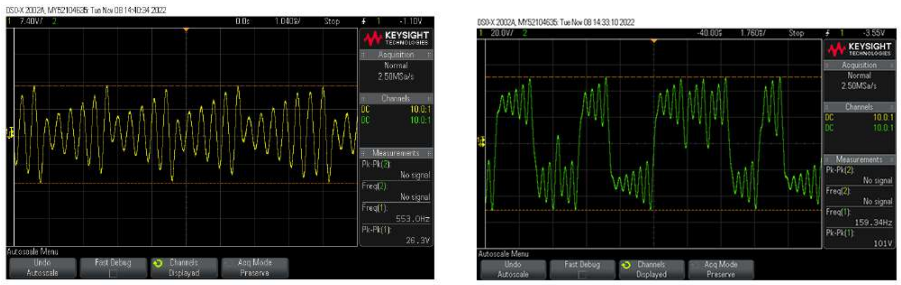

Voltage Across Inductor **Voltage Across Non-Linear**

Figure 12: Chaotic Time Series of Voltage

Figure 12 confirms the hypothesis that the inductor and non-linear part change differently upon changing the input parameters as we can see that upon increasing the resistance the two plots have diverged into completely different shapes. We can also see that both plots show non repeating oscillations indicative of chaotic behavior.

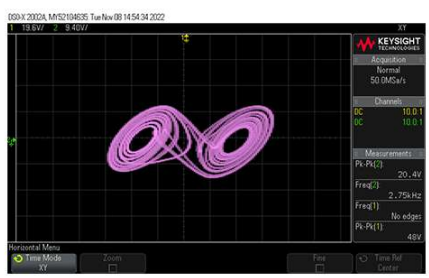

Figure 13: Phase Portrait displaying chaotic behavior

As expected the phase portrait shows numerous loops in an infinity shape, the defining feature of chaotic behavior in double scroll Chua circuits. The double scroll can be understood as two single solutions connected by a trajectory that goes from the inner region of one scroll to the outer region of the other scroll. As the voltage increases the equilibrium points of the circuit become further and further apart leading to this chaotic infinity sign via the double scroll [8].

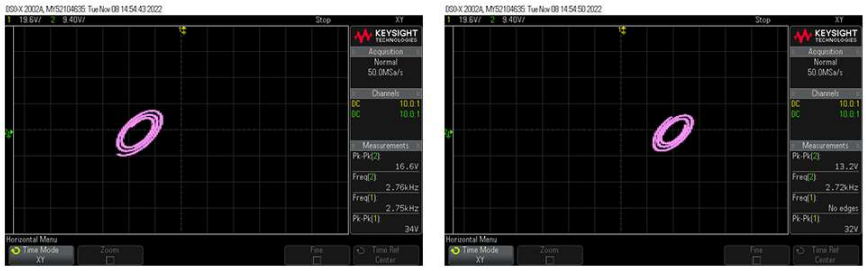

Figure 14: Chaotic Phase Portrait stopped at 2 different time intervals

We further investigated the chaotic behaviour of the circuit by stopping the oscillator as different time intervals. As shown in figure 14 we observed that at any given point in time the loops were either being formed on the left scroll or the right scroll and never both. This helps to confirm that the double scroll acts like two single scroll solutions rapidly shifting between one another.

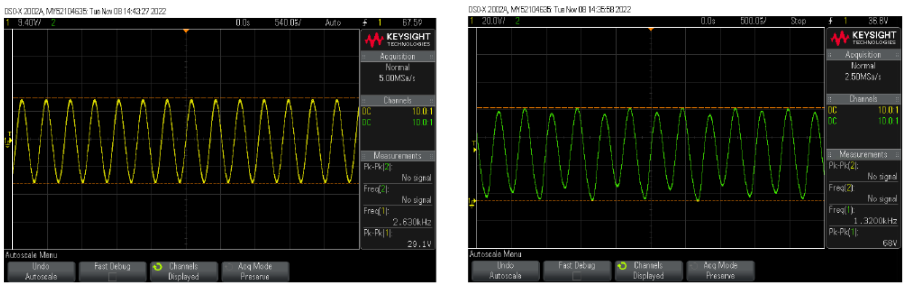

Voltage Across Inductor **Voltage Across Non-Linear**

Figure 15: Time Series of Voltage at maximum Resistance

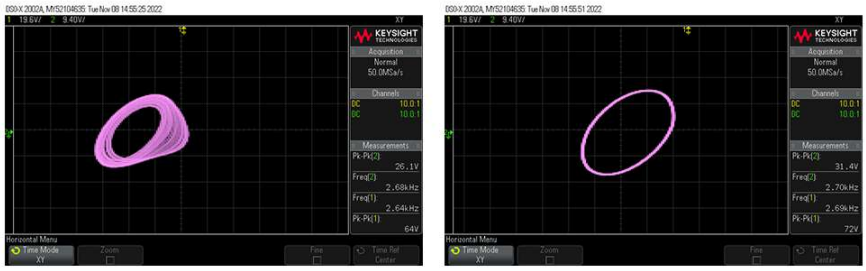

Figure 16: Phase Portrait at maximum resistance (right) and slightly less than maximum resistance (left)

Upon increasing the resistance even further the chaotic behavior slightly receded and the time series for both the voltage across the inductor and non-linear part assumed more orderly sinusoidal shapes as shown in figure 15. Even though chaotic behavior was still observed as shown in the left section of Figure 16, there was an decrease in the "degree" of chaos due to the time series of voltage across inductor and non-linear part becoming less random. Upon reaching maximum resistance of the variable resistor, the time series plots became ordered enough to display a single neat loop in the phase portrait as shown in the right section of figure 16 hinting at the complete disappearance of chaotic behavior. This means that chaotic behavior within the double scroll Chua circuit does not persist just by linearly increasing a particular parameter but rather is either cyclic and/or only exhibits chaos in certain parameter ranges.

5 Conclusion

The stark agreement between the experimentally observed data and the theoretical predictions re-iterate the importance of studying and applying chaos theory within scientific fields. Although the results obtained were satisfying, it should be noted that the RLD circuit and the double scroll Chua circuit are relatively "simple" examples of chaos observed in laboratory settings. There are many more experiments highlighting non-periodicity and chaos that require more mathematically involved and computer intensive approaches in order to even find a semblance of a solution or a physical explanation. Nonetheless, these two experiments serve as a benchmark on approaching circuit based chaos experiments and finding the ordered beauty underneath the cloak of havoc and disarray.

Despite its unpredictable and ubiquitous nature, it is "certain" that chaos will never fail to simultaneously amaze and stagger the minds of all those that aim (or maybe hope) to unravel its mysteries.

References

[1] A. ÖZ and E. AK, "Tools for detecting chaos," *Sakarya Üniversitesi Fen Bilimleri Enstitüsü Dergisi*, vol. 9, no. 1, pp. 60–66, 2005.

[2] Z. A. Hanias, M. P. and G. S. Tombras, "Period doubling, feigenbaum constant and time series prediction in an experimental chaotic rld circuit," *Chaos, Solitons Fractals*, vol. 40, no. 3, pp. 1050–1059, 2009.

[3] M. P. Kennedy, "Three steps to chaos. i. evolution," *IEEE Transactions on Circuits and Systems I: Fundamental Theory and Applications*, vol. 40, no. 10, pp. 640–656, 1993.

[4] L. O. Chua, "The genesis of chua's circuit," *Berkeley, CA, USA: Electronics Research Laboratory, College of Engineering, University of California,*, 1992.

[5] e. a. Wang, Ning, "Generating multi-scroll chua's attractors via simplified piecewise-linear chua's diode," *IEEE Transactions on Circuits and Systems I: Regular Papers*, vol. 66, no. 12, pp. 4767–4779, 2019.

[6] R. Kiliç, "A practical guide for studying chua's circuits," *World Scientific*, vol. 71, 2010.

[7] e. a. Azzouz, Duhr, "Transition to chaos in a simple nonlinear circuit driven by a sinusoidal voltage source," *IEEE Transactions on Circuits and Systems*, vol. 30, no. 12, pp. 913–914, 1983.

[8] J. Lavröd, "A practical guide for studying chua's circuits," *Lunds University, Division of Mathematical Physics, Department of Physics, Faculty of Science*, 2014.