UNIT III - APPLICATIONS OF LASER

Application of laser in industry – cutting and welding – Drilling – Surface Hardening – Medical applications – Laser as diagnostic and therapeutic tool – Holography – Theory of recording and reconstruction – application of Holography.

1. Introduction

Lasers deliver coherent, monochromatic, well-controlled, and precisely directed light beams. A priori, therefore, lasers would seem tobe poor choices for general-purpose illumination, however, they are ideal for concentrating light in space, time, or particular wavelengths. Lasers have been regularly used to measure, cut, drill, weld, read, write, send messages, solve crimes, burn plaque out of arteries, and perform delicate eye operations.

Laser	Wavelength (μm)	Peak power (watts)	Pulse repetition rate (pulses per second)	Typical use
Nd:YAG (repetitively pulsed)	1.06	10^6	10	Drilling metals, scribing silicon wafers
Nd:YAG (repetitively Q-switched)	1.06	10^5	5000	Trimming resistors
Nd:YAG (continuous)	1.06	up to 5400	—	Cutting metals
CO_2 (repetitively pulsed)	10.6	10^5	100	Hole drilling in alumina circuit boards
CO_2 (TEA)	10.6	10^6	100	Marking components
CO_2 (continuous)	10.6	up to 20,000	—	Cutting metals, plastics, cloth
Copper vapor	0.512, 0.578	3×10^5	6500	Drilling metals
Excimer	0.193, 0.248	10^6–10^7	100	Drilling plastics, ceramics
Ruby	0.694	10^6	low (<1)	Drilling gemstones
Nd:glass	1.06	10^6	low (<1)	Drilling hard metals

Over and over again the laser has proved to be an extremely practical tool. Nevertheless, lasers have also proved their usefulness in non-practical applications, especially in the realm of art and

entertainment. Lasers are involved in almost all aspects of these fields, from “light shows” to Compact Discs (CDs) and Digital Video Discs (DVDs), to special effects in the movies. Some other commonplace application of lasers are as Laser pointers, barcode scanners, laser printers, etc.

Still, much of the important modern day celebrated applications lie in the fiber-optic communication, laser machining and fabrication, trace element detection, laser metrology and medical imaging.

1.1 Laser Machining and cutting

Laser energy can be focused in space and concentrated in time so that it heats, burns away, or vaporizes many materials. Although the total energy in a laser beam may be small, the concentrated power on small spots or during short intervals can be enormous. Although lasers cost much more than mechanical drills or blades, their different properties allow them to perform otherwise difficult tasks.

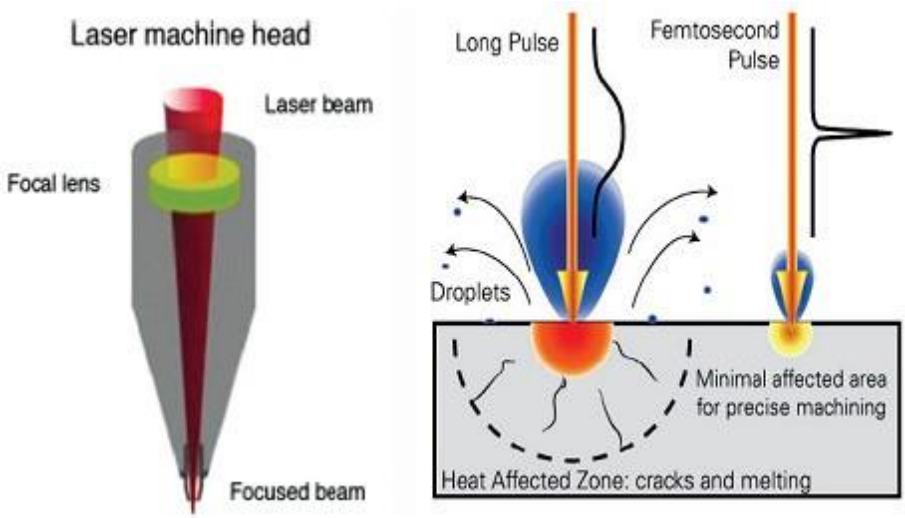

Fig. 2.1

A laser beam does not deform flexible materials as a mechanical drill would, so it can drill holes in materials such as soft rubber nipples for baby bottles. Likewise, laser beams can drill or cut into extremely hard materials without dulling bits or blades. Laser machining is not dependent on the material hardness but on the optical properties of the laser and the optical and thermo-physical properties of the material. For example, lasers have drilled holes in diamond dies used for drawing wire.Several recent research have shown that laser cutting is best achieved with ultrafast lasers (Fig. 2), as the material only ablates and does not get a chance to melt under such ultrafast time scale interactions.

1.2 Laser cutting

In the simplest terms, a CNC laser cutter uses a coherent beam of light to cut material, most often sheet metal, but also wood, diamond, glass, plastics and silicon. In the beginning, the beam was directed through a lens via mirrors, but these days fiber optics are much more common. The lens focuses the beam at the work zone to burn, melt or vaporize the material. Exactly which process(es) the material undergoes depends on the type of laser cutting involved.

Broadly speaking, laser cutting can be divided into two types: laser fusion cutting and ablative laser cutting. Laser fusion cutting involves melting material in a column and using a high-pressure stream of gas to shear the molten material away, leaving an open cut kerf. In contrast, ablative laser cutting removes material layer by layer using a pulsed laser—it's like chiseling, only with light and on a microscopic scale. This generally means evaporating the material, rather than melting it. Two other key factors distinguish laser fusion cutting from ablative laser cutting.

Fig. 2.1

First, ablative laser cutting can be used to make partial cuts in a material, whereas laser fusion cutting can only be used to cut all the way through it. This is due to fusion cutting operating with lasers either in continuous waves or with significantly longer pulses than ablative cutting (micro- or milliseconds vs. nanoseconds), which causes a molten pool to penetrate the entire depth of the metal. This molten material must be sheared away via gas stream, otherwise it can stay in the kerf and weld back cut edges upon cooling.

The second and more significant factor that distinguishes these two types of laser cutting is speed. "With sheet metal cutting—which makes up the bulk of the cutting industry. At the current state of laser technology, laser fusion cutting is much faster for those setups. Ablative cutting takes more time, for now.

Fiber Lasers vs CO_2

The two most common types of laser cutting machines are fiber laser and CO_2.

CO_2 lasers use an electromagnetically stimulated gas—typically, a mixture of carbon dioxide, nitrogen and sometimes hydrogen, xenon or helium—as their active laser medium. In contrast,

fiber lasers—which are a type of solid-state laser—use an optical fiber doped with rare-earth elements, such as erbium, ytterbium, neodymium or dysprosium. As indicated by Houldcroft's experiments, the industry began with CO_2, and that technology dominated until only recently. "Potentially, CO_2 lasers will be replaced completely. If so, this would happen mid-term while the fiber laser technology further evolves. Currently, CO_2 lasers still have some specific advantages, e.g., better edge quality in thick material and smaller burrs.

CNC laser cutters are used on a wide range of materials in a variety of industries. Since cutting sheet metal is the most common application, it's worth focusing on the particularities involved. For instance, reflectance and surface thickness are two of the most important factors to consider.

Laser cutting uses high-pressure gas—5-25 bars for nitrogen cutting—so you need the parts to either be supported by their own weight, which works if they're thicker than 2-3 mm and relatively large in size, but for the parts that are thin and small, to resist the force of the gas stream, small sections need to remain uncut," Sarrafi said. "These micro-joints are very small, 0.2-0.4 mm wide, so they're easy to break in post processing, but sometimes they're necessary to connect the parts to the frame so the parts don't fly away

1.3 Laser welding

Laser welding is used more frequently in industrial processes because it has wider application than traditional welding as less heat is created because the beam is so focused. This means that heat transfer to the workpiece is much less and the metallurgical structure is less affected and the quality of the weld is much higher than with traditional forms of welding.

Laser welding is a much more accurate manufactoring process and welds can be as small as one hundredths of a millimetre. Small pulses of heat are used to create the weld which leads to a higher quality finish which is stronger providing a better depth to width ratio. Depending on the power of the laser, welding penetration up to 15 millimetre of steel or stainless steel can be achieved.

Another distinct advantage of laser welding over other methods is that lasers can weld a greater variety of metals such as high strength stainless steel, titanium, aluminium, carbon steel as well as precious metals like gold and silver.

With laser welding, welds are much more accurate and finish is superior as is strength. The manufactoring process is therefore excellent for fine components and it can be used in areas where there is limited access. Lasers enable precision and quality where required for fine components.

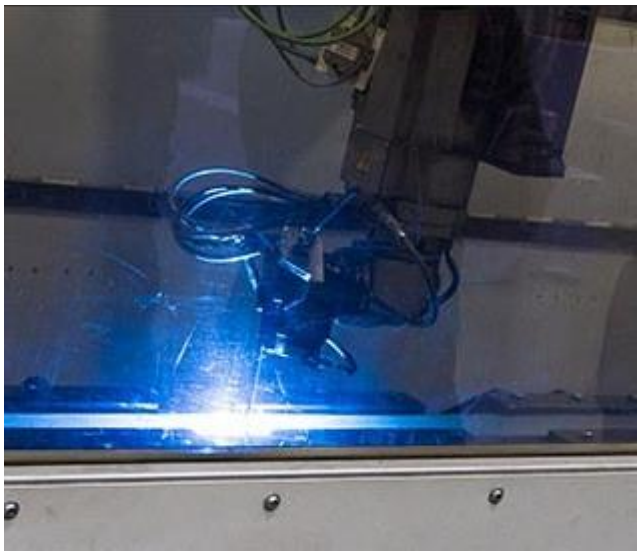

Fig. 2.1

Summary of Laser Welding Advantages

- Aesthetically better weld finishes
- More suited to high value items such as jewellery
- Great for inaccessible places
- Ideal for solenoids and machined components
- Perfect for medical devices where weld quality is vital for hygiene and precision
- Better weld quality for a variety of metals and metal depths
- No concerns for weld weaknesses due to minimal distortion
- Workpieces can be handled almost immediately because heat transference is low
- Overall improved productivity

The benefits of laser welding for modern processes over traditional welding are many. Laser welding overall has a much wider application and an ability to weld a greater number of metals to a much higher quality which is vital where precision engineering is required.

Laser - Hole drilling

We will describe the physical processes that occur in the interaction of high-power laser radiation with surfaces. An understanding of these processes is important for understanding thecapabilities and limitations of laser vaporization. We will emphasize metallic targets, but muchof what is said applies to other absorbing surfaces as well.

Lasers used—The Nd:YAG laser has often been used for drilling holes in metals. It can deliver an irradiance of 106–109 watts/cm2 to a target surface. For most metals, it offers lower reflectivity than the CO_2 laser, so that less light energy is lost by reflection. It also offers high processing speed. The CO_2 laser, with a wavelength 10 times larger than the Nd:YAG laser, has less importance in drilling of metals, because the beam cannot be focused to as small a spot, and because the absorption is not so high as for the Nd:YAG laser. But for many nonmetals, like alumina, the absorption is much higher for the CO_2 laser than for the Nd:YAG laser. Thus, CO_2 lasers have an important role in the drilling of materials like ceramics and plastic. The copper vapor laser, with a high pulse repetition rate, has also found a role in the drilling of metals. Excimer lasers offer material removal with relatively little heating of the surrounding material, because the chemical bonds in the target can be broken by shorter, ultraviolet wavelengths of the excimer laser. The material is removed without significant thermal conduction of heat into the interior of the workpiece. Thus, excimer lasers may be used for hole drilling in materials that are sensitive to heat, like plastics.

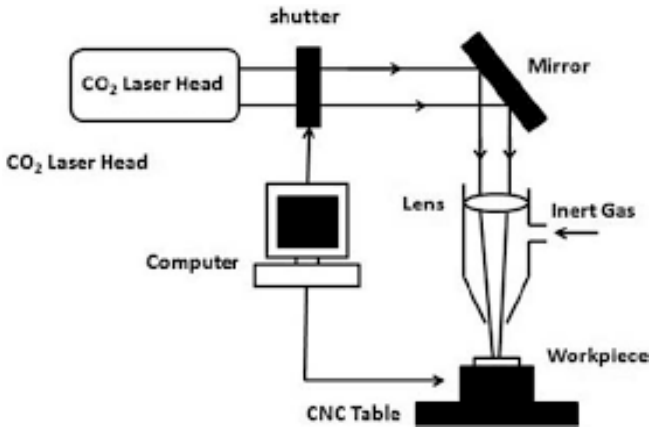

Fig. 2.1

Depth of holes—When high-power laser radiation is absorbed by a target, the surface is heated by the incoming laser light. The surface temperature goes quickly through the melting point and reaches the vaporization temperature (boiling point). Material begins to vaporize and a hole is produced in the surface. When a pulsed laser beam with duration around 1 millisecond interacts with a surface, the process of material involves conventional heating, melting, and vaporization. The time scale is 10 Optics and Photonics Series, Photonics-Enabled Technologies: Manufacturing long enough so that vaporized material can flow away from the point of the interaction. Vaporization occurs at a continually retreating surface.

	Absorbed laser irradiance (watts/cm^2)		
Metal	**10^5**	**10^6**	**10^7**
Lead	118 μs	1.18 μs	12 ns
Zinc	128 μs	1.28 μs	13 ns
Magnesium	245 μs	2.45 μs	24.5 ns
Nickel	1.84 ms	184 μs	184 ns
Iron	1.86 ms	186 μs	186 ns
Aluminum	2.67 ms	26.7 μs	267 ns
Molybedenum	5.56 ms	55.6 μs	556 ns
Copper	8.26 ms	82.6 μs	826 ns
Tungsten	10.46 ms	104.6 μs	1.05 μs

Advantages

Hole drilling with lasers offers many advantages over competing techniques.

1. There is no contact of external materials with the workpiece, and hence, no contamination.
2. Hard, brittle materials that are difficult to drill with conventional techniques are often easily drilled with lasers.
3. The heat-affected zones around the holes can be very small.
4. It is possible to produce very small holes in thin materials.
5. Laser drilling is compatible with automation, so that it is possible to produce large numbers of holes and complex patterns of holes in a completely automated process.
6. There is no wear of expensive tool bits, so that in some cases, laser drilling offers an economic advantage.
7. Holes can be drilled with high throughput rate, so that the cost is low.

Limitations

Laser hole drilling, of course, will not completely replace conventional hole drilling. There are a number of limitations for laser hole drilling.

1. Laser energy is relatively expensive and may not compete economically with other processes for specific applications.
2. The holes drilled by lasers tend to have limited depth. One might think that one could use a CO_2 laser and allow it to dwell on a spot for a long time. But the heat then spreads over a 1arger volume and much of the advantage in using lasers is lost.
3. There may be a recondensation of vaporized material around the entrance to the hole, which forms a crater-like lip. The lip can be removed fairly easily, but this adds one more step to the laser-drilling process.

1.4 Surface hardening

Laser beams are invisible electromagnetic radiations in the infra-red portion of the spectrum, and are increasingly being used for surface-hardening of ferrous materials to improve mechanical properties like wear resistance and even fatigue resistance. There are two main type of Lasers used- YAG Solid-state type and the carbon-dioxide gas type. The output of YAG laser has much shorter wavelength, 1.064 µm, whereas the carbon dioxide laser emits radiations with 10.8 µm wavelength. Carbondioxide laser is more commonly used and is suitable for surface hardening, particularly when the process requires more than 500 W of power.

The power density of laser beam is usually expressed as watts per square centimeter. The power densities used in laser surface hardening are in the range of 500 to 5000 W/cm2 with dwell times in the range of 0.1 s to 10 s. For carbon steels, power densities used are from 1000 to 1500W/cm2 with dwell time of 1 to 2 s.

During Laser surface hardening, a laser can generate very intense energy fluxes at the surface of the component, when the Laser radiations impinge on it, and are absorbed to generate heat energy. This heat is then conducted inside the component. When the power density of the laser beam is high, the rate of heat generation is much higher than the rate of heat conduction. The temperature of the surface layer increases rapidly to soon attain the austenitising temperature.

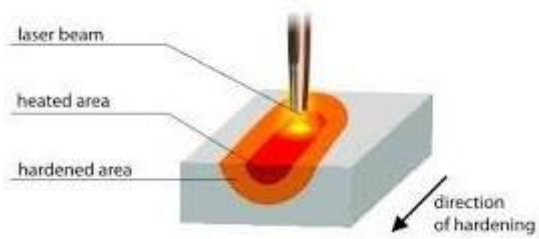

Fig. 2.1

A moderate power density of 500 W/m2, results in temperature gradient of 500°C/mm. The laser beam may be moved over the surface of the component as illustrated in Fig. 8.78. The surface which meets the laser beam gets heated up. Once the beam passes over, the heated volume gets subsequently ‘self-quenched’. Thus, by selecting power density and the speed of the laser spot (i.e., the dwell time), a desired case depth can be hardened.

Laser-surface-hardening is similar to any other surface-hardening method such as induction, or flame, except that the laser beam is used to generate heat here. The heating time to the austenitising temperature, particularly in laser heating, is very short-fractions of seconds to few seconds. The dwell time cannot be made very large as surface melting may occur which is undesirable.

Alloy steels intended to have higher hardenabilities should have very fine carbides particles even then their dissolution is difficult. Diffusion of carbon though faster than alloying elements requires longer dwell time (low speed of motion of laser spot) to obtain homogeneous structure.

$$Y = -0.11 + 3.02\, P/\sqrt{D_b\, V}$$

where,

Y = depth of hardening (mm),

P = Laser power (W),

Db = incident beam diameter (mm)

V = travel speed (mm/s)

but with a considerable scatter of experimental data. At a constant value of P/√DhV, the depth of hardening can vary by a factor of 2.

Advantages and Disadvantages of Laser Hardening:

1. Non-hardenable steels like mild steels can be surface hardened.

2. Hardness obtained is slightly higher than conventional hardening.

3 Closer control over power inputs helps in eliminating dimensional distortion.

4. Beam (with the help of optical parts) can easily reach the inaccessible areas of components, and re-entrant surfaces.

5. No vacuum or protective atmosphere is required.

6. The last optical element of the Laser and the component to be surface hardened may be far-placed.

7. Very long and irregular-shaped components can be hardened easily.

Disadvantages:

1. High initial cost particularly of large lasers.

2. Lasers use 10% of the input energy, i.e., there are inefficient.

3. The depth of case is very limited.

4. Working cost is high.

1.5 Medical Applications

Surgical removal of tissue with a laser is a physical process similar to industrial laser drilling. Carbon-dioxide lasers operating at 10.6 micrometers can burn away tissue as the infrared beams are strongly absorbed by the water that makes up the bulk of living cells. A laser beam cauterizes the cuts, stopping bleeding in blood-rich tissues such as gums. Similarly, laser wavelengths near one micrometer (Neodymium-YAG Laser) can penetrate the eye, welding a detached retina back into place, or cutting internal membranes that often grow cloudy after

cataract surgery (Fig. 5a). Less-intense laser pulses can destroy abnormal blood vessels that spread across the retina in patients suffering from diabetes, delaying the blindness often associated with the disease. Ophthalmologists surgically correct visual defects by removing tissue from the cornea, reshaping the transparent outer layer of the eye with intense ultraviolet pulses from Excimer Lasers.

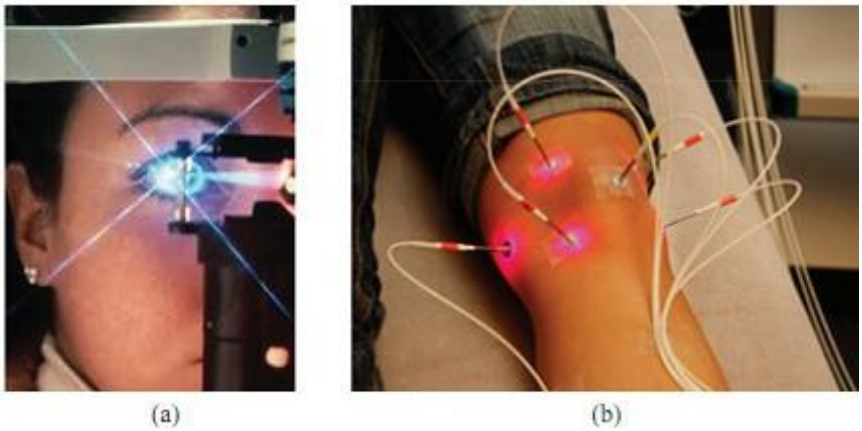

Fig. 2.1 (a) Schematic of Laser Eye Surgery. (b) Laser energy delivery to precise spots in joints for arthroscopic surgery.

Laser light can be delivered to places within the body that the beams could not otherwise reach through optical fibers similar to the tiny strands of glass that carry information in telephone systems. One important example involves threading a fiber through the urethra and into the kidney so that the end of the fiber can deliver intense laser pulses to kidney stones. The laser energy splits the stones into fragments small enough to pass through the urethra without requiring surgical incisions. Fibers also can be inserted through small incisions to deliver laser energy to precise spots in the knee joint during arthroscopic surgery (Fig. 5b). Another medical application for lasers is in the treatment of skin conditions. Pulsed lasers can bleach certain types of tattoos as well as dark-red birthmarks called port-wine stains. Cosmetic laser treatments include removing unwanted body hair and wrin-kles.

1.6 Biomedical Imaging and superresolution

Confocal microscopy (Fig. 6) is a ubiquitous imaging tool for imaging thick specimen in a wide range of investigations in biological, medical and material sciences. It uses UV or visible light for the single photon excitation of fluorophore from ground state to the excited state followed by deactivation through fluorescence emission which is detected through high quantum efficiency photomultiplier tube (PMT) in the range of near ultraviolet, visible and near infrared spectral region. The basic difference of confocal Light Scanning Microscope with the conventional optical microscope is the confocal aperture arranged in a plane conjugate to the intermediate image plane and thus, to the object plane of the microscope. The PMT can only detect the light that passed the pinhole. As the laser beam is focused to a diffraction limited spot, which illuminates only a point of the object at a time, the point illuminated and the point observed are

situated in conjugate planes, i.e. they are focused onto each other. The perfection of focused beam which is connected to the resolution has always been a matter of concern in the far-field fluorescence microscopy. Still, optical microscopy remains the best choice for monitoring live specimens despite the resolution advantage of, say electron microscopes, since the energy deposited in electron microscopy adversely affects the viability of live specimens. This practical compromise implicitly sets resolution enhancement as one of the most important development in optical microscopy. Finally, all these images are combined into one super-resolved image with complete structural information. They demonstrated this method first in 2006 and called it Photo Activated Localization Microscopy (PALM)

1.7 Laser Imaging and Holography

Holography is a much broader field than most people have perceived. Recording and displaying truly three-dimensional images are only small parts of it. Holographic optical elements (HOE) can perform the functions of mirrors, lenses, gratings, or combinations of them, and they are used in myriad technical devices. Holographic interferometry measures microscopic displacements on the surface of an object and small changes in index of refraction of transparent objects like plasma and heat waves.

The coherence of laser light is crucial for interferometry and holography, which depend on interactions between light waves to make extremely precise measurements and to record three-dimensional images. The result of adding light waves together depends on their relative phases. If the peaks of one align with the valleys of the other, they will interfere destructively to cancel each other out; if their peaks align, they will interfere constructively to produce a bright spot. This effect can be used for measurement by splitting a beam into two identical halves that follow different paths. Changing one path just half a wavelength from the other will shift the two out of phase, producing a dark spot. This technique has proved invaluable for precise measurements of very small distances. Holograms are made by splitting a laser beam into two identical halves, using one beam to illuminate an object. This object beam then is combined with the other half—the reference beam—in the plane of a photographic plate, producing a random-looking pattern of light and dark zones that record the wave front of light from the object (Fig. 4). Later, when laser light illuminates that pattern from the same angle as the reference beam, it is scattered to reconstruct an identical wave front of light, which appears to the viewer as a three-dimensional image of the object. Holograms now can be mass-produced by an embossing process, as used on credit cards, and do not have to be viewed in laser light.

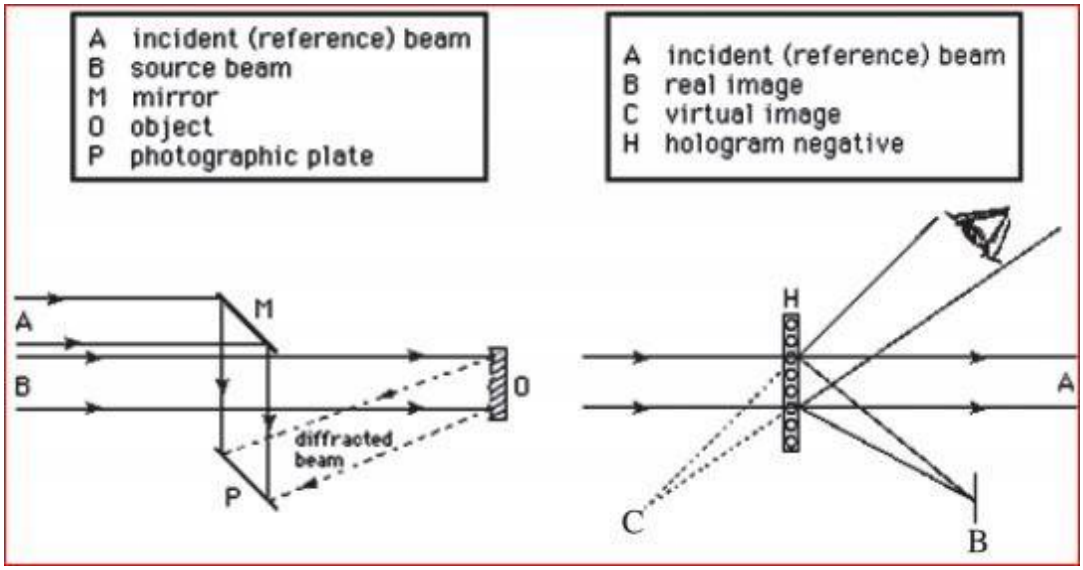

Fig. 2.1 Schematic of Holography process where the laser beam is split into three components. First two beams are needed to create the hologram which is viewed with the help of the third.

1.7.1 TYPES OF HOLOGRAMS

A hologram is a recording in a two- or three-dimensional medium of the interference pattern

formed when a point source of light (the reference beam) of fixed wavelength encounters light of the same fixed wavelength arriving from an object (the object beam). When the hologram is illuminated by the reference beam alone, the diffraction pattern recreates the wave fronts of light from the original object. Thus, the viewer sees an image indistinguishable from the original object.

- The reflection hologram
- Transmission holograms
- Hybrid holograms

1.7.2 Recording and reconstruction of holograms

Recording of hologram. The recording of hologram is based on the phenomenon of interference. It requires a laser source, a plane mirror or beam splitter, an object and a photographic plate. A laser beam from the laser source is incident on a plane mirror or beam splitter. As the name suggests, the function of the beam splitter is to split the laser beam. One part of splitted beam, after reflection from the beam splitter, strikes on the photographic plate. This beam is called reference beam. While other part of splitted beam (transmitted from beam

splitter) strikes on the photographic plate after suffering reflection from the various points of object. This beam is called object beam.

The object beam reflected from the object interferes with the reference beam when both the beams reach the photographic plate. The superposition of these two beams produces an interference pattern (in the form of dark and bright fringes) and this pattern is recorded on the photographic plate. The photographic plate with recorded interference pattern is called hologram. Photographic plate is also known as Gabor zone plate in honour of Denis Gabor who developed the phenomenon of holography.

Each and every part of the hologram receives light from various points of the object. Thus, even if hologram is broken into parts, each part is capable of reconstructing the whole object.

Reconstruction of image.

In the reconstruction process, the hologram is illuminated by laser beam and this beam is called reconstruction beam. This beam is identical to reference beam used in construction of hologram.

The hologram acts a diffraction grating. This reconstruction beam will undergo phenomenon of diffraction during passage through the hologram. The reconstruction beam after passing through the hologram produces a real as well as virtual image of the object.

One of the diffracted beams emerging from the hologram appears to diverge from an apparent object when project back. Thus, virtual image is formed behind the hologram at the original site of the object and real image in front of the hologram. Thus an observer sees light waves diverging from the virtual image and the image is identical to the object. If the observer moves round the virtual image then other sides of the object which were not noticed earlier would be observed. Therefore, the virtual image exhibits all the true three dimensional characteristics. The real image can be recorded on a photographic plate.

1.7.3 Applications of holography

- The three-dimensional images produced by holograms have been used in various fields, such as technical, educational also in advertising, artistic display etc.
- Holographic diffraction gratings: The interference of two plane wavefronts of laser beams on the surface of holographic plate produces holographic diffraction grating. The lines in this grating are more uniform than in case of conventional grating.
- Hologram is a reliable object for data storage, because even a small broken piece of hologram contains complete data or information about the object with reduced clarity.
- The information-holding capacity of a hologram is very high because many objects can be recorded in a single hologram, by slightly changing ...

1.8 Holography –Future Applications

Holography is a very useful tool in many areas, such as in commerce, scientific research, medicine, and industry.

Some current applications that use holographic technology are:

- Holographic interferometry is used by researchers and industry designers to test and design many things, from tires and engines to prosthetic limbs and artificial bones and joints.
- Supermarket and department store scanners use a holographic lens system that directs laser light onto the bar codes of the merchandise.

- Holographic optical elements (HOE's) are used for navigation by airplane pilots. A holographic image of the cockpit instruments appears to float in front of the windshield. This allows the pilot to keep his eyes on the runway or the sky while reading the instruments. This feature is available on some models of automobiles.

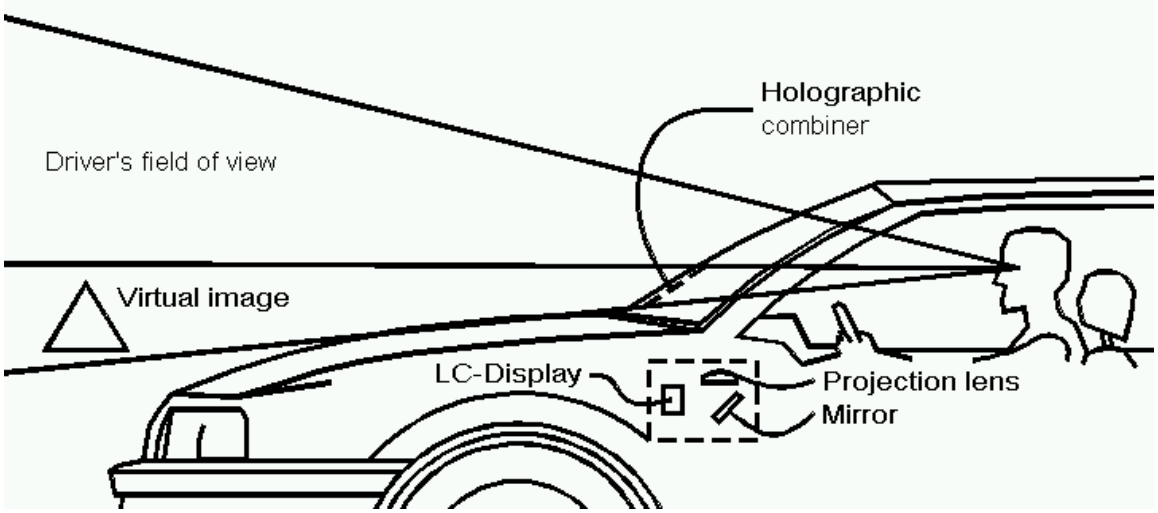

Fig. 2.1

- Medical doctors can use three-dimensional holographic CAT scans to make measurements without invasive surgery. This technique is also used in medical education.

- Holograms are used in advertisements and consumer packaging of products to attract potential buyers.

- Holograms have been used on covers of magazine publications. One of the most memorable Sports Illustrated covers was the December 23, 1992 issue featuring Michael Jordan. Holograms have also been used on sports trading cards.
- The use of holograms on credit cards and debit cards provide added security to minimize counterfeiting.

- Holography has been used to make archival recordings of valuable and/or fragile museum artifacts.

- Sony Electronics uses holographic technology in their digital cameras. A holographic crystal is used to allow the camera to detect the edge of the subject and differentiate between it and the background. As a result, the camera is able to focus accurately in dark conditions.

- Holography has been use by artists to create pulsed holographic portraits as well as other works of art.

Future applications of holography include:

- Future colour liquid crystal displays (LCD's) will be brighter and whiter as a result of holographic technology. Scientists at Polaroid Corp. have developed a holographic reflector that will reflect ambient light to produce a whiter background.

- Holographic night vision goggles

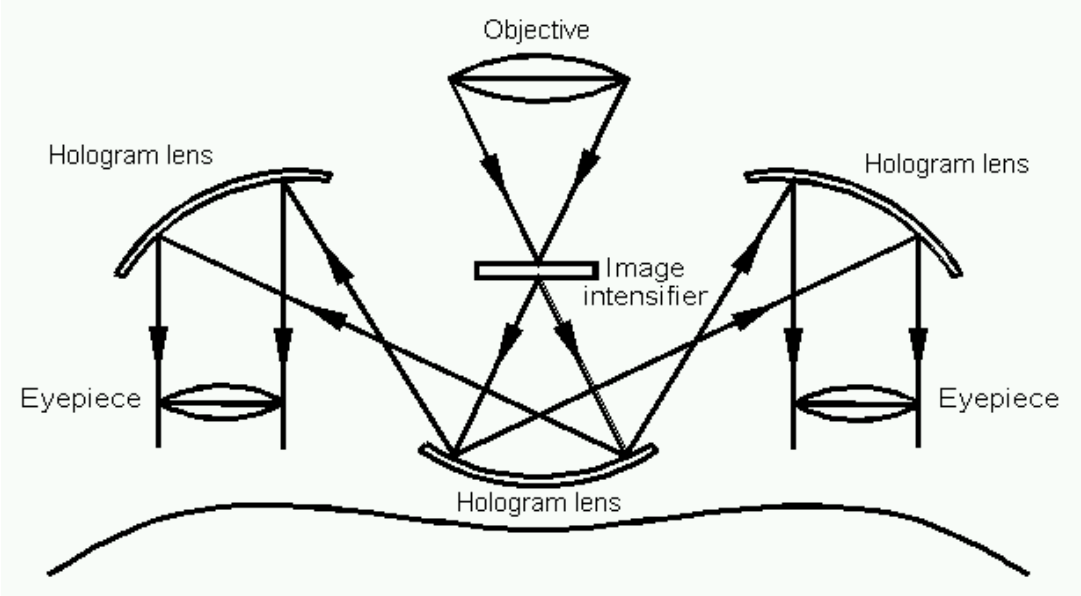

Fig. 2.1

- Many researchers believe that holographic televisions will become available within 10 years at a cost of approximately $5000. Holographic motion picture technology has been previously attempted and was successful in the 1970s. The future of holographic motion pictures may become a reality within the next few years.

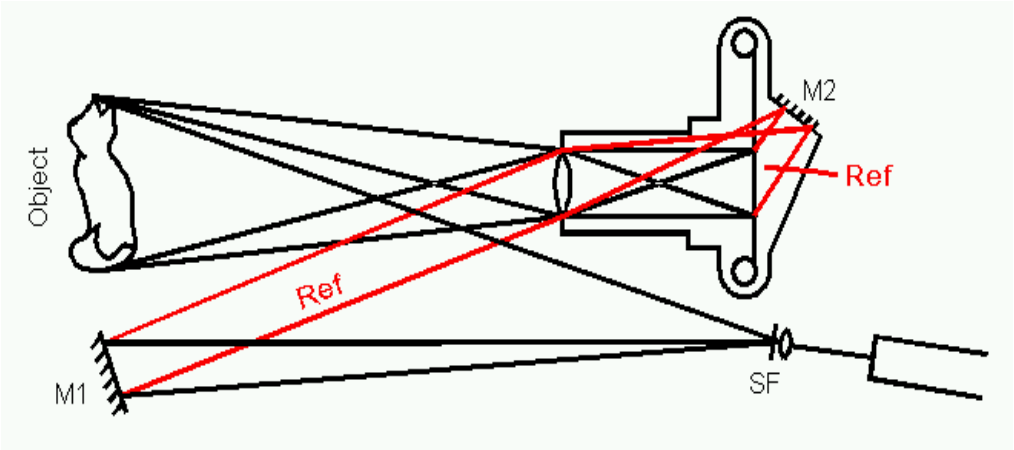

Fig. 2.1

- Holographic memory is a new optical storage method that can store 1 terabyte (= 1000 GB) of data in a crystal approximately the size of a sugar cube. In comparison, current methods of storage include CD's that hold 650 to 700 MB, DVD's that store 4.7 GB, and computer hard drives that hold up to 120 GB.

- Optical computers will be capable of delivering trillions of bits of information faster than the latest computers.

1.9 MEDICAL ENDOSCOPE - FIBER OPTIC: CONSTRUCTION AND WORKING

Optical fibers are very much useful in medical field. Using low quality, large diameter and short length silica fibers we can design a fiber optic endoscope or fibroscope.

MEDICAL ENDOSCOPE

Optical fibers are very much useful in medical field. Using low quality, large diameter and short length silica fibers we can design a fiber optic endoscope or fibroscope. A medical endoscope is a tubular optical instrument, used to inspect or view the internal parts of human body which are not visible to the naked eye. The photograph of the internal parts can also be taken using this endoscope.

Construction

Figure shows the structure of endoscope. It has two fibers viz., 1. Outer fiber(f0)
2. The inner fiber (fi).

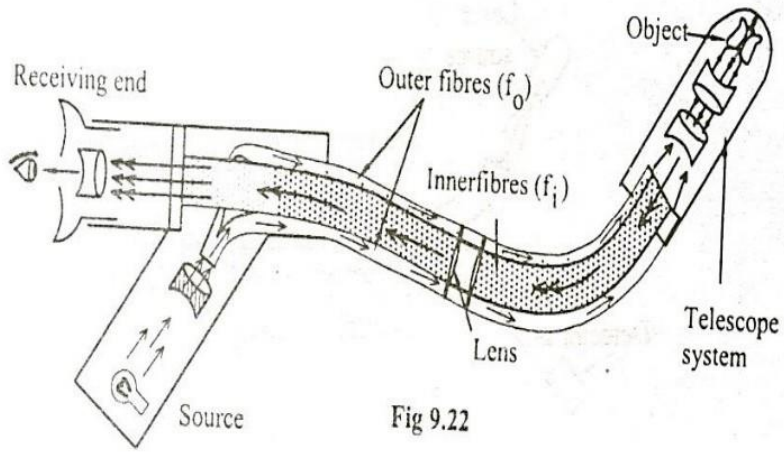

Fig 9.22

Outer fiber

The outer fiber consists of many fibers bundled together without any particular order of arrangement and is called incoherent bundle. These fiber bundles as a whole are enclosed in a thin sleeve for protection. The outer fiber is used to illuminate or focus the light onto the inner parts of the body.

Inner fiber

The inner fiber also consists of a bundle of fibers, but in perfect order. Therefore this arrangement is called coherent bundle. This fiber is used to collect the reflected light from the object. A tiny lens is fixed to one end of the bundle in order to effectively focus the light, reflected from the object. For a wider field of view and better image quality, a telescope system is added in the internal part of the telescope.

Working

Light from the source is passed through the outer fiber (f0). The light is illuminated on the internal part of the body. The reflected light from the object is brought to focus using the telescope to the inner fiber (fi). Here each fiber picks up a part of the picture from the body. Hence the picture will be collected bit by bit and is transmitted in an order by the array of fibers. As a result, the whole picture is reproduced at the other end of the receiving fiber as shown in the figure. The output is properly amplified and can be viewed through the eye piece at the receiving end. The cross sectional view is as shown in the figure.

In figure, we can see that along with input and output fibers, we have two more channels namely, (i) Instrumental Channel (C1) and (ii) Irrigation channel (C2) used for the following purposes.

Instrumental Channel (C1)
It is used to insert or take the surgical instruments needed for operation.

Irrigational Channel (C2)

It is used to blow air or this is used to clear the blood in the operation region, so that the affected parts of the body can be clearly viewe