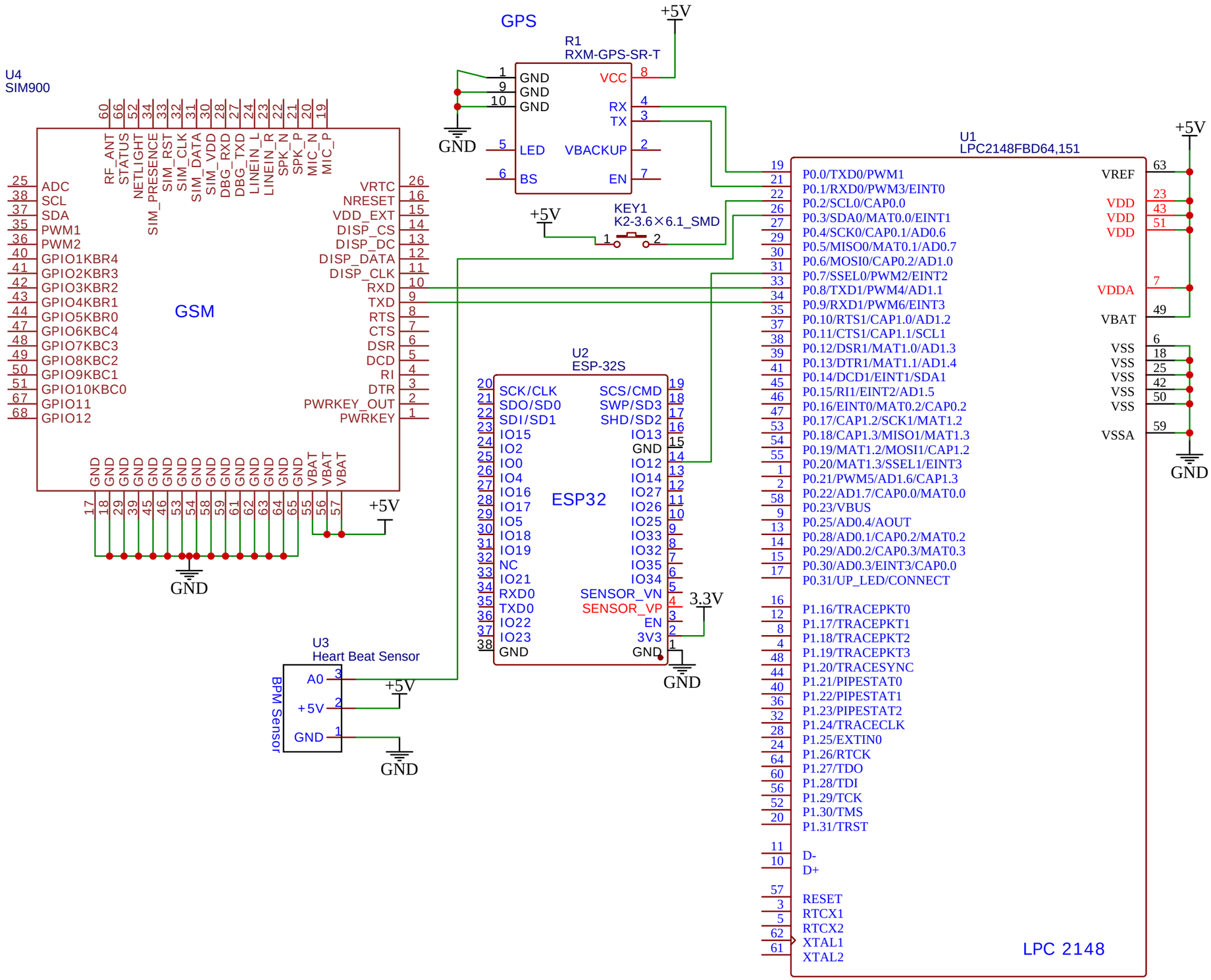

TITLE: IoT based safety gadget		REV: 1.0
EasyEDA	Company: Your Company	Sheet: 1/1
	Date: 2020-08-14 Drawn By: RONS009	