Unleashing UVM™

ALU SPECIFICATION

SystemVerilog, UVM - training, methodology consulting, auditing & debug

Copyright 2012, www.cvcblr.com

BLOCK DIAGRAM

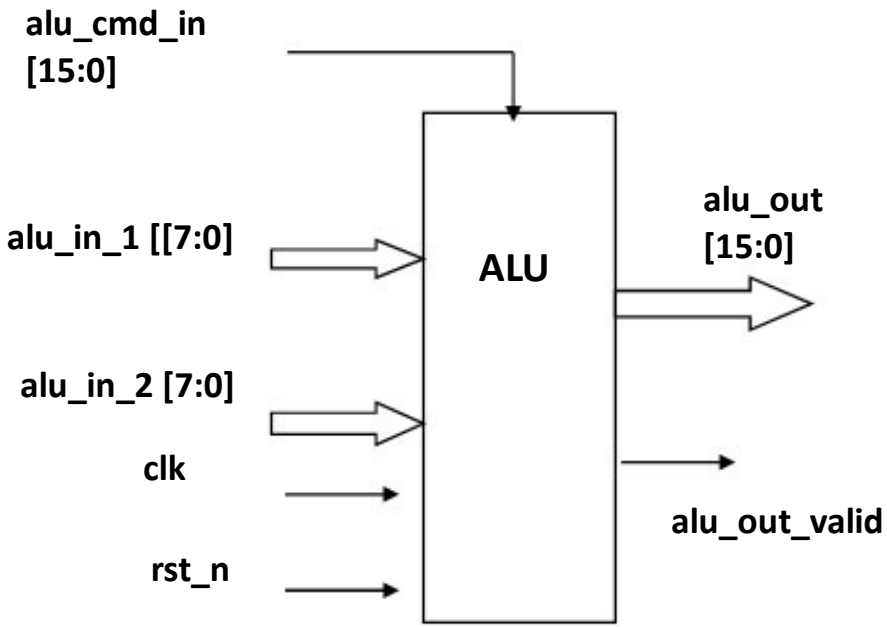

Copyright 2012, www.cvcblr.com

Port list

SIGNAL	DIRECTION	WIDTH	DESCRIPTION
clk	Input	1 bit	Clock 50 MHz.
rst_n	Input	1 bit	Active Low reset.
alu_cmd_in [15:0]	Input	16 bits	Command One-hot encoded
alu_in_1 [7:0]	Input	8 bits	Operand 1 (signed/unsigned)
alu_in_2 [7:0]	Input	8 bits	Operand 2 (unsigned)
alu_out [15:0]	output	16 bits	ALU Output, qualified with alu_out_valid
alu_out_valid	output	1 bit	ALU Output Valid with 2 clock latency

Copyright 2012, www.cvcblr.com

Functional description in brief

- ALU - Arithmetic & Logic Unit
- Performs several arithmetic & logical such as:
  - Addition
  - Subtraction
  - Multiplication
  - Division
  - Shift etc. (See next slide for details)

Copyright 2012, www.cvcblr.com

ALU Operations

alu_cmd_in [bit_position]	Description
0	ADD
1	SUB(*op*1-*op*2)
2	*op1* Left shift by *op2* (LS)
3	*op1* Right shift by *op2* (RS)
4	Bitwise OR (B_OR)
5	Logical AND (L_AND)
6	Bitwise XNOR (B_NOR)

alu_cmd_in [bit_position]	Description
7	Logical OR (L_OR)
8	*op1* reduction XNOR (R_XNOR)
9	*op1* reduction XOR (R_XOR)
10	Multiplication (MULT)
11	Division (DIV)
12	Modulus (MOD)
13	*op1* with SIGN bit Left shift by *op2* (LS_W_S)
14	*op1* with SIGN bit Right shift by *op2* (RS_W_S)

Copyright 2012, www.cvcblr.com

Functional description - details

- alu_cmd_in is ONE-HOT encoded
  - all 0 - indicates NOP
- Output is qualified with a valid signal
  - Standard latency is 2 clocks for all operations
- For most operations, inputs are treated as UNSIGNED
  - Except LS_W_S, RS_W_S operations

Copyright 2012, www.cvcblr.com
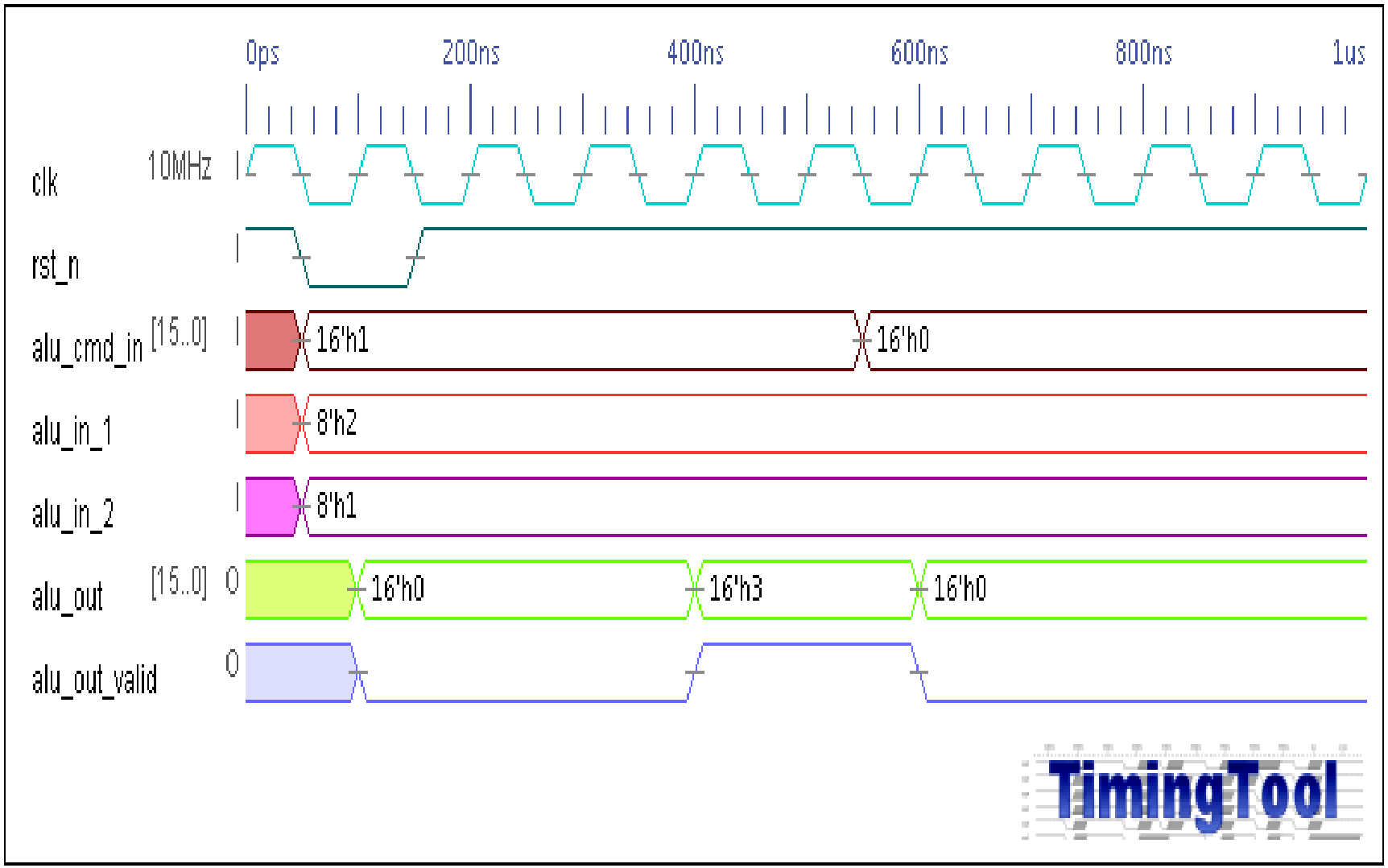
Timing_Diagram