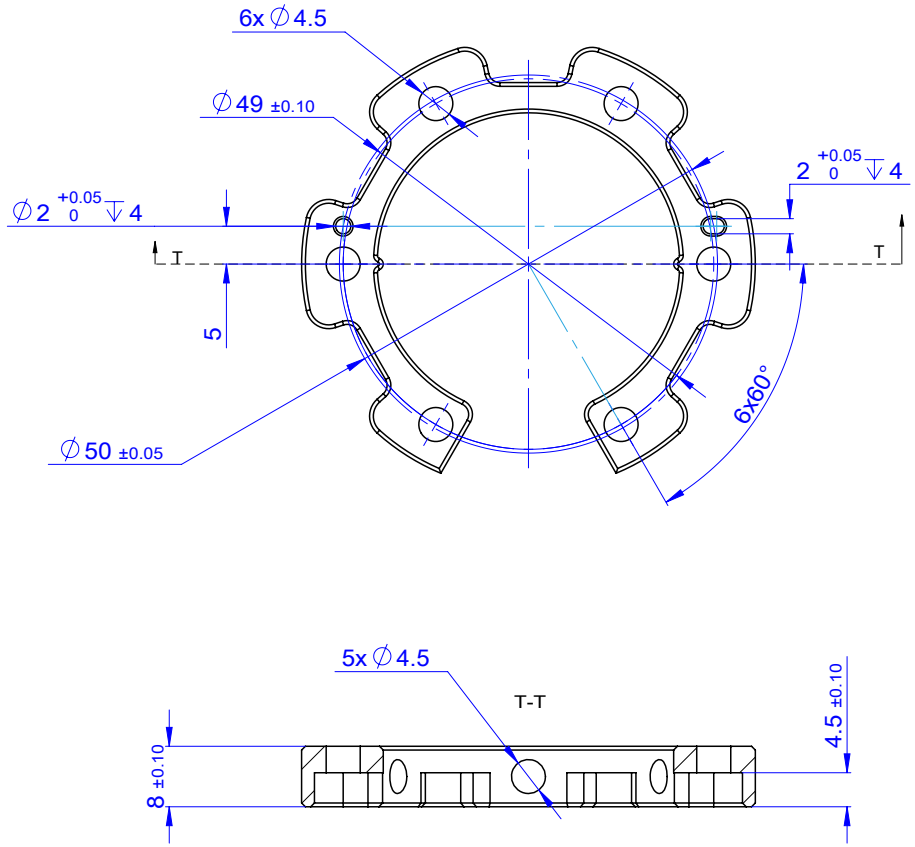

TITLE: Original-Flange-Adapter-Wave1.3		sharpa	
SCALE	1:1	PROJECTION	
UNIT	mm	REV.	01