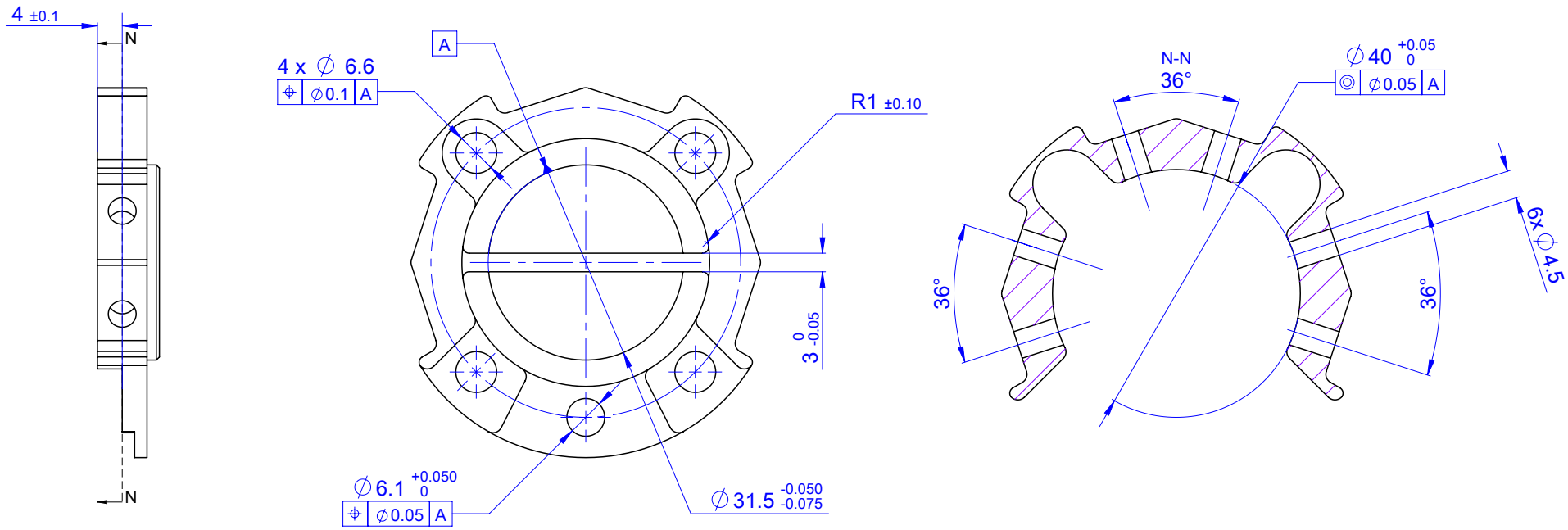

TITLE: Flange-Adapter		sharpa	
SCALE	1:1	PROJECTION	
UNIT	mm	REV.	01

URDF Supplementary Instructions

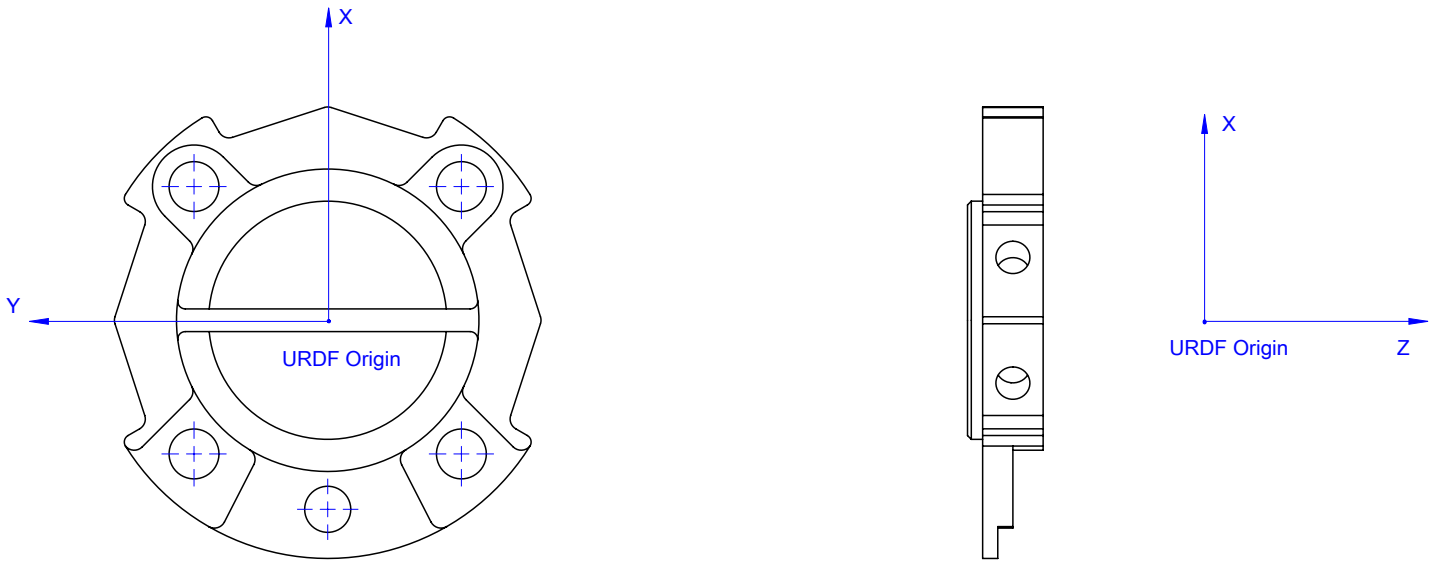

1. The URDF model origin shall coincide with the STEP export origin.
2. The coordinate system orientation of the URDF model shall be identical to that of the STEP export.

TITLE: Flange-Adapter		sharpa	
SCALE	1:1	PROJECTION	
UNIT	mm	REV.	01