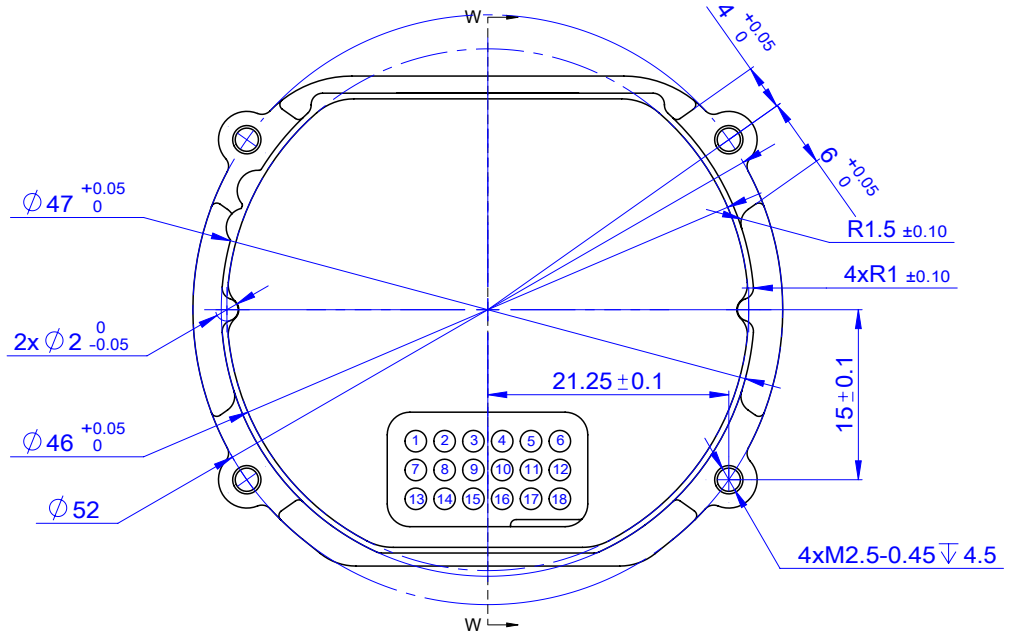

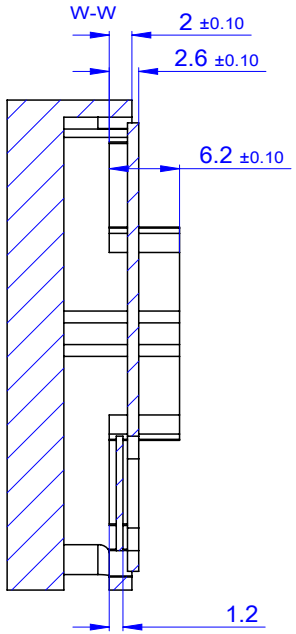

15	MDI0_N	1000Base-T Ethernet
9	MDI0_P	
16	MDI1_N	
10	MDI1_P	
17	MDI2_N	
11	MDI2_P	
18	MDI3_N	
12	MDI3_P	
1	PWR	Power Input (Positive)
2	PWR	
3	PWR	
4	GND	Power Input (Negative)
5	GND	
6	GND	
7	RESERVED	Do Not USE
8	RESERVED	Do Not USE
13	FAN_PWR	Fan Power Supply Voltage , 0.2AMAX @6V
14	RESERVED	Do Not USE

TITLE: Internal Interface		sharpa	
SCALE	1.5:1	PROJECTION	
UNIT	mm	REV.	01

URDF Supplementary Instructions

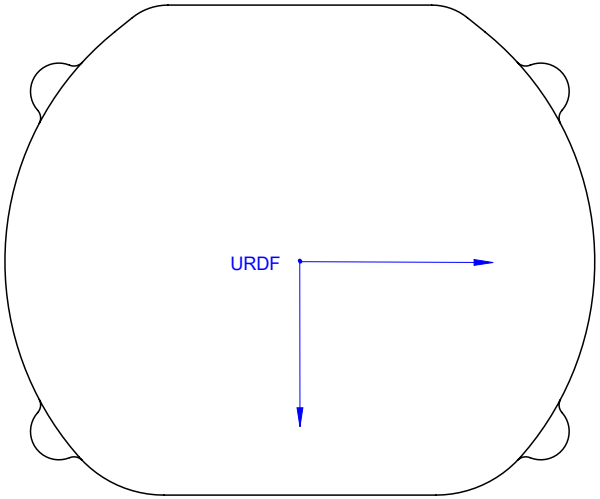

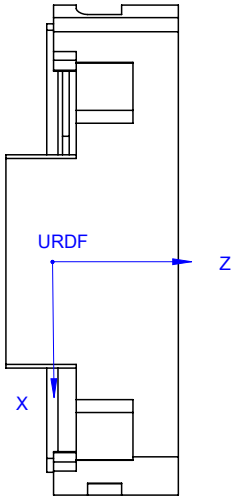

1. The URDF model origin shall coincide with the STEP export origin.
2. The coordinate system orientation of the URDF model shall be identical to that of the STEP export.

TITLE: Internal Interface		sharpa	
SCALE	1.5:1	PROJECTION	
UNIT	mm	REV.	01