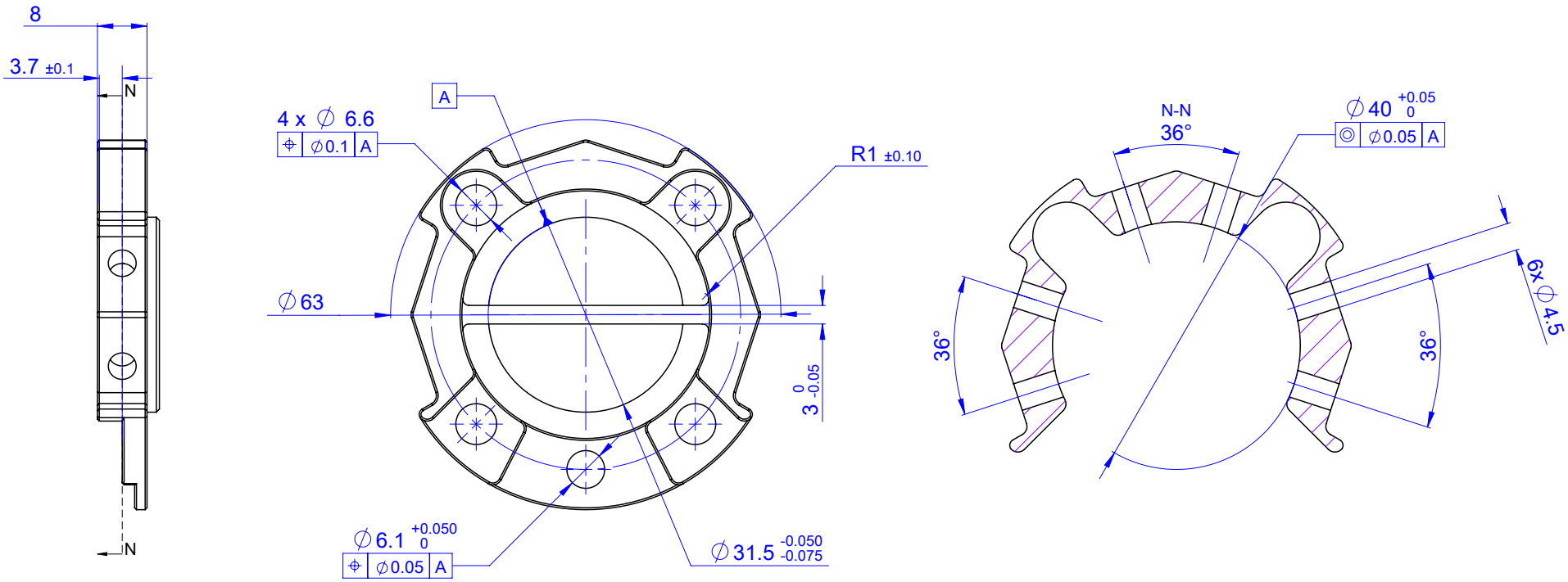
8
3.7 ±0.1
N
N
4 x ∅ 6.6
⌖ ∅0.1 A
A
R1 ±0.10
∅63
3 0 -0.05
∅6.1 +0.050 0
⌖ ∅0.05 A
∅31.5 -0.050 -0.075
N-N
36°
∅40 +0.05 0
◎ ∅0.05 A
36°
36°
6x ∅4.5