2023 6th International Conference on Information Systems and Computer Networks (ISCON)
GLA University, Mathura, India. Mar 3-4, 2023

CNN-LSTM Based Approach for Sleep Apnea Detection

Nakul Saroha
Dept of Computer Science and Engineering
Delhi Technological University
New Delhi, India
nakulsaroha08@gmail.com

Mihir Aryan
Dept of Computer Science and Engineering
Delhi Technological University
New Delhi, India
mihiraryan11@gmail.com

Mayank Singh
Dept of Computer Science and Engineering
Delhi Technological University
New Delhi, India
mayank190801@gmail.com

Anurag Goel
Dept of Computer Science and Engineering
Delhi Technological University
New Delhi, India
anurag@dtu.ac.in

2023 6th International Conference on Information Systems and Computer Networks (ISCON) | 979-8-3503-4696-1/23/$31.00 ©2023 IEEE | DOI: 10.1109/ISCON57294.2023.10112203

***Abstract*—Obstructive Sleep Apnea (OSA) is a respiratory sleep disorder. OSA is affecting a large population all around the world. Many OSA disorders remain undiagnosed due to monitor device limitations. In this paper, we have proposed a sleep monitoring model based on Convolutional Neural Network (CNN) and single-channel Electrocardiogram (ECG) that may be applied to portable OSA monitor devices. In the proposed model, the convolutional layers in CNN learn various scale features and Long Short-Term Memory (LSTM) learns the dependencies which are long-term such as transition rules of OSA. The proposed model is evaluated on the dataset and achieved an accuracy of 97.72% using CNN-LSTM classifier. The outcomes showed that the suggested technique performs better than the benchmarks.**

Keywords—Sleep Apnea Detection, Electrocardiogram, Convolutional Neural Network, Long Short-Term Memory.

I. INTRODUCTION

The condition known as obstructive sleep apnea (OSA) is characterised by recurrent respiratory arrests brought on by either partial or full upper airway blockage during sleeping. Hypopnea is a decrease in oxygen saturation, whereas apnea is a total cessation of breathing lasting at least 10 seconds [1]. Moreover, the blood regularly runs low on oxygen, causing individuals to wake up repeatedly. This typical sleeprelated respiratory problem affects 2% of adult women and 4% of adult men [2]. The main symptom of OSA is excessive daytime sleepiness.

According to the American Sleep Apnea Association, sleep apnea is a complicating factor in the death of 38,000 Americans yearly from heart disease. When asleep, those with sleep apnea face trouble in breathing or briefly cease breathing. Many times, this curable sleep disorder goes untreated. According to the American Heart Association Trusted Source, one in five Americans suffers from sleep apnea.

In an Israeli research [3] that compared the death rates from sleep apnea to that of the general population, only people between the ages of 30 and 50 had considerably higher (as shown in Fig. 1) mortality. Surprisingly, the mortality rate was Fig. 1. Mortality Rate in different Age group lower among patients over the age of 70 than in the overall population. A significant predictor of mortality, particularly from lung diseases, was body mass index (BMI), age, and comorbidities, but just not the extent of apnea.

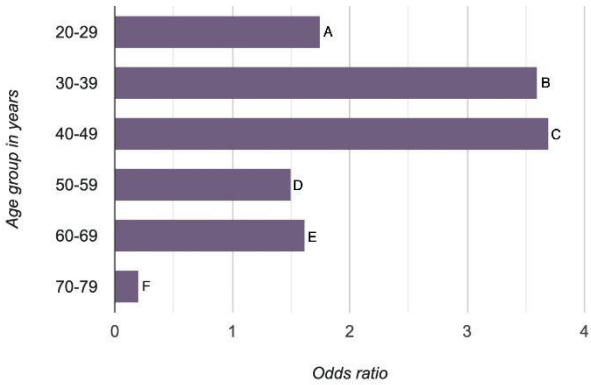

Fig. 1. Mortality rate in different age group

OSA-related sleep fragmentation is associated with memory loss, depression, sexual dysfunction, increased risk of work-related issues, and motor vehicle accidents [4]. Presently undiagnosed OSA may have a substantial impact on the occurrence of cardiovascular disorders such hypertension, stroke, and acute coronary syndrome, left ventricular hypertrophy.congestive heart failure. [5]. Early detection and treatment of OSA patients can minimize adverse health effects [6]. Therefore, it is essential to identify individuals at risk for OSA as early as possible. However, to diagnose OSA, Polysomnography (PSG) recordings must be examined over the course of a whole night in a sleep laboratory with specialised equipment and trained personnel. Accurate diagnosis of apnea episodes requires direct assessment of airflow and upper airway effort. Sleep labs are so rare that most patients go undetected. Therefore, if OSA can be identified from the ECG recordings, diagnosis of OSA can be easier and quick using the patient's ECG recordings.

There are two approaches of applying machine learning to biosignals. The first approach involves extracting the raw signals' time, frequency, and time-frequency domain features. This is a popular approach when the data comes from EEG signals. The second method directly feeds the time-series data into convolutional layers for extracting

Authorized licensed use limited to: NATIONAL INSTITUTE OF TECHNOLOGY TIRUCHIRAPALLI. Downloaded on March 24,2026 at 06:20:50 UTC from IEEE Xplore. Restrictions apply.

features, skipping the manual feature extraction step. The second strategy is employed by the suggested model.

This study proposes a one of its kind CNN-LSTM model that utilises bidirectional LSTM layers for more effective processing of the time-series ECG data. To the best of our knowledge, this domain has not yet been explored using a similar concept.

Below is a summary of the remaining content in the paper: Related literature is discussed in Section II. The methodology is described in Part III. The research strategy and findings are covered in Section IV. Section V serves as the paper's conclusion.

II. Related Work

The relationship between the respiratory variability and the Electrocardiograms (ECG) is first noticed in [7] . Heart rate variability (HRV) analysis in the time and frequency domain was used in this study to identify sleep apnea.

Khandoker et al. provide SVM based method for automatically identifying the obstructive sleep apnea classifier. [8]. A sleep apnea detection model based on SVM was proposed by Ramesh et al. [9]. This model was trained on 1479 datasets of clinical data collected regularly from the Wisconsin Sleep Cohort dataset [10].

Zarei et al. [11] presented an apporach for sleep apnea detection using minute-by-minute classification of an apnea ECG database. [12] used a conventional scalogram to train the sleep apnea detection model.

Martine et al. [13] constructed bivariate autoregressive model to analyze beat-by-beat power spectral densities in the HRV and R peak regions.The classification of events into apnea and non-apnea events was performed using the supervised learning classifier K-Nearest Neighbor (KNN).

III. METHODOLOGY USED

As seen in Fig. 2, the suggested approach for the categorization of sleep apnea is a four-step procedure. The major signal pre-processing stage comes after retrieving the dataset, and then the signals are input into a Convolutional Neural Network (CNN)-LSTM model. We employ convolutional layers because they enable us to train immediately on time-series data without first performing a manual feature extraction process. The outcome validation and analysis comes following the binary categorization of sleep apnea.

A. Model Architecture

A bidirectional CNN-LSTM model is suggested in this paper that effectively manages the sequential nature of ECG data. The first layer is a batch normalisation layer that normalises the data using the mean and standard deviation for effective and speedy loss convergence. Fig. 3 depicts the suggested CNN-LSTM model's architectural layout.

The BatchNormalization layer is followed by three Conv1D and MaxPooling1D blocks:

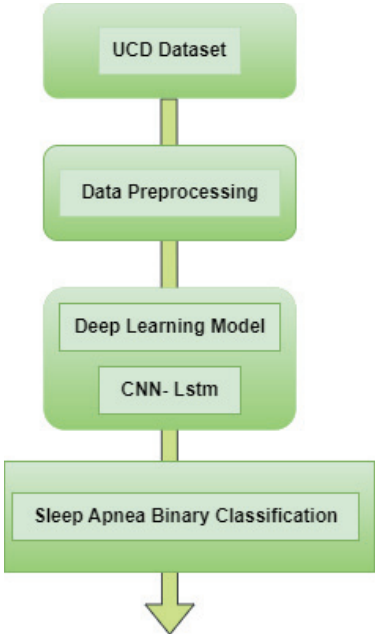

Fig. 2. Flow Diagram of Proposed Methodology

- The first block has a 1D Convolution with a kernel size of 100 and the strides set as 2. It outputs 3 filters. The following MaxPooling layer has a pool size of 2 and strides are set as 2.
- The second block has a 1D Convolution with a kernel size of 10 and strides set as 2. It outputs 50 filters. The following MaxPooling layer has the same configuration as the previous block.
- The third block has a 1D Convolution with a kernel size of 30 and strides set as 1. It outputs 30 filters. The following MaxPooling layer has a pool size of 2, and strides are set as 1.

All the Conv1D layers use the ReLU [14] activation function. Two Bidirectional LSTM follow the three Conv1DMaxPooling1D blocks:

- 32 output units and the tanh activation function are present in the first LSTM layer. Chaining it to the second LSTM layer requires setting the return sequences parameter's value to True.
- The second LSTM layer utilises the tanh activation function and generates 32 units as well.
- The output layer utilises softmax activation function and is a dense layer with two neurons for the binary classification issue. It employs L2 regularisation at a rate of 0.01 to prevent overfitting.

B. Components of Model

1) **CNN***:* In this model, 1-dimensional CNN [15] is used in the classification of the signal.

$$A_j^l = \sum_{i \epsilon b_j} X_{j,i}^l * x_i^{l-1} + a_j^l$$

Authorized licensed use limited to: NATIONAL INSTITUTE OF TECHNOLOGY TIRUCHIRAPALLI. Downloaded on March 24,2026 at 06:20:50 UTC from IEEE Xplore. Restrictions apply.

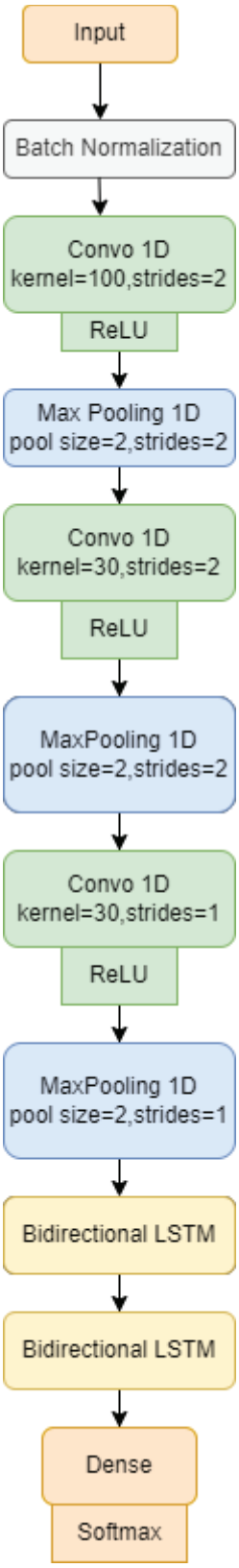

Fig. 3 CNN-LSTM Model Architecture

In expression (1), bj represents input map selection, $X_{j,i}$ represents the filter or weight connected to the link between neurons j and i in layer l. (*) stands for convolution operation. a_j^l indicates the bias connected to the neuron j^{th}in l layer. x_i^{l-1} denotes the output of ith neuron in (l-1) layer. To create the output map, we need the following definition of the activation function:

$$x_j^l = f(a_j^l)$$

The output maps use ReLU as their activation function. ReLU has good training performance when compared to other activation functions which is represented by:

$$f(a_j^l) = max(0, z_j^l)$$

Pooling layer is introduced after the convolutional layer. This layer decreased the number of feature maps, computational expenses and the network parameters, related to following layers by summing the subregions using specific functions, such as computing the lowest or biggest value.

2) **Batch Normalization**: An alteration in the allocation of every layer's inputs while CNN training will impact the outcomes overall successive levels [16]. When trying to train models with saturated non-linearities, this might be challenging. In order to resolve this issue, batch normalization (BN) was applied.

Let us consider A={a_1,a_2,a_3,.....,a_d} represents the input layer with the dimension d.

The following expression is used to calculate the mean of all input layers in MB(minibatch):

$$\mu = \frac{1}{\mathrm{MB}} \sum_{i=1}^{MB} x_i$$

In a minibatch, the input variance may be represented as follows.

$$\sigma^2 = \frac{1}{\mathrm{MB}} \sum_{i=1}^{MB} (x_i - \mu)^2$$

Batch normalization is given by:

$$Y_i = \alpha \bar{x_i} + \beta$$

Where $\bar{x_i} = x_i - \frac{\mu}{\sqrt{\epsilon + \sigma^2}}$. α and β represents learning rate.

Batch Normalization can increase a CNN's training effectiveness. In addition, Batch Normalization offers excellent accuracy and speeds up CNN training.

3) ***LSTM:*** LSTM [17] is used *to* recognize long-term dependencies in data. In Fig. 3, H_t, H_{t+1},H_{t-1} represent the states and X_t, X_{t+1},X_{t-1} represent the input while x stands for pointwise operation. The LSTM component's cell states and three gates allow it to selectively learn, unlearn, or retain knowledge from all entities. LSTM cell states contribute to the uninterrupted flow of information between entities by allowing only a limited number of linear interactions. Each component's inputs, outputs, and forget gates can add or remove cell state data. Oblivion gates use a sigmoidal activation function to select data to ignore from previous cell states. The input gate controls the flow of information about the state of the active cell by pointwise multiplying 'sigmoid' and 'tanh'. Thanks to cell states and three gates, LSTM devices can selectively learn, unlearn, or retain knowledge from all entities. LSTM cell states facilitate the uninterrupted flow of information between entities by allowing a minimal number of linear interactions. Each component has input, output, and forget gates that can add

Authorized licensed use limited to: NATIONAL INSTITUTE OF TECHNOLOGY TIRUCHIRAPALLI. Downloaded on March 24,2026 at 06:20:50 UTC from IEEE Xplore. Restrictions apply.

or remove cell state data. Information from the cell state before ignoring is selected by a forget gate using a sigmoidal activation function. The input gate employs pointwise multiplication of the "sigmoid" and "tanh" functions to regulate the flow of information about the active cell state.

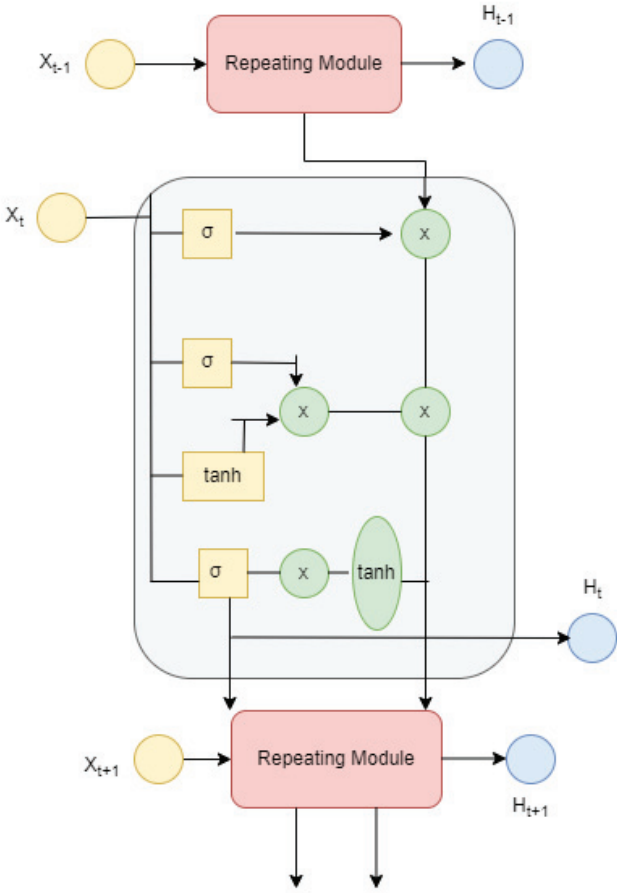

Figure 4 LSTM Architecture

C. Loss Function

Binary Cross Entropy Loss: The actual output of the class is validated using binary cross entropy, which only accepts values of 0 or 1 for each of the predicted probabilities. Therefore, based on how much they depart from the expected value, the probabilities are assessed.

Adam: It is a stochastic optimization approach that was initially introduced by Kingma et. al . It is based on adaptive estimation of first and second-order moments and is the most extensively used optimizer in Deep Learning. It has gained popularity as it efficiently deals with memory and several computations, as well suited for large feature spaces and datasets.

IV. EXPERIMENTS AND RESULTS

A. Dataset Used and Data Pre-processing

25 patients' polysomnographic recordings from the sleep apnea database at UCD [18] are used to evaluate the proposed model. The experiments make use of ECG data that were captured at 128 Hz. To categorise sleep seconds as apneic or non-apneic, sleep specialists' designations are employe. The entire dataset is split up into two sets, a training set and a testing set, at an 8:2 ratio. The training and testing sets have been made equal by oversampling members of the minority class or bouts of sleep apnea.. All patient records—aside from those in which there is no apnea—are used. No one of the 25 patients was taking medication for arrhythmias, independent dysfunction, or heart disease. All of the patients were between the ages of 28 and 68, having body mass indexes between 25.1 and 42.5 kg/m2, and had apnea-hypopnea indices between 1.7 and 1.7909. This dataset also contains each participant's core sleep apnea and arousal information.

B. Result Analysis

Table I shows the classification results of the various classifier models namely Scalogram based Convolutional Neural Network (SCNN), Support Vector Machine (SVM), Wavelet Transform and CNN-LSTM based model. The CNN-LSTM model performs significantly better than the benchmarks, as demonstrated in Table I.

TABLE I. CLASSIFICATION RESULTS

Classifier	Accuracy
SCNN[14]	81.86%
SVM[10]	92.85%
Wavelet Transform[13]	93.70%
CNN+LSTM	**97.72%**

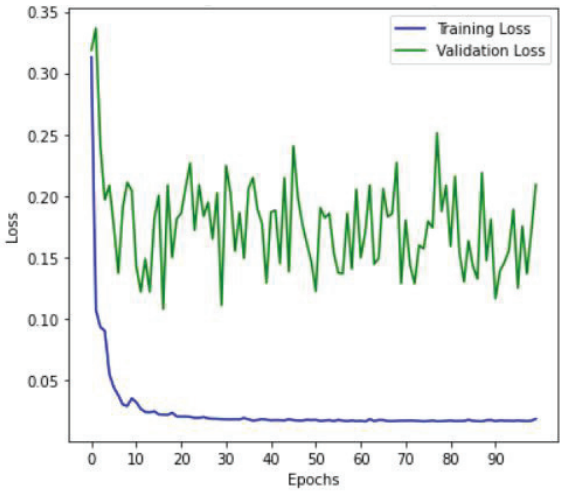

Fig. 5. Loss Curve

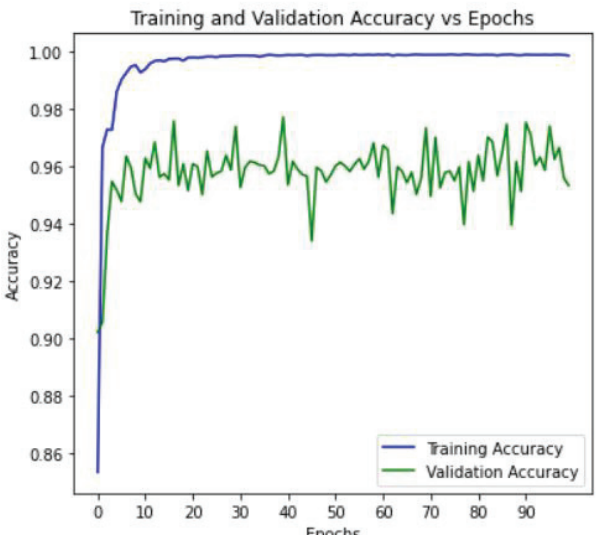

Fig. 6. Accuracy Score

Authorized licensed use limited to: NATIONAL INSTITUTE OF TECHNOLOGY TIRUCHIRAPALLI. Downloaded on March 24,2026 at 06:20:50 UTC from IEEE Xplore. Restrictions apply.

Fig. 5 depicts the training and testing loss curve. Training loss decreases smoothly and gradually, whereas Testing loss fluctuates. The accuracy curve of the training and testing set is similarly depicted in Fig. 6.

V. CONCLUSION

This study suggests a CNN-LSTM model to identify sleep apnea. Long-term dependencies are learned by LSTMs, and various scale characteristics are layered using convolutional networks. On the UCD dataset, his proposed CNN-LSTM model for two-class classification of sleep apnea detection is evaluated. When compared to the most recent benchmark models for the identification of sleep apnea, the suggested model performs significantly better than all of the benchmark models.

REFERENCES

[1] Xie, Baile, and Hlaing Minn. 'Real-Time Sleep Apnea Detection by Classifier Combination'. IEEE Transactions on Information Technology in Biomedicine 16, no. 3 (2012): 469–77.

[2] T Young, T., M. Palta, J. Dempsey, J. Skatrud, S. Weber, and S. Badr. 'The Occurrence of Sleep-Disordered Breathing among Middle-Aged Adults'. N. Engl. J. Med. 328, no. 17 (April 1993): 1230–35.

[3] Lavie, P. 'Mortality in Sleep Apnoea Syndrome: A Review of the Evidence'. European Respiratory Review 16, no. 106 (2007): 203–10.

[4] Coleman, Jack. 'Complications of Snoring, Upper Airway Resistance Syndrome, and Obstructive Sleep Apnea Syndrome in Adults'. Otolaryngol. Clin. North Am. 32, no. 2 (September 1999): 223–34.

[5] Young, T., P. Peppard, M. Palta, K. M. Hla, L. Finn, B. Morgan, and J. Skatrud. 'Population-Based Study of Sleep-Disordered Breathing as a Risk Factor for Hypertension'. Arch. Intern. Med. 157, no. 15 (1997): 1746–52.

[6] Dimsdale, J. E., J. S. Loredo, and J. Profant. 'Effect of Continuous Positive Airway Pressure on Blood Pressure : A Placebo Trial'. Hypertension 35, no. 1 Pt 1 (January 2000): 144–47.

[7] Penzel, T., J. McNames, A. Murray, P. de Chazal, G. Moody, and B. Raymond. 'Systematic Comparison of Different Algorithms for Apnoea Detection Based on Electrocardiogram Recordings'. Med. Biol. Eng. Comput. 40, no. 4 (July 2002): 402–7.

[8] Khandoker, Ahsan H., Marimuthu Palaniswami, and Chandan K. Karmakar. 'Support Vector Machines for Automated Recognition of Obstructive Sleep Apnea Syndrome From ECG Recordings'. IEEE Transactions on Information Technology in Biomedicine 13, no. 1 (2009): 37–48.

[9] Ramesh, Jayroop, Niha Keeran, Assim Sagahyroon, and Fadi Aloul. 'Towards Validating the Effectiveness of Obstructive Sleep Apnea Classification from Electronic Health Records Using Machine Learning'. Healthcare 9, no. 11 (2021).

[10] Zhang, Guo-Qiang, Licong Cui, Remo Mueller, Shiqiang Tao, Matthew Kim, Michael Rueschman, Sara Mariani, Daniel Mobley, and Susan Redline. 'The National Sleep Research Resource: Towards a Sleep Data Commons'. J. Am. Med. Inform. Assoc. 25, no. 10 (October 2018): 1351–58..

[11] Zarei, Asghar, and Babak Mohammadzadeh Asl. 'Automatic Detection of Obstructive Sleep Apnea Using Wavelet Transform and Entropy-Based Features From Single-Lead ECG Signal'. IEEE Journal of Biomedical and Health Informatics 23, no. 3 (2019): 1011–21.

[12] Mashrur, Fazla Rabbi, Md Saiful Islam, Dabasish Kumar Saha, S. M. Riazul Islam, and Mohammad Ali Moni. 'SCNN: Scalogram-Based Convolutional Neural Network to Detect Obstructive Sleep Apnea Using Single-Lead Electrocardiogram Signals'. Computers in Biology and Medicine 134 (2021): 104532.

[13] Mendez, Martin O., Davide D. Ruini, Omar P. Villantieri, Matteo Matteucci, Thomas Penzel, Sergio Cerutti, and Anna M. Bianchi. 'Detection of Sleep Apnea from Surface ECG Based on Features Extracted by an Autoregressive Model'. In 2007 29th Annual International Conference of the IEEE Engineering in Medicine and Biology Society. Lyon, France: IEEE, 2007.

[14] Agarap, Abien Fred. 'Deep Learning Using Rectified Linear Units (ReLU)', 2018.

[15] Wang, Zijie J., Robert Turko, Omar Shaikh, Haekyu Park, Nilaksh Das, Fred Hohman, Minsuk Kahng, and Duen Horng Chau. 'CNN Explainer: Learning Convolutional Neural Networks with Interactive Visualization', 2020.

[16] Ioffe, Sergey, and Christian Szegedy. 'Batch Normalization: Accelerating Deep Network Training by Reducing Internal Covariate Shift'. In Proceedings of the 32nd International Conference on Machine Learning, edited by Francis Bach and David Blei, 37:448–56. Proceedings of Machine Learning Research. Lille, France: PMLR, 07--09 Jul 2015.

[17] Hochreiter, Sepp, and Jürgen Schmidhuber. 'Long Short-Term Memory'. Neural Computation 9, no. 8 (1997): 1735–80.

[18] McNicholas, Walter, Liam Doherty, Silke Ryan, John Garvey, Patricia Boyle, and Eric Chua. 'St. Vincent's University Hospital / University College Dublin Sleep Apnea Database'. physionet.org, 2004.

Authorized licensed use limited to: NATIONAL INSTITUTE OF TECHNOLOGY TIRUCHIRAPALLI. Downloaded on March 24,2026 at 06:20:50 UTC from IEEE Xplore. Restrictions apply.